PRODUCT CATALOG

HIROSE ELECTRIC CO.,LTD.

MDF6 Series

3.5mm Pitch, Double Row, Compact Internal Power Connector (UL/CSA Standard Certified Product)

Power Supply

Positive-Lock

Compact

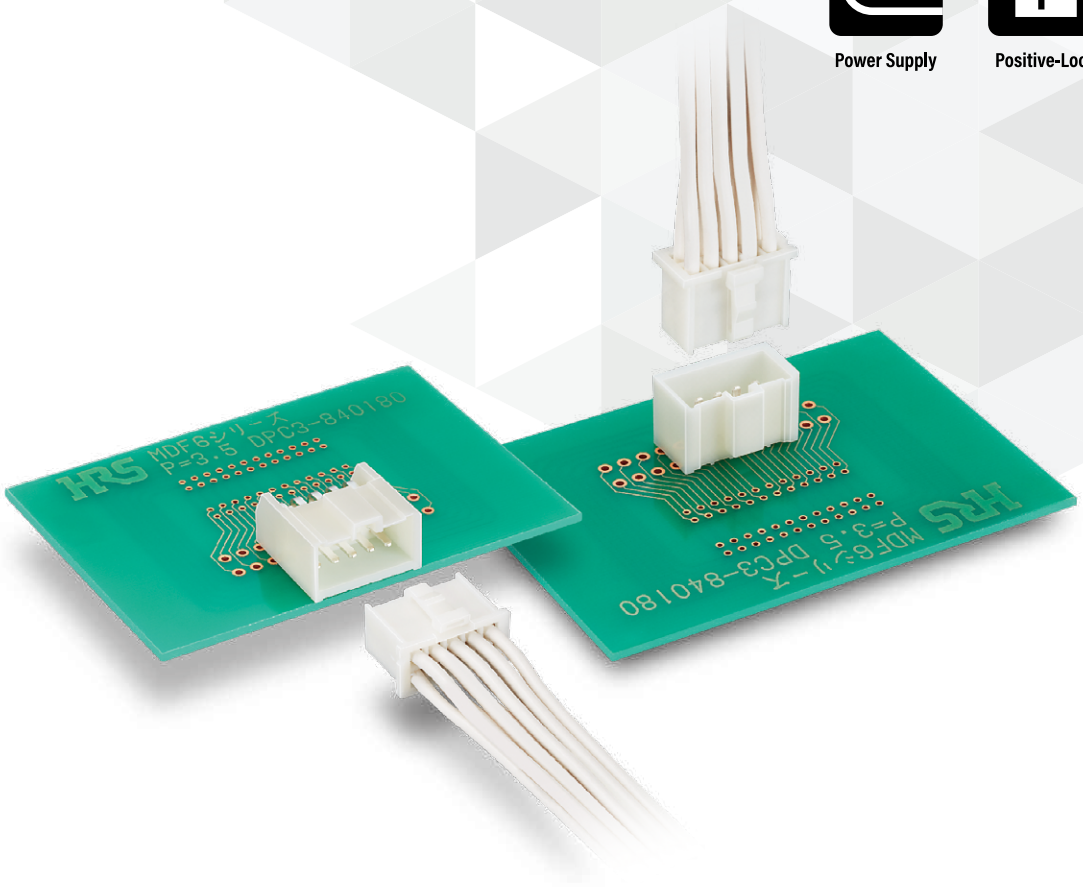

Aug.1.2023 Copyright 2023 HIROSE ELECTRIC CO., LTD. All Rights Reserved.

Feb. 2021 ②

Downloaded from Arrow.com.

Features

1. 3.5mm pitch compact connector

MDF6 Series is a compact, space-saving power connector with a 3.5mm × 5mm pitch set in a double row alignment configuration.

2. 7A Current Capacity

Compact power connector that maintains a current capacity of 7A when using 16 AWG (UL/CSA standard is 6A).

3. Box Type Header

The box type header is highly resistant to prying and is polarized to prevent mis-insertion.

4. Internal Positive Lock

Secure mating with enhanced safety is secured by the internal positive lock.

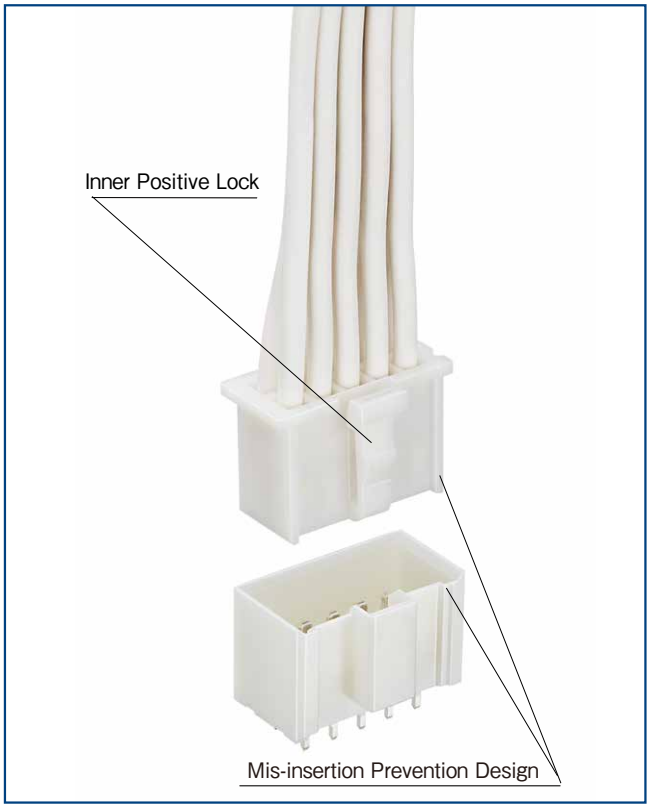

Applications

Internal power supply for various devices

Aug.1.2023 Copyright 2023 HIROSE ELECTRIC CO., LTD. All Rights Reserved.

Downloaded from Arrow.com.

Product Specifications

Rated Current (Note 1)	16 AWG	18 AWG	20AWG	22 AWG	Operating Temperature (Note 2)	-30 to 85℃
	7A/pin	6A/pin	5A/pin	4A/pin	Operating Humidity Range (Note 3)	40 to 80%
Rated Voltage	300V AC/DC				Storage Temperature Range	-10 to 60℃
					Storage Humidity Range	40 to 70%

UL/CSA	Rated Current	16 AWG	18 AWG	20 AWG	22 AWG
		6A/pin	6A/pin	4A/pin	4A/pin
	Rated Voltage	UL : 250V AC CSA : 30V AC			

■ UL CSA Safety Standard File No.
UL : E52653
CSA : LR95109

Item	Specifications	Conditions
Insulation Resistance	1000MΩ Min.	500V DC
Withstanding Voltage	No flashover or insulation breakdown.	1,500V AC per min.
Contact Resistance	30mΩ Max.	1mA
Vibration Resistance	No electrical discontinuity of 1μs or more	Frequency : 10 to 55Hz, single amplitude of 0.75mm, 10 cycles in each of the 3 directions.
Humidity (Steady state)	Contact Resistance : 30mΩ Max. Insulation Resistance : 1000MΩ Min.	96 hours at temperature of 40±2℃ and humidity of 90% to 95%
Temperature Cycle	Contact Resistance : 30mΩ Max. Insulation Resistance : 1000MΩ Min.	(-55℃ : 30 minutes → 5 to 35℃ : 10 minutes → 85℃ : 30 minutes → 5 to 35℃ : 10 minutes) 5 cycles
Mating Durability	Contact Resistance : 30mΩ Max.	Tin Plated : 30 cycles
Soldering Heat Resistance	No deformation of components affecting performance.	Flow : 250℃ for 10 seconds Manual soldering : 300℃ for 3 seconds

Note 1 : The rated current changes depending on the cable used. Only the rated current of the header is 7A.
Note 2 : Includes temperature rise due to current flow.
Note 3 : No condensing.
Note 4 : Information contained in this catalog represents general requirements for this Series. Contact us for the drawings and specifications for a specific part number shown.

Material / Finish

Product	Part	Material	Finish	Remarks	RoHS2
Crimp Socket	Insulator	Polyamide Resin	Natural (White)	UL94V-0	○
Socket Crimp Contact	Contact	Phosphor Bronze	Tin Plating	-	
Pin Header	Insulator	Polyamide Resin	Natural (White)	UL94V-0	
	Contact	Brass	Tin Plating	-	

Aug.1.2023 Copyright 2023 HIROSE ELECTRIC CO., LTD. All Rights Reserved.

Downloaded from Arrow.com.

Product Number Structure

Connector

MDF6 - # DS - 3.5 C

❶ ❷ ❸ ❹ ❺

❶ Series Name	MDF6	❹ Contact Pitch	3.5mm
❷ No. of Pos.	4 to 20	❺ Contact Type	C : Crimp Socket DSA : Straight Pin Header DS : Right Angle Pin Header
❸ Connector Type	DS : Double Row Socket DP : Double Row Pin Header		

Contact

MDF6 - 1618 SCF

❶ ❷

❶ Applicable Cable Size	1618 : 16-18 AWG 2022 : 20-22 AWG	❷ Packaging Type	SCF : Socket Contact, Reel SC : Socket Contact, Pack

Aug.1.2023 Copyright 2023 HIROSE ELECTRIC CO., LTD. All Rights Reserved.

Downloaded from Arrow.com.

Double Row Socket

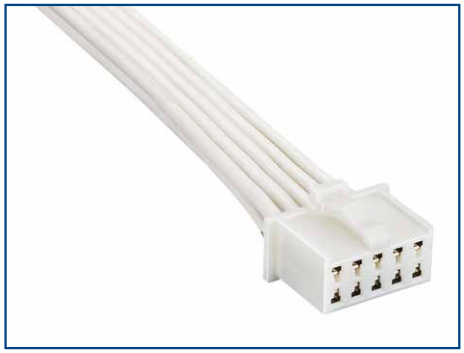

Shown with crimp contacts assembled.

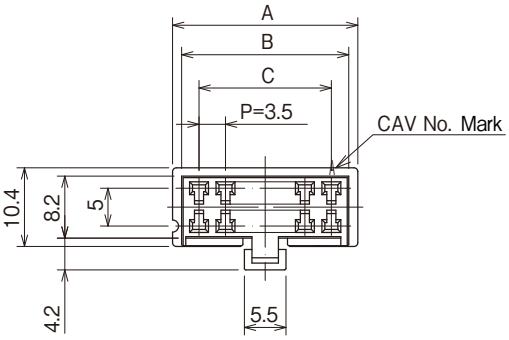

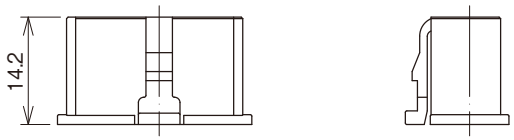

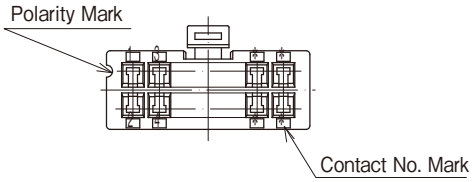

Part No.	HRS No.	No. of Pos.	A	B	C	Purchase Unit
MDF6-4DS-3.5C	CL0547-0074-1-00	4	10.5	8.1	3.5	100pcs per bag
MDF6-6DS-3.5C	CL0547-0075-4-00	6	14.0	11.6	7.0	
MDF6-8DS-3.5C	CL0547-0076-7-00	8	17.5	15.1	10.5	
MDF6-10DS-3.5C	CL0547-0077-0-00	10	21.0	18.6	14.0	
MDF6-12DS-3.5C	CL0547-0078-2-00	12	24.5	22.1	17.5	
MDF6-14DS-3.5C	CL0547-0079-5-00	14	28.0	25.6	21.0	
MDF6-16DS-3.5C	CL0547-0080-4-00	16	31.5	29.1	24.5	
MDF6-18DS-3.5C	CL0547-0081-7-00	18	35.0	32.6	28.0	
MDF6-20DS-3.5C	CL0547-0082-0-00	20	38.5	36.1	31.5	

Aug.1.2023 Copyright 2023 HIROSE ELECTRIC CO., LTD. All Rights Reserved.

Downloaded from Arrow.com.

Socket Crimp Contact

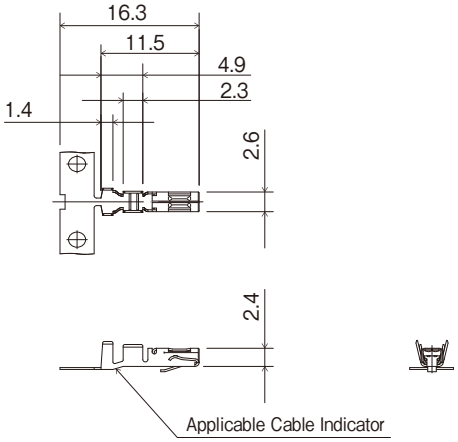

Part No.	HRS No.	Applicable Cable AWG Size	Applicable Cable Jacket Diameter	Type	Purchase Unit
MDF6-1618SCF	CL0547-0070-0-00	16-18 AWG	φ 2.5 to 2.0	Reel Contact	5000pcs per reel
MDF6-1618SC	CL0547-0071-3-00			Loose Contact	100pcs per bag
MDF6-2022SCF	CL0547-0072-6-00	20-22 AWG	φ 1.9 to 1.5	Reel Contact	5000pcs per reel
MDF6-2022SC	CL0547-0073-9-00			Loose Contact	100pcs per bag

● Applicable Cable (Tin Plated Annealed Copper Wire)

Conductor Size (Wire Construction)	Jacket Diameter	Recommended Cable	Strip Length
16 AWG (26/0.254mm)	φ 2.5 to 2.0	UL1061, UL1007	2.7 to 4.4mm
18 AWG (34/0.18mm)			
20 AWG (21/0.18mm)	φ 1.9 to 1.5		
22 AWG (17/0.16mm)			

Note : Please contact a Hirose sales representative when using cables other than those specified.

Aug.1.2023 Copyright 2023 HIROSE ELECTRIC CO., LTD. All Rights Reserved.

Downloaded from Arrow.com.

Double Row Pin Header : Straight Type

●Applicable Through Hole Diameter of PCB : $\phi 1.3^{+0.1}_{0}$
●Applicable PCB Thickness : 1.6±0.2

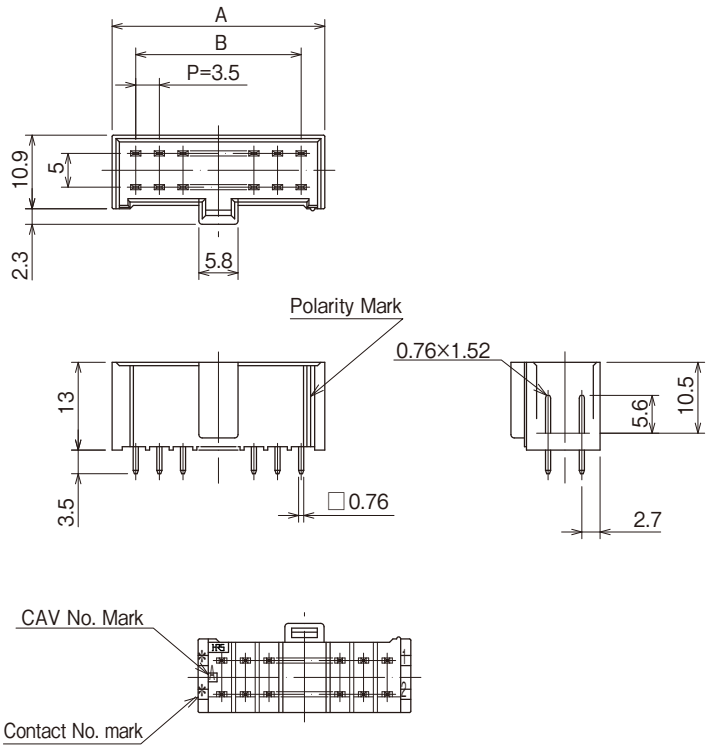

Part No.	HRS No.	No. of Pos.	A	B	Purchase Unit
MDF6-4DP-3.5DSA(23)	CL0547-0083-2-23	4	10.5	3.5	100pcs per bag
MDF6-6DP-3.5DSA(23)	CL0547-0084-5-23	6	14.0	7.0	
MDF6-8DP-3.5DSA(23)	CL0547-0085-8-23	8	17.5	10.5	
MDF6-10DP-3.5DSA(23)	CL0547-0086-0-23	10	21.0	14.0	
MDF6-12DP-3.5DSA(23)	CL0547-0087-3-23	12	24.5	17.5	
MDF6-14DP-3.5DSA(23)	CL0547-0088-6-23	14	28.0	21.0	
MDF6-16DP-3.5DSA(23)	CL0547-0089-9-23	16	31.5	24.5	
MDF6-18DP-3.5DSA(23)	CL0547-0090-8-23	18	35.0	28.0	
MDF6-20DP-3.5DSA(23)	CL0547-0091-0-23	20	38.5	31.5	

Aug.1.2023 Copyright 2023 HIROSE ELECTRIC CO., LTD. All Rights Reserved.

Downloaded from Arrow.com.

Double Row Pin Header : Right Angle Type

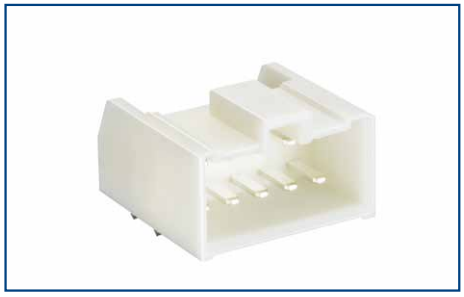

●Applicable Board Hole Diameter of PCB : $\phi 1.3^{+0.1}_{0}$
●Applicable PCB Thickness : 1.6±0.2

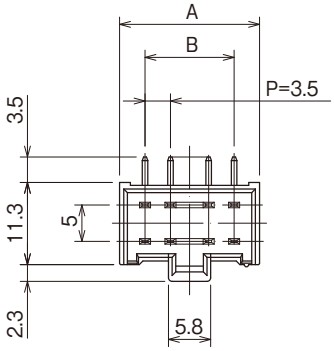

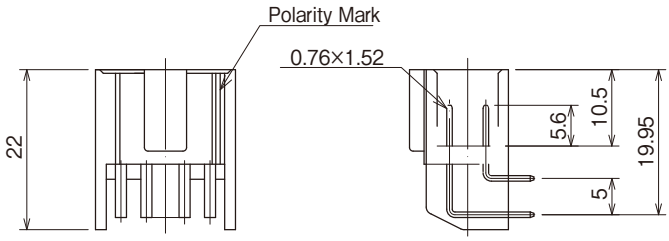

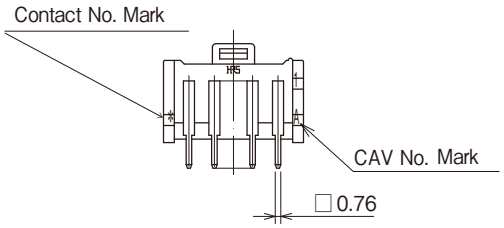

Part No.	HRS No.	No. of Pos.	A	B	Purchase Unit
MDF6-4DP-3.5DS(23)	CL0547-0270-0-23	4	10.5	3.5	100pcs per bag
MDF6-6DP-3.5DS(23)	CL0547-0271-2-23	6	14.0	7.0	
MDF6-8DP-3.5DS(23)	CL0547-0272-5-23	8	17.5	10.5	
MDF6-10DP-3.5DS(23)	CL0547-0273-8-23	10	21.0	14.0	

Application Pattern

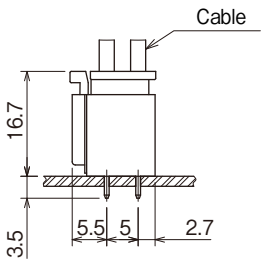

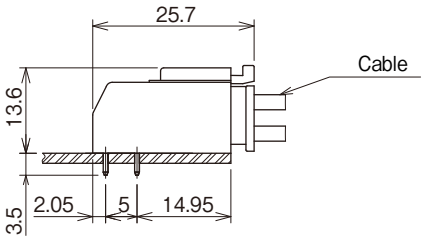

Aug.1.2023 Copyright 2023 HIROSE ELECTRIC CO., LTD. All Rights Reserved.

Downloaded from Arrow.com.

Applicable Crimping Tool

Type	Part No.	HRS No.	Applicable Contact
Main Press Unit	CM-105C	CL0901-0001-0-00	-
Applicator	AP105-MDF6-1618S	CL0901-4512-4-00	MDF6-1618SCF
	AP105-MDF6-2022S	CL0901-4513-7-00	MDF6-2022SCF
Manual Crimping Tool	MDF6-TA1618HC	CL0550-0203-5-00	MDF6-1618SC
	MDF6-TA-2022HC	CL0550-0204-8-00	MDF6-2022SC
Extraction Tool	DF-C-PO(A)	CL0550-0170-8-00	MDF6-####SC(F)

Note 1 : Issues caused by tools other than those specified by Hirose are outside the scope of warranty.
Note 2 : Please conduct crimping work according to the "Crimp Quality Standard (ETAD-H0792-00)" and "Crimp Condition Table".
Note 3 : When non-authorized tools are used, please consult with Hirose sales representative about provision of the drawing of the crimping tool.

Precautions When Crimping

■ Required Documents Prior to Crimping

The work-related documents listed below are required before beginning cable assembly (The ● mark indicates required documents). Please contact a Hirose sales representative if you do not have these documents.

Document Title	Description	Automatic Crimping Machine	Hand Crimping Tool	Reference
1. Crimping Machine Main Unit Instruction Manual	Explanation of main press machine unit	●	-	Bundled with purchase of main press machine unit.
2. Applicator Instruction Manual	Crimping Method	●	-	Bundled with purchase of applicator.
3. Applicator Spare Parts List	Explanation for Applicator Installation	●	-	
4. Crimp Conditions	Standard crimp height and tensile strength values	●	-	
5. Crimp Quality Standards	Various standards for crimping conditions	●	-	
6. Operating Instructions for Hand Tool	Crimping method, standard crimp height and tensile strength values	-	●	Bundled with purchase of hand tool.

■ Tools

Use the tools designated by Hirose when performing crimping. Crimping performed with tools other than those designated is outside the scope of warrantly. The operating instruction manual for the crimping machine and applicator are provided. Be sure to carefully read the operating instructions before beginning work.

■ Applicable Cables

Check that the cables to be used are within the applicable range. If you intend to use a cable other than those recommended, contact a sales representative.

[Precautions]

・Cables applicable to crimping connectors are tin-plated stranded soft-copper wire.
・Avoid crimping solid wire, wires with polyester threads or tin coated wires.
・Avoid crimping two cables together.
・The crimp height setting values (Note) may vary between tin-plated and gold-plated terminals even if the same electric wires are used.
・The crimp height setting values (Note) may vary depending on the difference in the core wire configuration even if the computed cross-sectional area is the same.

Note : The crimp height is an important item that determines crimping quality. We execute crimping tests for each electric wire to ensure the optimal value for the crimp height with high precision, thereby ensuring optimal setup values.

Aug.1.2023 Copyright 2023 HIROSE ELECTRIC CO., LTD. All Rights Reserved.

Downloaded from Arrow.com.

Precautions

1.Cleaning Conditions	Please refer to the "Wire-to-Board Connector Use Handbook".
2.Connection Conditions	Please refer to the "Wire-to-Board Connector Use Handbook".
3.Precautions	■ The color of the plastic molding may differ slightly depending on product lot and future storage conditions but this does not affect the product performance.
4.Handling	Please refer to the following documents when handling the product. ■ Crimp Quality Standard (ATAD-H0792-00) ■ Wire-to-Board Connector Use Handbook

Aug.1.2023 Copyright 2023 HIROSE ELECTRIC CO., LTD. All Rights Reserved.

While taking in consideration

Specifications mentioned in this catalog are reference values.
When considering to order or use this product, please confirm the "Drawing" and "Product Specifications" sheets.
Use an appropriate cable when using the connector in combination with cables.
If considering usage of a non-specified cable, please contact your sales representative.
If assembly process is done by jigs & tools which are not identified by Hirose assurance will not be given.
Please consult with your Hirose sales representative if you are planning to use the product for any of the following applications. (Automotive, medical, public infrastructure, aerospace/defense, etc.)
Hirose will consider the validity of the warranty depending on the conditions.

Downloaded from Arrow.com.

Aug.1.2023 Copyright 2023 HIROSE ELECTRIC CO., LTD. All Rights Reserved.

[JAPAN]

Headquarters
HIROSE ELECTRIC CO., LTD.
Phone : +81-45-620-7410
http://www.hirose.com

[U.S.A]

US Headquarters / CHICAGO Office
HIROSE ELECTRIC (U.S.A.), INC.
Phone : +1-630-282-6700
http://www.hirose.com/us/

SAN JOSE Office
HIROSE ELECTRIC (U.S.A.), INC.
Phone : +1-408-253-9640
http://www.hirose.com/us/

DETROIT Office (AUTOMOTIVE)
HIROSE ELECTRIC (U.S.A.), INC.
Phone : +1-734-542-9963
http://www.hirose.com/us/

BOSTON Office
HIROSE ELECTRIC (U.S.A.), INC.
Phone : +1-978-655-9850
http://www.hirose.com/us/

DALLAS Office
HIROSE ELECTRIC (U.S.A.), INC.
Phone : +1-972-324-3370
http://www.hirose.com/us/

IRVINE Office
HIROSE ELECTRIC (U.S.A.), INC.
Phone : +1-949-930-3750
http://www.hirose.com/us/

[THE NETHERLANDS]

EU Headquarters / AMSTERDAM OFFICE
HIROSE ELECTRIC EUROPE B.V.
Phone : +31-20-6557460
http://www.hirose.com/eu/

[UNITED KINGDOM]

UK Branch
HIROSE ELECTRIC EUROPE B.V.
Phone : +44-1908-202050
http://www.hirose.com/eu/

[GERMANY]

GERMAN Branch / STUTTGART Office
HIROSE ELECTRIC EUROPE B.V.
Phone : +49-711-456002-1
http://www.hirose.com/eu/

NUREMBERG Office
HIROSE ELECTRIC EUROPE B.V.
Phone : +49-911-326889-63
http://www.hirose.com/eu/

HANOVER Office
HIROSE ELECTRIC EUROPE B.V.
Phone : +49-511-978261-30
http://www.hirose.com/eu/

[FRANCE]

PARIS Office
HIROSE ELECTRIC EUROPE B.V.
Phone : +33-1-85764886
http://www.hirose.com/eu/

[ITALY]

MILAN Office
HIROSE ELECTRIC EUROPE B.V.
Phone : +39-02-36636350
http://www.hirose.com/eu/

[CHINA]

CHINA Headquarters / SHANGHAI Branch
HIROSE ELECTRIC (CHINA) CO., LTD.
Phone : +86-21-6391-3355
http://www.hirose.com/cn/

SHENZHEN Branch
HIROSE ELECTRIC (CHINA) CO., LTD.
Phone : +86-755-8207-0851
http://www.hirose.com/cn/

BEIJING Branch
HIROSE ELECTRIC (CHINA) CO.,LTD.
Phone : +86-10-5165-9332
http://www.hirose.com/cn/

GUANGZHOU Branch
HIROSE ELECTRIC (CHINA) CO.,LTD.
Phone : +86-180-9895-1861
http://www.hirose.com/cn/

[HONG KONG]

HONG KONG Office
HIROSE ELECTRIC HONGKONG TRADING CO., LTD.
Phone : +852-2803-5338
http://www.hirose.com/hk/

[TAIWAN]

TAIWAN Office
HIROSE ELECTRIC (TAIWAN) CO., LTD.
Phone : +886-2-2555-7377
http://www.hirose.com/tw/

[KOREA]

KOREA Office
HIROSE KOREA CO.,LTD.
Phone : +82-31-496-7000
http://www.hirose.co.kr/

[SINGAPORE]

SINGAPORE Office
HIROSE ELECTRIC SINGAPORE PTE. LTD.
Phone : +65-6324-6113
http://www.hirose.com/sg/

[THAILAND]

BANGKOK Liaison Office
HIROSE ELECTRIC SINGAPORE PTE. LTD.
Phone : +66-2-686-1255
http://www.hirose.com/sg/

[MALAYSIA]

PENANG Representative Office
HIROSE ELECTRIC SINGAPORE PTE. LTD.
Phone : +60-4-648-5536
http://www.hirose.com/sg/

[INDIA]

BANGALORE Office
HIROSE ELECTRIC INDIA PVT. LTD.
Phone : +91-80-4120-1907
http://www.hirose.com/sg/

DELHI Office
HIROSE ELECTRIC INDIA PVT. LTD.
Phone : +91-120-660-8018
http://www.hirose.com/sg/

HRS **HIROSE ELECTRIC CO.,LTD.** 2-6-3,Nakagawa Chuoh,Tsuzuki-Ku,Yokohama-Shi 224-8540,JAPAN
https://www.hirose.com https://www.hirose-connectors.com

※The contents of this catalog are current as of date of 2/2021. Contents are subject to change without notice for the purpose of improvements.

Downloaded from Arrow.com.

M E M O

Aug.1.2023 Copyright 2023 HIROSE ELECTRIC CO., LTD. All Rights Reserved.

Downloaded from Arrow.com.