capcom

CAPACITORS FOR AC AND DC GENERAL PURPOSE APPLICATIONS

Proven EIA-456-A Compliant 60,000 Hour Reliability Industry Standard

RoHS Compliant

www.capcom.mx

Downloaded from Arrow.com.

Table of contents

capcom

Descriptive Information 2

Product Safety 4

General Purpose AC Capacitors – GEM III

240 & 370

Product Specifications 6
Single Ratings – 1 Section 7
Application Notes / Data 9

600 Volts AC

Product Specifications 12
Single Ratings – 1 Section 13
Application Notes / Data 14

600 Volts AC (series Section)

Product Specifications 17
Single Ratings – 1 Section 18
Application Notes / Data 19

1000 Volts DC Peak

Product Specifications 22
Single Ratings – 1 Section 23

Cross Reference - 600 Volts AC 24

Capacitor Label 26

Downloaded from Arrow.com.

Capcom Capacitors
Capacitors for Gereal Purpose Applications

Genteq metallized film capacitors are unsurpassed in terms of size, weight, performance, and reliability for AC applications. Capcom over 60 year of capacitor manufacturing experience to the product lines described in this publication. These capacitors represent the best in product design for long-term reliability and safe operation. Capcom´s materials, product, and process development work continue to provide capacitor users with outstanding total value.

The specific products in this bulletin are aimed at market / application segments for General Purpose, Power Supply, and Electronic Power Conversion.

The GEM III General Purpose Capacitors are used for filtering on a wide variety of light industrial equipment. The conversion of electrical power and uninterruptible power supplies and drive control systems requires filter capacitors. An application note is included to help customers in the

Downloaded from Arrow.com.

GEM III Construction

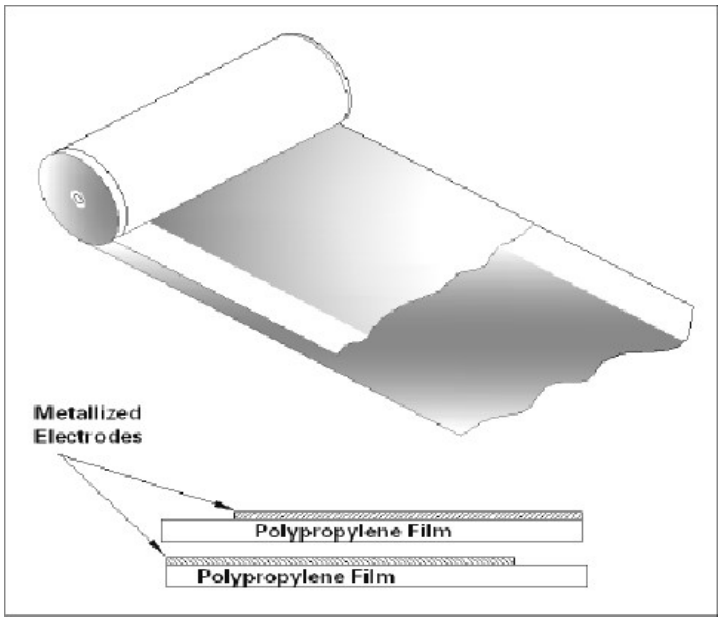

GEM III Series Construction

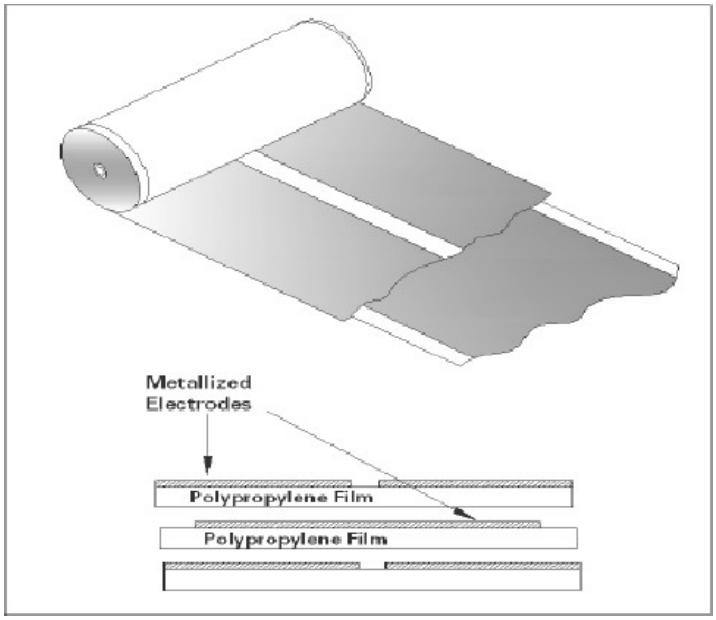

Capcom´s GEM III capacitors are manufactured with high-grade metallized polypropylene film. This film is in the range of 5 to 10 microns thick, depending on the application, voltage, and conditions. The metallized electrode is several hundred angstroms thick.

The film is wound into capacitor rolls on high-speed, high- precision machines. The winding is extremely tight so that there is not enough space between the layers for corona (localized partial electrical discharges) to occur. The rolls are sprayed on both ends with metal to make the connection to the extremely thin edges of the metallized electrodes. This process is critical to the quality and performance of the capacitors.

The rolls are assembled in metal cases, Capcom´s proprietary dielectric liquid is introduced under vacuum, and the capacitors are sealed. They are then subjected to 100% electrical testing for capacitance, dissipation factor, and high potential electrical withstand, both terminal-to-terminal and terminal-to-case.

Downloaded from Arrow.com.

Pressure Sensitive Interrupter

All the capacitors listed in this publication contain Capcom´s Pressure Sensitive Interrupter (PSI). This device, is designed to sense the build-up of pressure within the capacitor if a fault occurs and to interrupt the internal electrical connections before the case can rupture.

The PSI carries U.L.* recognition for applications where the specified fault currents are not exceeded. The fault current is the maximum current that is available from the circuit to flow through the capacitor if the capacitor were to become a short circuit with zero impedance. It is the responsibility of the capacitor user to determine what the available fault current is for a particular application.

In the Catalog Number listings a four character U.L. Code, Pxxx, is given. This number is part of the listing for Capcom in U.L. File No. E322597. When applying to U.L. for approvals or recognition of equipment using these capacitors refer to the Pxxx number and not the Catalog Number of the capacitor in question.
Proper operation of the PSI requires that the cover be able to expand without restriction. The following mounting considerations should be noted in mounting the these capacitors.

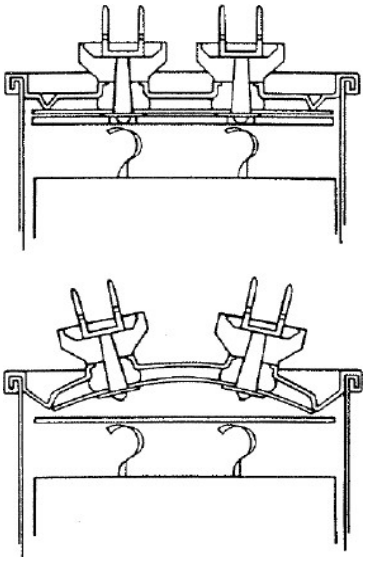

*Underwriter´s Laboratory

Downloaded from Arrow.com.

Mounting Consideretarions

Vertical Clereance

There must be sufficient clearance between the tops of the terminals (and/or the assembled wire connectors) and a plane perpendicular to the capacitor terminals. This clearance must be at least 0.5 inches plus electrical spacing requirements of the end application.

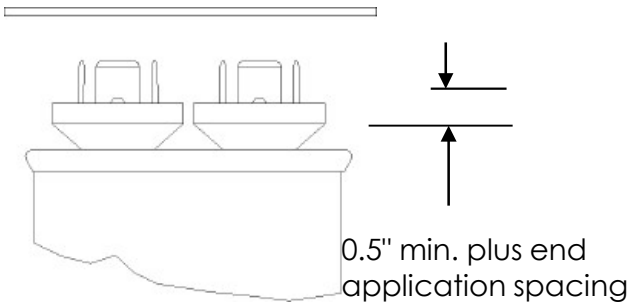

Case Style	a	b
A	2.00	1.00
B	2.25	1.25
C	2.50	1.62
D	3.25	1.62

Case Style	a
P	1.62
S	1.88
T	2.38

Cut-Out Clereance

In certain instances, capacitors are mounted with the top of the capacitors case resting against the chassis and the terminals protruding through the chassis. Care must be taken to see that the cutout in the chassis is large enough. The following dimensions are recommended.

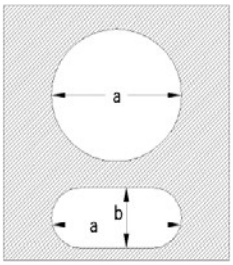

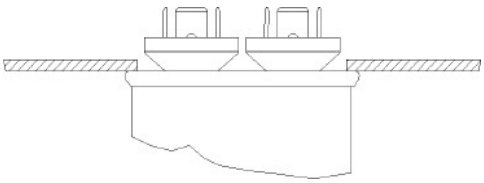

Downloaded from Arrow.com.

General Purpose AC Capacitors – GEM III 240 & 370 VAC

capcom

This series of GEM III is **designed specifically for applications such as AC filters where harmonic frequencies greater than 60Hz are common.** Application Data is provided starting on page 9 that gives the Equivalent Series Resistance (ESR) for these units. This allows the user to calculate the losses for each design / application and to ensure that they are kept within the permissible limits. Any questions regarding the suitability of a capacitor for a particular application may be referred to Capcom Engineers by contacting your Capcom sales representative.

SPECIFICATIONS:

Available Capacitance Range:	2 to 120µF (Specail ratings upon request)
Capacitance Tolerance	±6%
Capacitance Variation with Temperature:	See Chart M-3 on page 11
Rated Voltage:	See Rating Tables. Rating is the 50/60Hz RMS voltage for a sinusoidal waveform. For other wave forms refer to the Application Note on page 9. (Special ratings
Leakage Current:	30µA maximum
Frequency	50/60 Hz. For higher frequencies refer to the Application Note on page 10.
Operating Temperature:	-40°C to +70°C
Storage Temperature:	-40°C to +90°C
Operating Life:	60,000 hours with 94% survival (In accordance with the EIA-456 Industry Standard)
Dissipation Factor:	0.1% maximum
Case Material/Finish:	Unpainted Aluminum case, terne plate steel cover.
Terminations:	Combo' terminal: 0.250" x 0.031" quick connect blade:
Dielectric Fluid:	Proprietary dielectric oil
Internal Protection:	UL recognized Pressure Sensitive Interrupter.

Case Style	Capcom Code	Generic UL Code
A	P921	A10000AFC
P	P965	P10000AFC
S	P968	S10000AFC
T	P969	T10000AFC

See Ratings Table for Capcom´s UL Code Number listed under Capcom's UL File E322597. For UL submittals
with these capacitors, use the RBC 'Pxxx' number not the Catalog Number. The corresponding generic UL designation that includes the Available Faults Current (AFC) rating is given below. All these capacitors are capable of interrupting available fault currents of up to 10,000 amperes.

Downloaded from Arrow.com.

Voltage (VAC)	Capacitance (µF)	Catalog Number	Case Style	Base Size (in.)	Can Type	Height C (in.)	UL Code
240	15.0	97F8036	P	1.75	Round	2.88	P965
	25.0	97F8037	P	1.75	Round	2.88	P965
	30.0	97F8038	P	1.75	Round	3.88	P965
	35.0	97F8039	P	1.75	Round	3.88	P965
	40.0	97F8040	P	1.75	Round	3.88	P965
	45.0	97F8041	P	1.75	Round	4.75	P965
	50.0	97F8042	P	1.75	Round	4.75	P965
	55.0	97F8043	P	1.75	Round	4.75	P965
	60.0	97F8044	S	2.00	Round	4.75	P968
	65.0	97F8045	S	2.00	Round	4.75	P968
	70.0	97F8046	S	2.00	Round	4.75	P968
	75.0	97F8047	S	2.00	Round	4.75	P968
	80.0	97F8048	T	2.50	Round	3.88	P969
	85.0	97F8049	T	2.50	Round	3.88	P969
	90.0	97F8050	T	2.50	Round	3.88	P969
	95.0	97F8051	T	2.50	Round	4.75	P969
	100.0	97F8052	T	2.50	Round	4.75	P969
	120.0	97F8053	T	2.50	Round	4.75	P969

Case Style P, S, and T

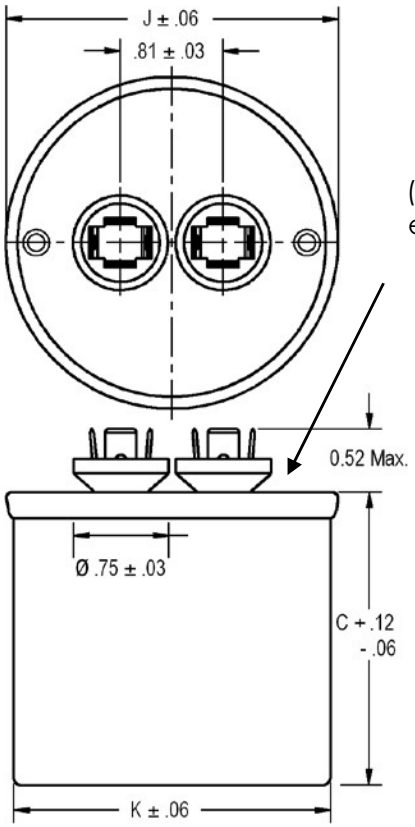

(4) .250 x .031 Blades
er terminal except (3)
on case style P

Case	K	J
P	1.75	1.88
S	2.00	2.12
T	2.50	2.62

Downloaded from Arrow.com.

Gen Purpose AC Capacitors – GEM III Single Ratings – 1 Section

capcom

Voltage (VAC)	Capacitance (µF)	Catalog Number	Case Style	Base Size (in.)	Can Type	Height C (in.)	UL Code
370	3.0	97F8054	A	1.25	Oval	2.12	P921
	4.0	97F8055	A	1.25	Oval	2.12	P921
	5.0	97F8056	A	1.25	Oval	2.88	P921
	6.0	97F8057	A	1.25	Oval	2.88	P921
	7.5	97F8058	A	1.25	Oval	2.88	P921
	10.0	97F8059	A	1.25	Oval	3.88	P921
	12.5	97F8060	A	1.25	Oval	3.88	P921
	15.0	97F8061	P	1.75	Round	2.88	P965
	17.5	97F8062	P	1.75	Round	2.88	P965
	20.0	97F8063	P	1.75	Round	3.88	P965
	25.0	97F8064	P	1.75	Round	3.88	P965
	30.0	97F8065	P	1.75	Round	3.88	P965
	35.0	97F8066	P	1.75	Round	4.75	P965
	40.0	97F8067	P	1.75	Round	4.75	P965
	45.0	97F8068	S	2.00	Round	4.75	P968
	50.0	97F8069	S	2.00	Round	4.75	P968
	55.0	97F8070	S	2.00	Round	4.75	P968
	60.0	97F8071	T	2.50	Round	3.88	P969
	65.0	97F8072	T	2.50	Round	3.88	P969
	70.0	97F8073	T	2.50	Round	4.75	P969

Case Style P, S, and T

(4) .250 x .031 Blades per terminal except (3) on case style P

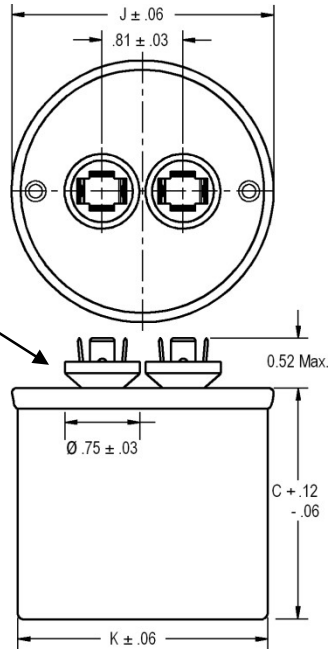

Case Style	K	J
GEM III	1.75	1.88
S	2.00	2.12
T	2.50	2.62

Case Style A

(4) .250 x .031 Blades per

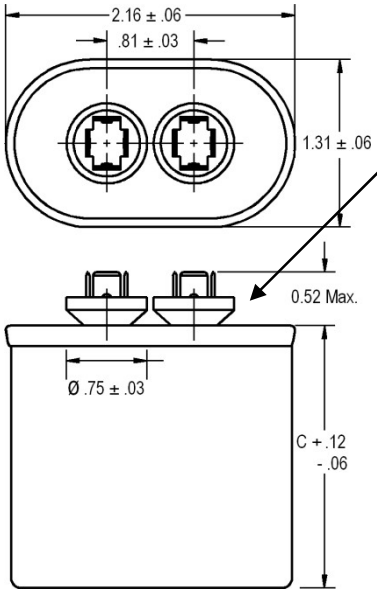

Downloaded from Arrow.com.

Gen Purpose AC Capacitors – GEM III
Application Notes-97F8000 Series-240 & 370 VAC

capcom

ESR Values for 97F8000 Series – Curve Numbers refer to Graphs on Page 10.

Voltage (VAC)	Catalog Number	Capacitance (µF)	ESR (ohms)	Curve Number
240	97F8036	15.0	0.0257	2
	97F8037	25.0	0.0180	2
	97F8038	30.0	0.0228	3
	97F8039	35.0	0.0206	3
	97F8040	40.0	0.0190	3
	97F8041	45.0	0.0241	4
	97F8042	50.0	0.0226	4
	97F8043	55.0	0.0213	4
	97F8044	60.0	0.0215	5
	97F8045	65.0	0.0206	5
	97F8046	70.0	0.0198	5
	97F8047	75.0	0.0191	5
	97F8048	80.0	0.0164	5
	97F8049	85.0	0.0160	5
	97F8050	90.0	0.0156	5
	97F8051	95.0	0.0193	6
	97F8052	100.0	0.0189	6
	97F8053	120.0	0.0176	6

Voltage (VAC)	Catalog Number	Capacitance (µF)	ESR (ohms)	Curve Number
370	97F8054	3.0	0.0700	1
	97F8055	4.0	0.0539	1
	97F8056	5.0	0.0586	2
	97F8057	6.0	0.0499	2
	97F8058	7.5	0.0411	2
	97F8059	10.0	0.0471	3
	97F8060	12.5	0.0392	3
	97F8061	15.0	0.0244	2
	97F8062	17.5	0.0218	2
	97F8063	20.0	0.0281	3
	97F8064	25.0	0.0240	3
	97F8065	30.0	0.0213	3
	97F8066	35.0	0.0262	4
	97F8067	40.0	0.0240	4
	97F8068	45.0	0.0235	5
	97F8069	50.0	0.0222	5
	97F8070	55.0	0.0210	5
	97F8071	60.0	0.0175	5
	97F8072	65.0	0.0169	5
	97F8073	70.0	0.0207	6

The 97F8000 Series of capacitors may be used in AC applications where the voltage waveform is non-sinusoidal. This Application Note is provided to assist in the correct use of the capacitors where higher frequency harmonic currents are present. If you need further assistance please contact Capcom Capacitors Operation through your normal sales channel.

Higher frequency currents are commonly encountered in the filter circuits of Static Power Converters. These frequencies range from 180 to 1500 Hz for a 60 Hz system in various combinations of the odd harmonics depending on the type of converter. Generally, there are not significant harmonic currents above the 25th harmonic.

These capacitors can carry a total current of up to 15 amperes RMS (fundamental plus harmonics). The Equivalent Series Resistance (ERS) for each Catalog Number is shown in the ESR tables on this page. This value may be used to calculate the expected watts loss for a particular application. The user must determine the total RMS current (fundamental plus harmonics) for the application. The watts loss is then calculated using the equation:

W=I2 x ESR **I** = Total RMS current **ESR** = Value from ESR Tables

The calculated watts from this equation must not exceed the allowable watts loss shown on the curve corresponding to the particular capacitor. Two sets of curves are shown, one for natural

NOTES:

(1) In no case should the **total RMS current** of **15 amperes** be exceeded for any of these capacitors

(2) Running the capacitors at case temperatures above 70°C will have a significant effect on expected life. (See chart G-1 on page 11).

(3) Running the capacitors at voltages above the nominal rated voltage will also results in significantly reduced life. (See chart G-2 on page 11).

Downloaded from Arrow.com.

ALLOWABLE WATTS LOSS – Natural Circulation

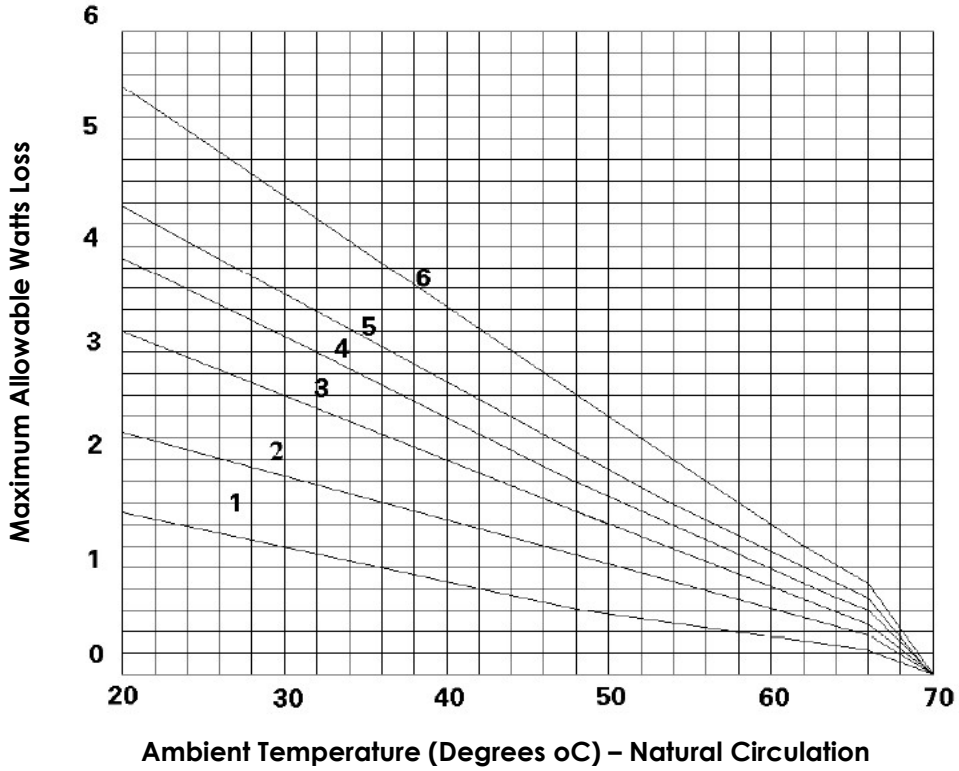

ALLOWABLE WATTS LOSS – Forced Circulation

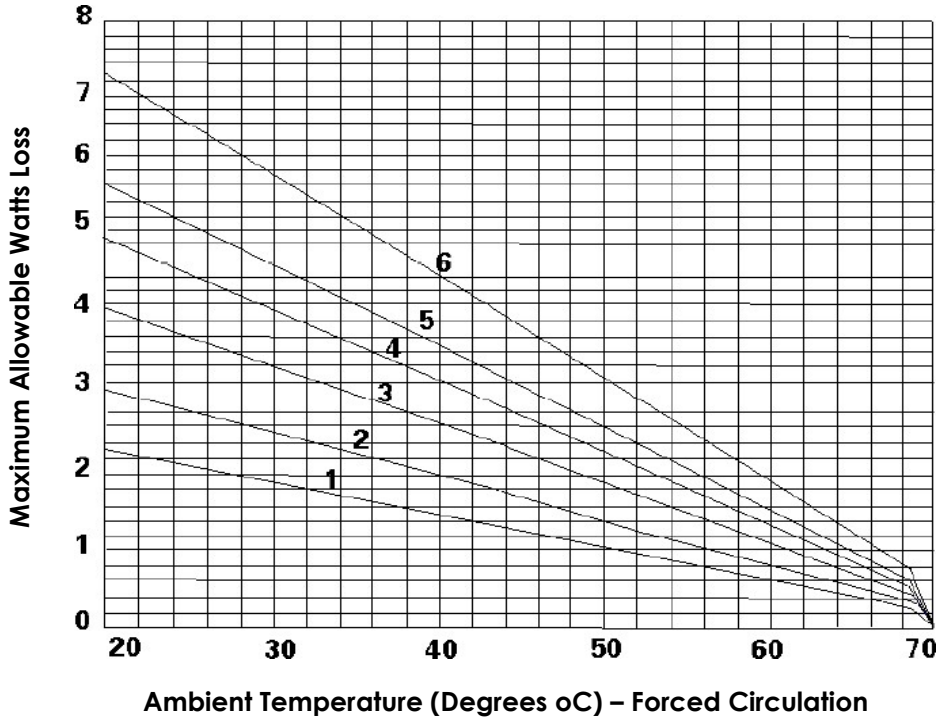

Downloaded from Arrow.com.

LIFE vs TEMPERATURE
CHART G-1

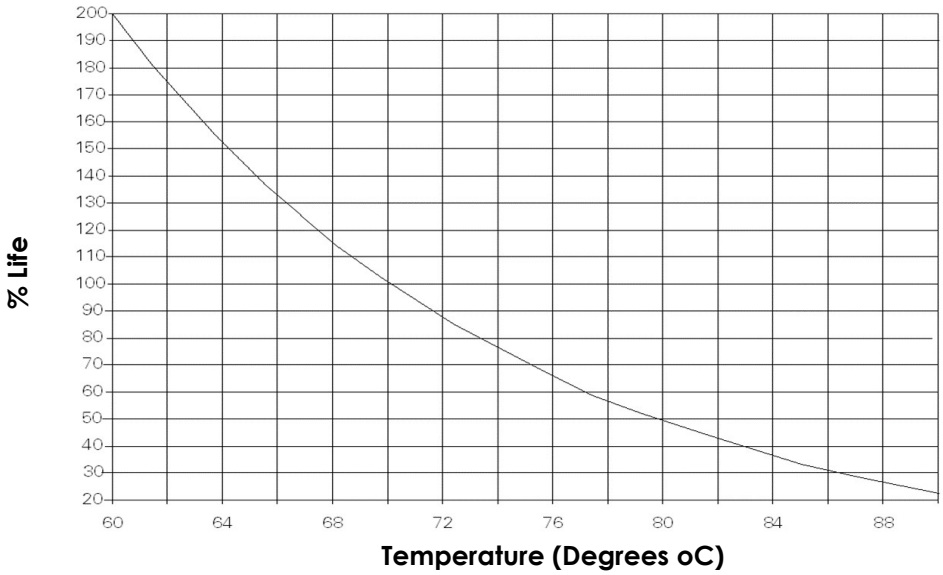

LIFE vs VOLTAGE
CHART G-2

This chart is intended as general reference only. Any indication of extended life by reducing voltage is in no way a guarantee of extended product life.

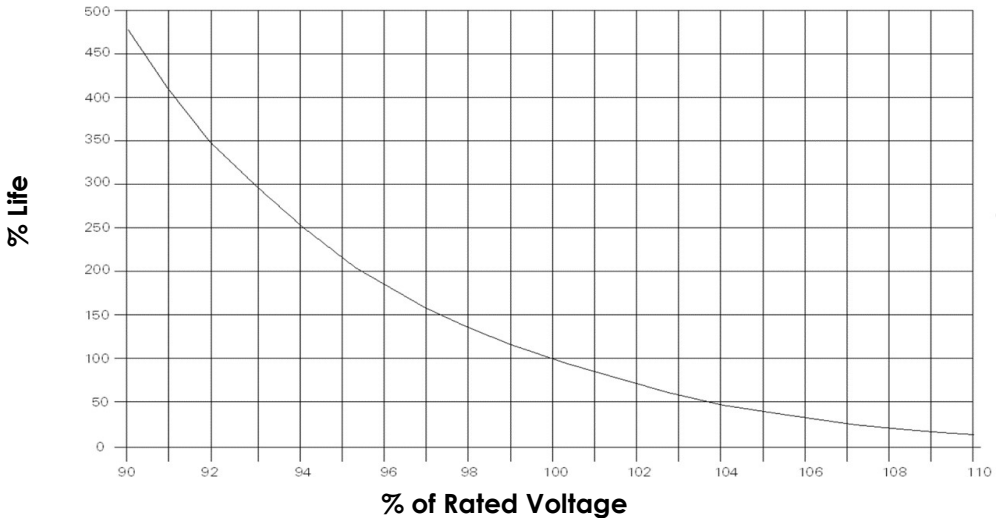

% CAPACITANCE vs. TEMPERATURE
CHART E-3

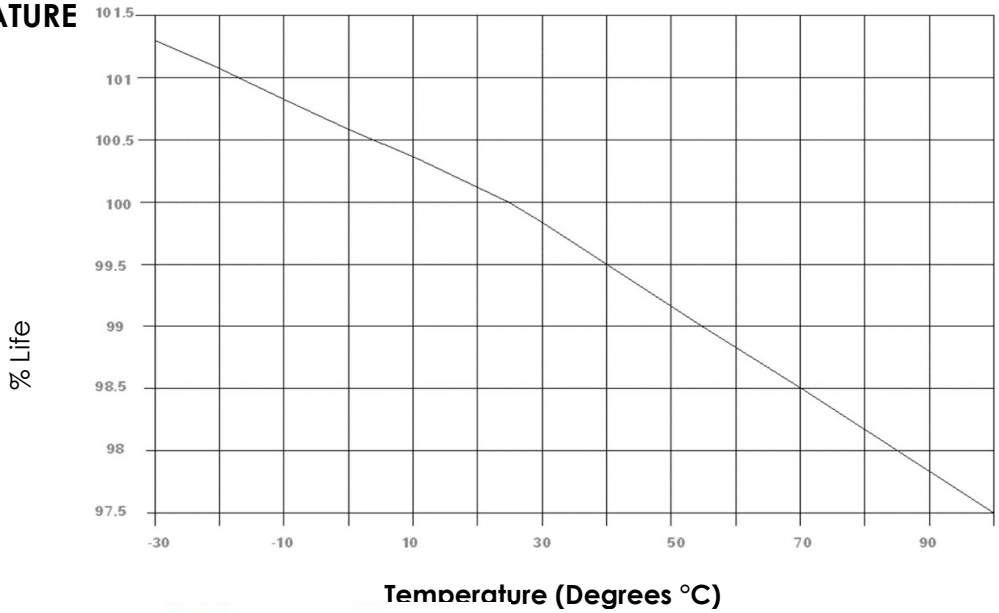

Downloaded from Arrow.com.

General Purpose AC Capacitors – GEM I 600 VAC

capcom

This series of GEM III is des**igned specifically for general purpose AC applications in power supplies, UPS, and power conversion equipment.** Application Data is provided starting on page 14 that gives the Equivalent Series Resistance (ESR) for each unit. This allows the user to calculate the losses for each design / application and to ensure that they are kept within the permissible limits. Any questions regarding the suitability of a capacitor for a particular application may be referred to Capcom Engineers by contacting your Capcom sales representative.

SPECIFICATIONS:

Available Capacitance Range:	1.5 to 45µF (special ratings upon request)
Capacitance Tolerance	±6%
Capacitance Variation with Temperature:	See Chart E-3 on page 16
Rated Voltage:	See Rating Tables. Rating is the 50/60Hz RMS voltage for a sinusoidal waveform. For other wave forms refer to the Application Note on page 14. (Special Ratings upon request)
Leakage Current:	30µA maximum
Frequency	50/60 Hz. For higher frequencies refer to the Application Note on page 15
Operating Temperature:	-40°C to +70°C
Storage Temperature:	-40°C to +90°C
Operating Life:	60,000 hours with 94% survival (In accordance with the EIA-456 Industry Standard)
Dissipation Factor:	0.1% maximum
Case Material/Finish:	Unpainted Aluminum case, terne plate steel cover. Contact Capcom if material/finish to meet UL outdoor standards is required
Terminations:	Combo' terminal: 0.250" x 0.031" quick connect blade
Dielectric Fluid:	Proprietary dielectric oil
Internal Protection:	UL recognized Pressure Sensitive Interrupter.

Case Style	Capcom Code	Generic UL Code
A	P921	A10000AFC
B	P962	B10000AFC
C	P923	C10000AFC
D	P924	D10000AFC

See Ratings Table for Capcom´s UL Code Number listed under Capcom's UL File E322597.
For UL submittals with these capacitors, use the RBC 'Pxxx' number not the Catalog Number. The corresponding generic UL designation that includes the Available Faults Current (AFC) rating is given below. All these capacitors are capable of interrupting available fault currents of up to 10,000 amperes.

Downloaded from Arrow.com.

Gen Purpose AC Capacitors - GEM III
Single Ratings - 1 Section

capcom

Voltage (VAC)	Capacitance (µF)	Catalog Number	Case Style	Base Size (in.)	Can Type	Height C (in.)	UL Code
600	1.5	97F8240	A	1.25	Oval	2.12	P961
	2.0	97F8241	A	1.25	Oval	2.12	P961
	2.5	97F8242	A	1.25	Oval	2.88	P961
	3.0	97F8243	A	1.25	Oval	2.88	P961
	4.0	97F8244	A	1.25	Oval	2.88	P961
	5.0	97F8245	A	1.25	Oval	3.88	P961
	6.0	97F8246	A	1.25	Oval	3.88	P961
	7.0	97F8247	A	1.25	Oval	4.75	P961
	8.0	97F8248	A	1.25	Oval	4.75	P961
	10.0	97F8249	B	1.50	Oval	3.88	P962
	12.0	97F8250	B	1.50	Oval	3.88	P962
	15.0	97F8251	B	1.50	Oval	3.88	P962
	18.0	97F8252	B	1.50	Oval	4.75	P962
	20.0	97F8253	B	1.50	Oval	4.75	P962
	25.0	97F8254	C	1.75	Oval	4.75	P963
	30.0	97F8255	D	2.00	Oval	3.88	P964
	35.0	97F8256	D	2.00	Oval	4.75	P964
	40.0	97F8257	D	2.00	Oval	4.75	P964
	45.0	97F8258	D	2.00	Oval	4.75	P964

Case Style A,B,C,D

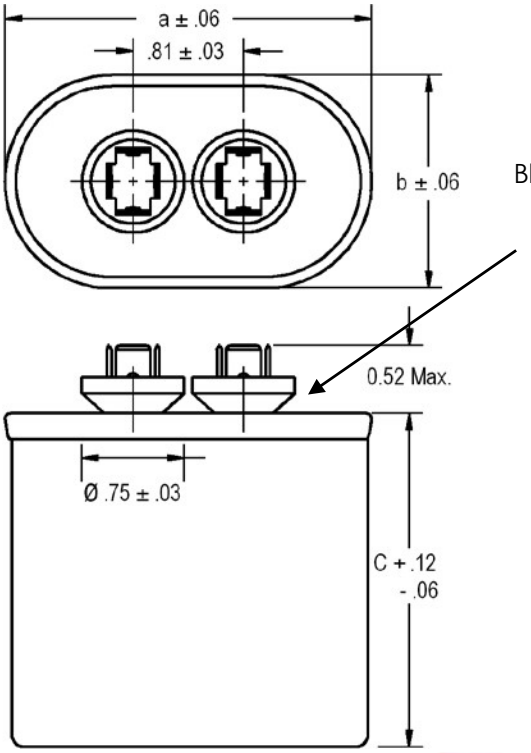

(4) .250 x .031
Blades per terminal

Case	a	b
A	2.16	1.31
B	2.69	1.56
C	2.91	1.91
D	3.66	1.97

Downloaded from Arrow.com.

ESR Values for 97F8200 Series – Curve Numbers refer to Graphs on Page 15.

Voltage (VAC)	Catalog Number	Capacitance (µF)	ESR (ohms)	Curve Number
600	97F8240	1.5	0.1277	1
	97F8241	2.0	0.0971	1
	97F8242	2.5	0.0984	2
	97F8243	3.0	0.0831	2
	97F8244	4.0	0.0639	2
	97F8245	5.0	0.0723	3
	97F8246	6.0	0.0615	3
	97F8247	7.0	0.0739	4
	97F8248	8.0	0.0657	4
	97F8249	10.0	0.0404	4
	97F8250	12.0	0.0366	4
	97F8251	15.0	0.0309	4
	97F8252	18.0	0.0361	5
	97F8253	20.0	0.0334	5
	97F8254	25.0	0.0294	5
	97F8255	30.0	0.0220	5
	97F8256	35.0	0.0258	6
	97F8257	40.0	0.0240	6
	97F8258	45.0	0.0225	6

The 97F8200 Series of capacitors may be used in AC applications where the voltage waveform is non- sinusoidal. This Application Note is provided to assist in the correct use of the capacitors where higher frequency harmonic currents are present. If you need further assistance please contact Capcom's Capacitors Operation through your normal sales channel.

Higher frequency currents are commonly encountered in the filter circuits of Static Power Converters. These frequencies range from 180 to 1500 Hz for a 60 Hz system in various combinations of the odd harmonics depending on the type of converter. Generally, there are not significant harmonic currents above the 25th harmonic.

These capacitors can carry a total current of up to 15 amperes RMS (fundamental plus harmonics). The Equivalent Series Resistance (ERS) for each Catalog Number is shown in the ESR tables on this page. This value may be used to calculate the expected watts loss for a particular application. The user must determine the total RMS current (fundamental plus harmonics) for the application. The watts loss is then calculated using the equation:

$$W=I^2 \times ESR$$ **I =** Total RMS current **ESR =** Value from ESR Tables

The calculated watts from this equation must not exceed the allowable watts loss shown on the curve corresponding to the particular capacitor. Two sets of curves are shown, one for natural

NOTES

(1) In no case should the **total RMS current** of **15 amperes** be exceeded for any of these capacitors

(2) Running the capacitors at case temperatures above 70ºC will have a significant effect on expected life. (See chart G-1 on page 16).

(3) Running the capacitors at voltages above the nominal rated voltage will also results in significantly reduced life. (See chart G-2 on page 16).

Downloaded from Arrow.com.

ALLOWABLE WATTS LOSS – Natural Circulation

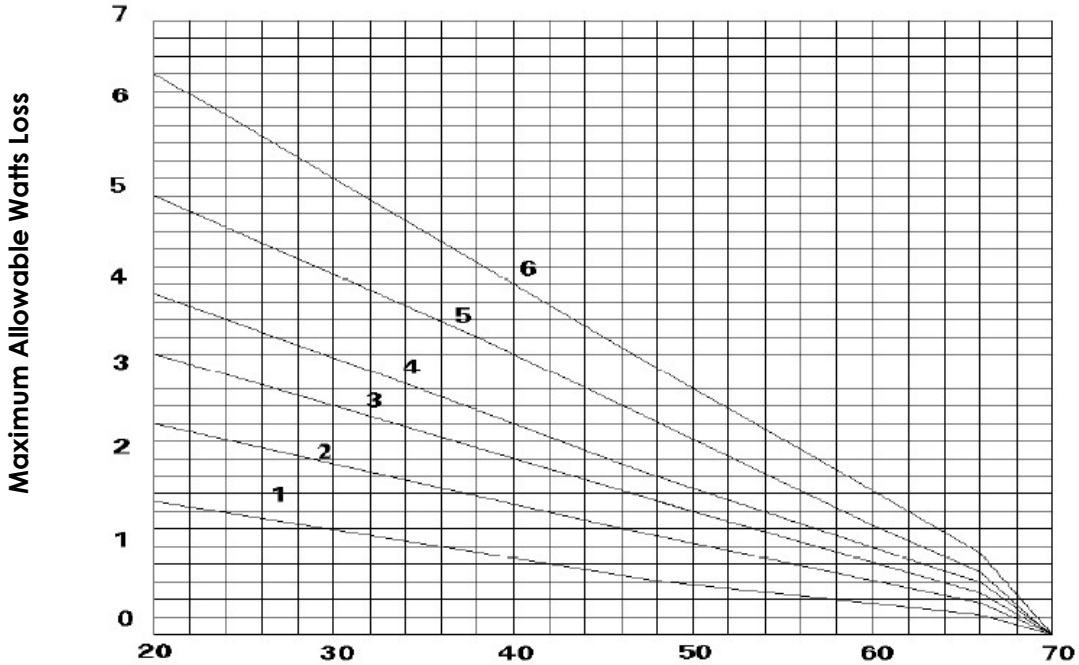

Ambient Temperature (Degrees oC) – Natural Circulation

ALLOWABLE WATTS LOSS – Forced Circulation

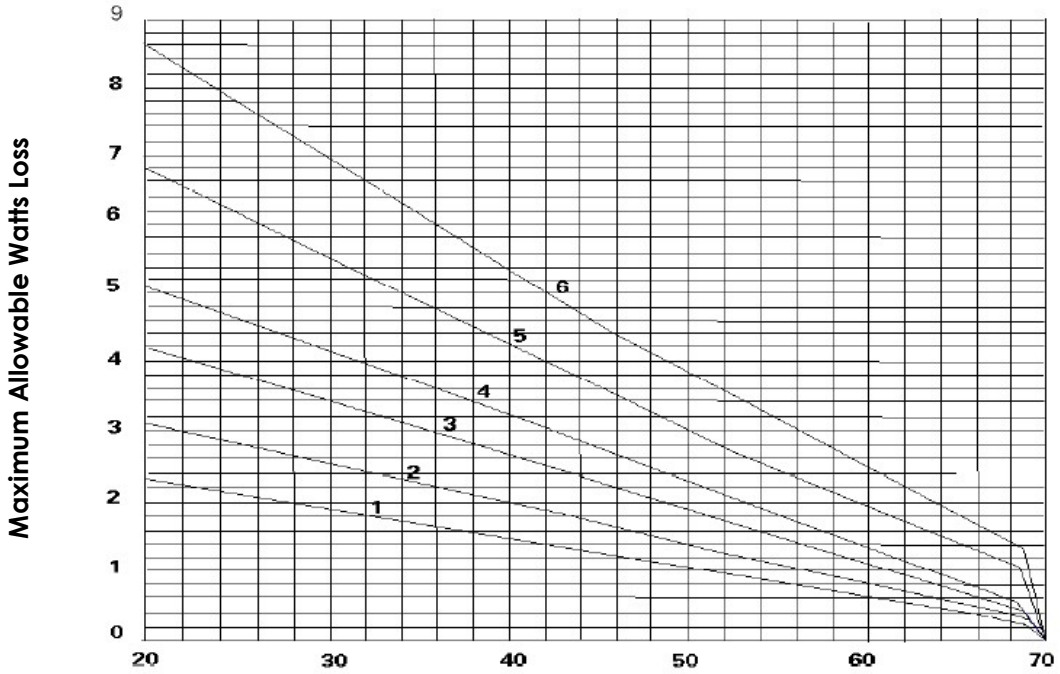

Ambient Temperature (Degrees oC) – Forced Circulation

Downloaded from Arrow.com.

LIFE vs TEMPERATURE
CHART G-1

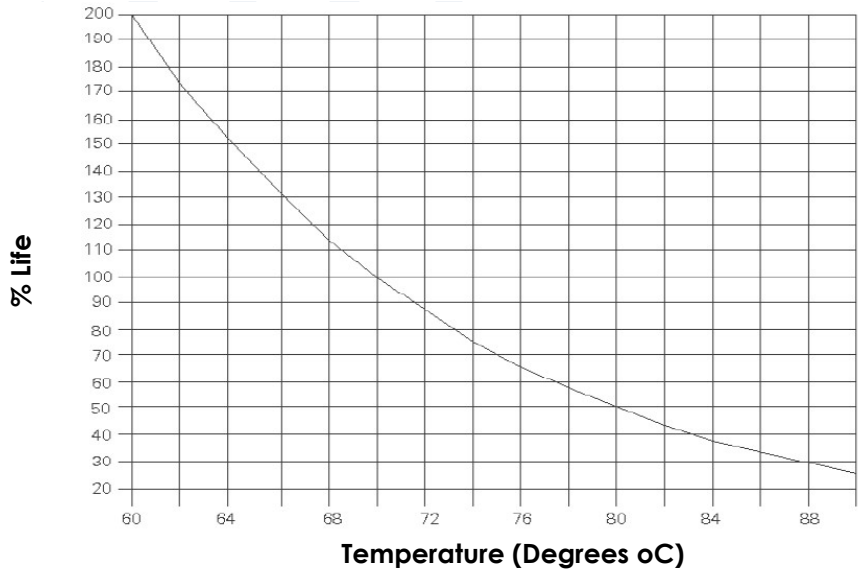

LIFE vs VOLTAGE
CHART G-2

This chart is intended as general reference only. Any indication of extended life by reducing voltage is in no way a guarantee of extended product life.

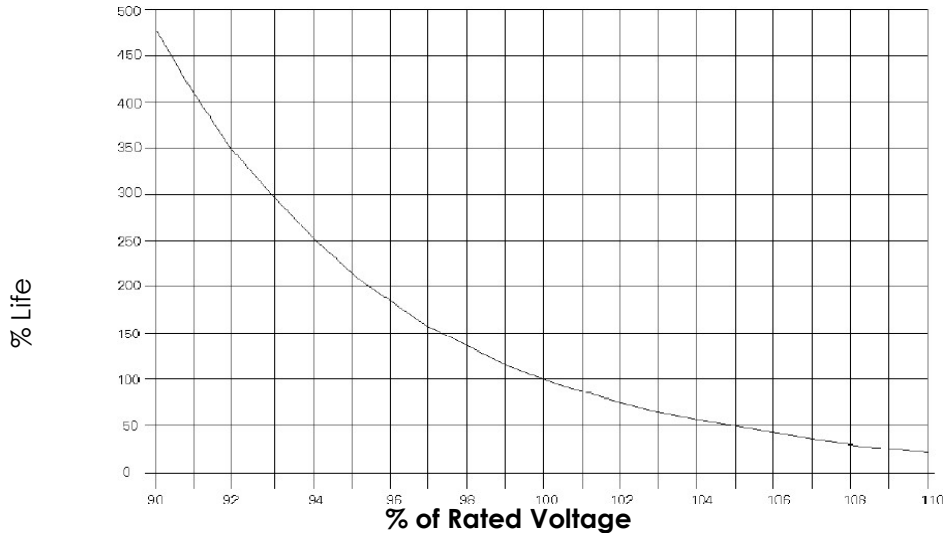

% CAPACITANCE vs. TEMPERATURE
CHART E-3

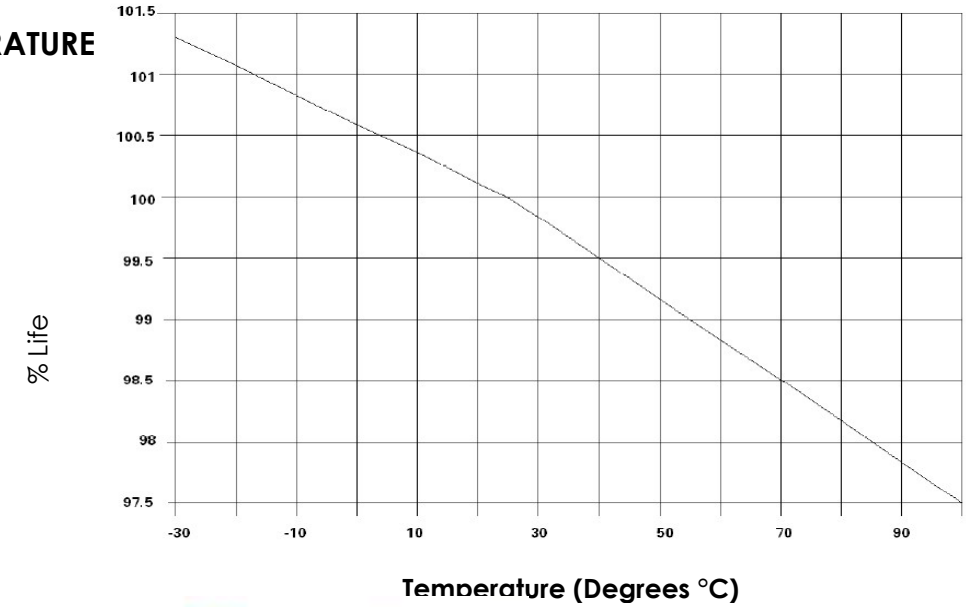

Downloaded from Arrow.com.

General Purpose AC Capacitors – GEM II 600 VAC (Series Section)

capcom

This series of GEM III is designed specifically for **general purpose applications in power supplies, UPS, and power conversation equipment.** Application Data is provided starting on page 19 that gives the Equivalent Series Resistance (ESR) for these units. This allows the user to calculate the losses for each design / application and to ensure that they are kept within the permissible limits. Any questions regarding the suitability of a capacitor for a particular application may be referred to Capcom Engineers by contacting your Capcom sales representative.

SPECIFICATIONS:

Available Capacitance Range:	1.5 to 45µF (Special ratings upon request)
Capacitance Tolerance	±6%
Capacitance Variation with Temperature:	See Chart E-3 on page 21
Rated Voltage:	See Rating Tables. Rating is the 50/60Hz RMS voltage for a sinusoidal waveform. For other wave forms refer to the Application Note on page 21
Leakage Current:	30µA maximum
Frequency	50/60 Hz. For higher frequencies refer to the Application Note on page 17
Operating Temperature:	-40°C to +70°C
Storage Temperature:	-40°C to +90°C
Operating Life:	60,000 hours with 94% survival (In accordance with the EIA-456 Industry Standard)
Dissipation Factor:	0.1% maximum
Case Material/Finish:	Unpainted Aluminum case, terne plate steel cover.
Terminations:	Combo' terminal: 0.250" x 0.031" quick connect blades
Dielectric Fluid:	Proprietary dielectric oil
Internal Protection:	UL recognized Pressure Sensitive Interrupter.

Case Style	Capcom Code	Generic UL Code
A	P921	A10000AFC
B	P962	B10000AFC
C	P923	C10000AFC

See Ratings Table for Capcom´s UL Code Number listed under Capcom's UL File E322597. For UL submittals
with these capacitors, use the RBC 'Pxxx' number not the Catalog Number. The corresponding generic UL designation that includes the Available Faults Current (AFC) rating is given below. All these capacitors are capable of interrupting available fault currents of up to 10,000 amperes.

Downloaded from Arrow.com.

Gen Purpose AC Capacitors – GEM III
Single Ratings – 1 Section

Voltage (VAC)	Capacitance (µF)	Catalog Number	Case Style	Base Size (in.)	Can Type	Height C (in.)	UL Code
660	2.0	27L6095	A	1.25	Oval	3.88	P851
	2.5	27L6093	A	1.25	Oval	3.88	P851
	3.0	27L6094	A	1.25	Oval	3.88	P851
	4.0	27L6012	A	1.25	Oval	3.88	P851
	5.0	27L6013	A	1.25	Oval	3.88	P851
	6.0	27L6014	A	1.25	Oval	4.75	P851
	7.0	27L6015	A	1.25	Oval	4.75	P851
	8.0	27L6016	A	1.25	Oval	4.75	P851
	10.0	27L6017	B	1.50	Oval	3.88	P852
	12.0	27L6018	B	1.50	Oval	4.75	P852
	15.0	27L6073	C	1.75	Oval	4.75	P853
	18.0	27L6089	D	2.00	Oval	3.88	P854
	20.0	27L6082	D	2.00	Oval	4.75	P854
	25.0	27L6022	D	2.00	Oval	4.75	P854
	30.0	27L6023	D	2.00	Oval	4.75	P854

Case Style A, B, C,

(4) .250 x .031
Blades per terminal

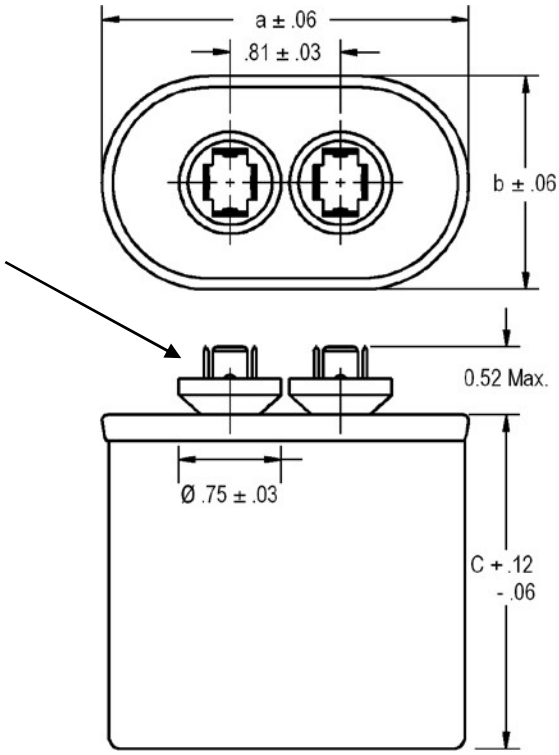

Case Style	a	b
A	2.16	1.31
B	2.69	1.56
C	2.91	1.91
D	3.66	1.97

Downloaded from Arrow.com.

ESR Values for 27L Series – Curve Numbers refer to Graphs on Page 20

Voltage (VAC)	Catalog Number	Capacitance (µF)	ESR (ohms)	Curve Number
660	27L6095	2.0	0.0971	1
	27L6093	2.5	0.0984	2
	27L6094	3.0	0.0831	2
	27L6012	4.0	0.0639	2
	27L6013	5.0	0.0723	2
	27L6014	6.0	0.0615	3
	27L6015	7.0	0.0739	3
	27L6016	8.0	0.0657	4
	27L6017	10.0	0.0404	4
	27L6018	12.0	0.0366	4
	27L6073	15.0	0.0309	4
	27L6089	18.0	0.0361	4
	27L6082	20.0	0.0334	5
	27L6022	25.0	0.0294	5
	27L6023	30.0	0.0220	5

The 27L Series of capacitors may be used in AC applications where the voltage waveform is non-sinusoidal. This Application Note is provided to assist in the correct use of the capacitors where higher frequency harmonic currents are present. If you need further assistance please contact Capcom´s Capacitors Operation through your normal sales channel.

Higher frequency currents are commonly encountered in the filter circuits of Static Power Converters. These frequencies range from 180 to 1500 Hz for a 60 Hz system in various combinations of the odd harmonics depending on the type of converter. Generally, there are not significant harmonic currents above the 25th harmonic.

These capacitors can carry a total current of up to 15 amperes RMS (fundamental plus harmonics). The Equivalent Series Resistance (ERS) for each Catalog Number is shown in the ESR tables on this page. This value may be used to calculate the expected watts loss for a particular application. The user must determine the total RMS current (fundamental plus harmonics) for the application. The watts loss is then calculated using the equation:

$W=I^2 \times ESR$ **I =** Total RMS current **ESR =** Value from ESR Tables

The calculated watts from this equation must not exceed the allowable watts loss shown on the curve corresponding to the particular capacitor. Two sets of curves are shown, one for natural

NOTES:

(1) In no case should the **total RMS current** of **15 amperes** be exceeded for any of these capacitors

(2) Running the capacitors at case temperatures above 70ºC will have a significant effect on expected life. (See chart G-1 on page 21).

(3) Running the capacitors at voltages above the nominal rated voltage will also results in significantly reduced life. (See chart G-2 on page 21).

Downloaded from Arrow.com.

ALLOWABLE WATTS LOSS – Natural Circulation

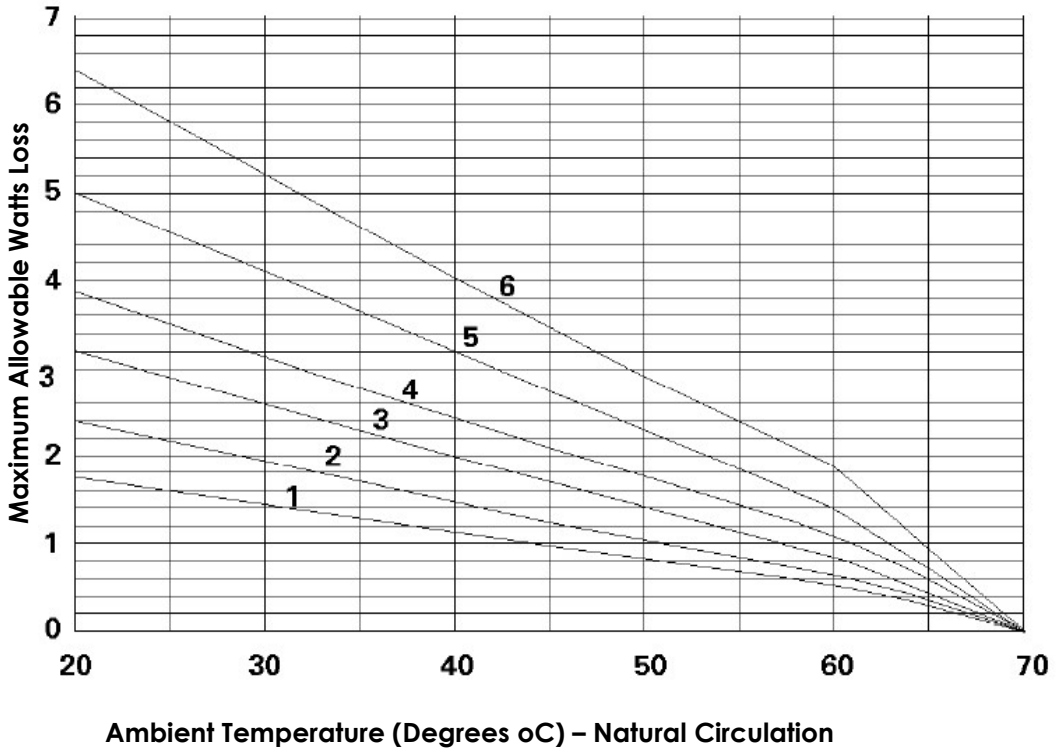

ALLOWABLE WATTS LOSS – Forced Circulation

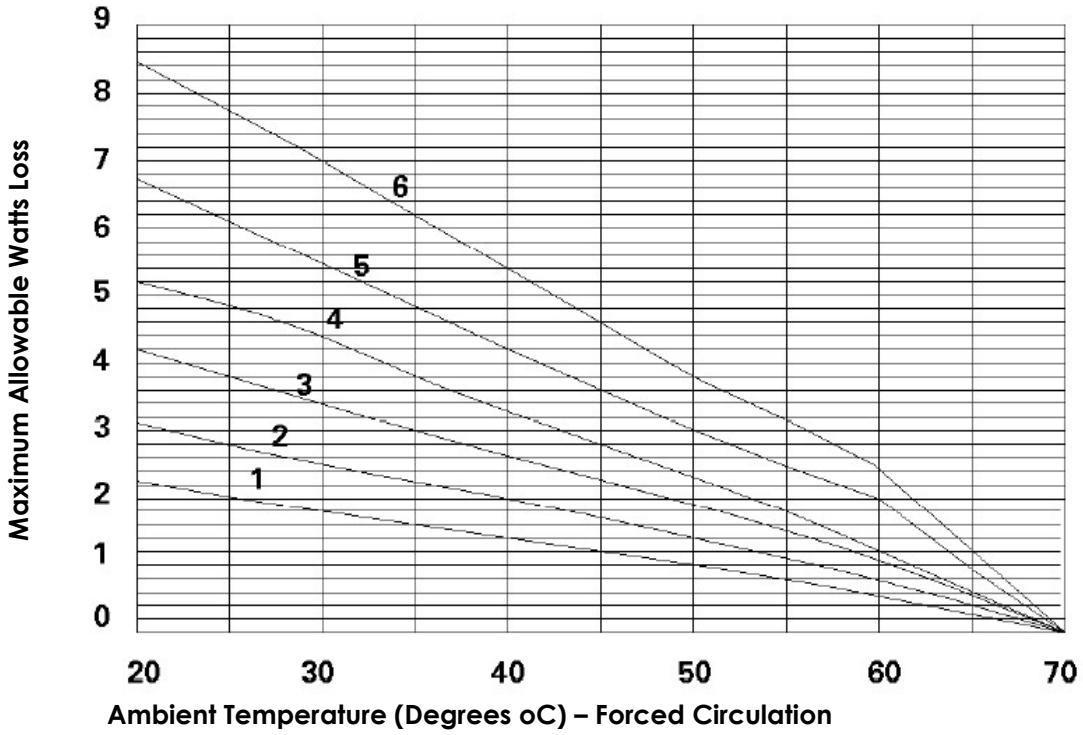

Downloaded from Arrow.com.

capcom

LIFE vs TEMPERATURE
CHART G-1

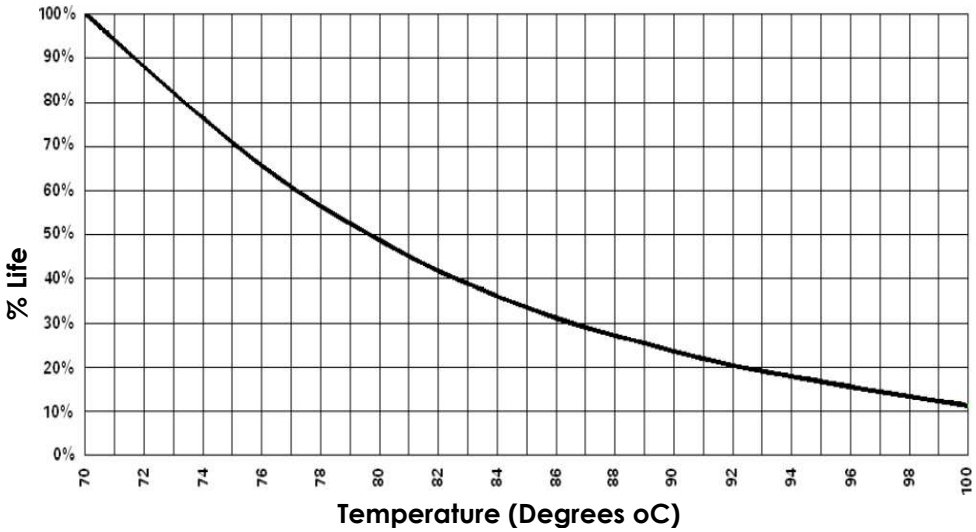

LIFE vs VOLTAGE
CHART G-2

This chart is intended as general reference only. Any indication of extended life by reducing voltage is in no way a guarantee of extended product life.

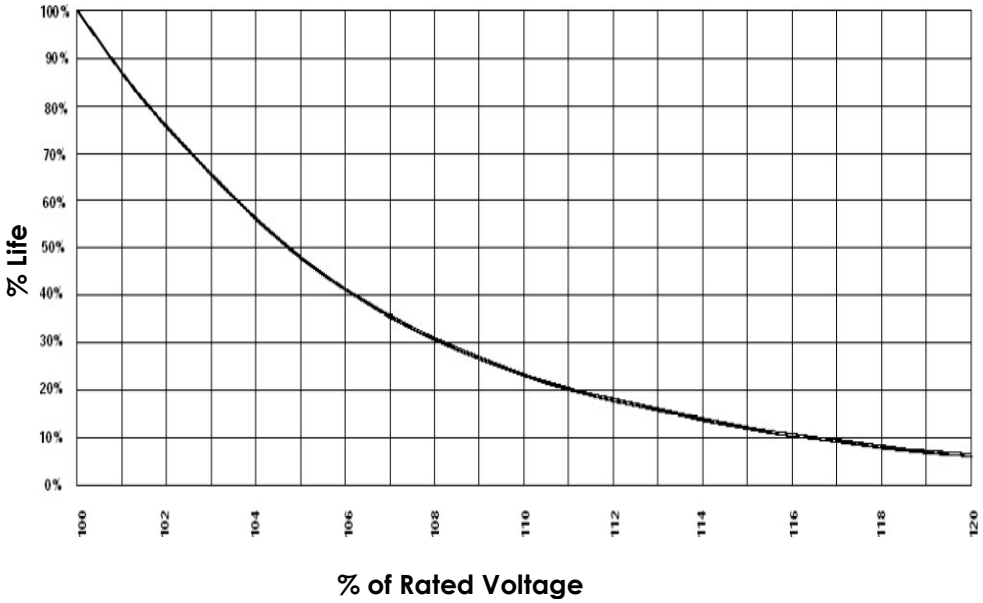

% CAPACITANCE vs. TEMPERATURE
CHART E-3

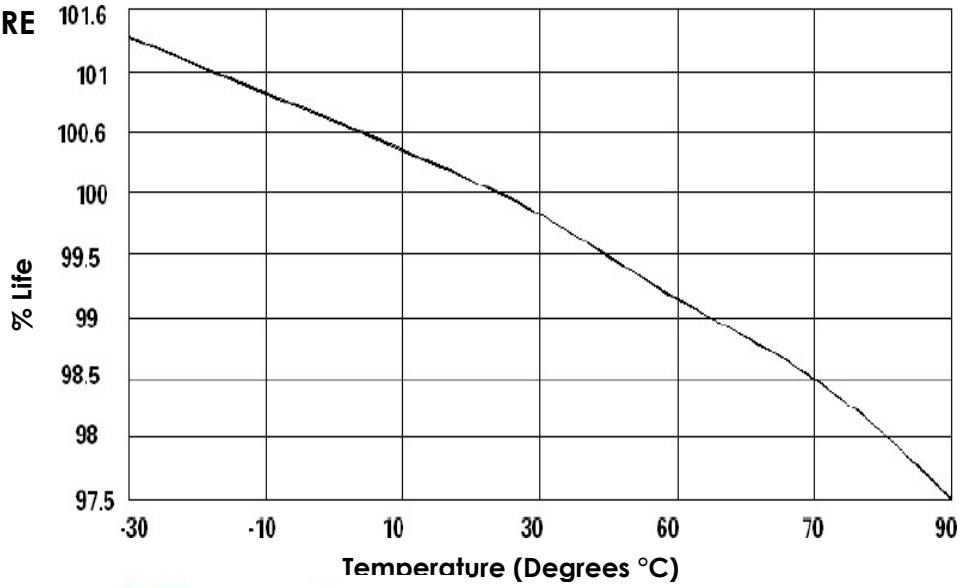

Downloaded from Arrow.com.

General Purpose AC Capacitors – GEM III 1000 VDC Peak

capcom

This series of GEM III – dual rated AC/DC Capacitors is **designed specifically for applications such as AC/DC filters where harmonic frequencies greater than 60Hz are common**. These capacitors are typically used in DC filters at voltages above those served by electrolytic type construction. Any questions regarding the suitability of a capacitor for a particular application may be referred to Capcom Engineers through contacting your Capcom sales representative

SPECIFICATIONS:

Available Capacitance Range: 3 to 50µF (Special ratings upon request)

Capacitance Tolerance ±6%

Capacitance Variation with Temperature: ±5% from -40°C to +70°C

Rated Voltage: See Rating Tables. Rating is the Max Peak DC Voltage. Special ratings upon request)

Ripple Voltage: The RMS ripple voltage should not exceed the following percentages of the rated voltage for these frequencies:

Frequency	% Rated Voltage
60 HZ	44
120 HZ	30
400 HZ	12
1000 HZ	8
10000 HZ	0.6

Operating Temperature: -30°C to +70°C

Storage Temperature: -55°C to +70°C

Operating Life: 60,000 hours with 90% survival with proper derating.

Dissipation Factor: 0.3% maximum

Case Material/Finish: Unpainted Aluminum case, terne plate steel cover.

Terminations: Combo' terminal: 0.250" x 0.031" quick connect blade

Dielectric Fluid: Proprietary dielectric oil

Internal Protection: UL recognized Pressure Sensitive Interrupter.

Case Style	Capcom Code	Generic UL Code
A	P921	A10000AFC
P	P965	P10000AFC
S	P968	S10000AFC
T	P969	T10000AFC

See Ratings Table for Capcom´s UL Code Number listed under Capcom's UL File E322597. For UL submittals with these capacitors, use the RBC 'Pxxx' number not the Catalog Number. The corresponding generic UL designation that includes the Available Faults Current (AFC) rating is given below. All these capacitors are capable of interrupting available fault currents of up to 10,000 amperes.

Downloaded from Arrow.com.

S

Downloaded from Arrow.com.

Gen Purpose AC/DC Capacitors – GEM III
Single Ratings – 1 Section

capcom

Voltage Rating	Capacitance (µF)	Catalog Number	Case Style	Base Size (in.)	Can Type	Height C (in.)
1000 VDC Peak (440 VAC)	3.0	97F5437	A	1.25	Oval	2.12
	4.0	97F5337	A	1.25	Oval	2.88
	5.0	97F5339	A	1.25	Oval	2.88
	6.0	97F5436	A	1.25	Oval	2.88
	7.5	97F9036	A	1.25	Oval	3.88
	10.0	97F5300	A	1.25	Oval	3.88
	12.5	97F5001	P	1.75	Round	2.88
	15.0	97F9037	P	1.75	Round	2.88
	17.5	97F9038	P	1.75	Round	3.88
	20.0	97F9039	P	1.75	Round	3.88
	25.0	97F9040	P	1.75	Round	4.75
	30.0	97F5023	P	1.75	Round	4.75
	35.0	97F9041	S	2.00	Round	4.75
	40.0	97F5116	S	2.00	Round	4.75
	45.0	97F5209	T	2.50	Round	3.88
	50.0	97F5211	T	2.50	Round	3.88

Case Style P, S, and T

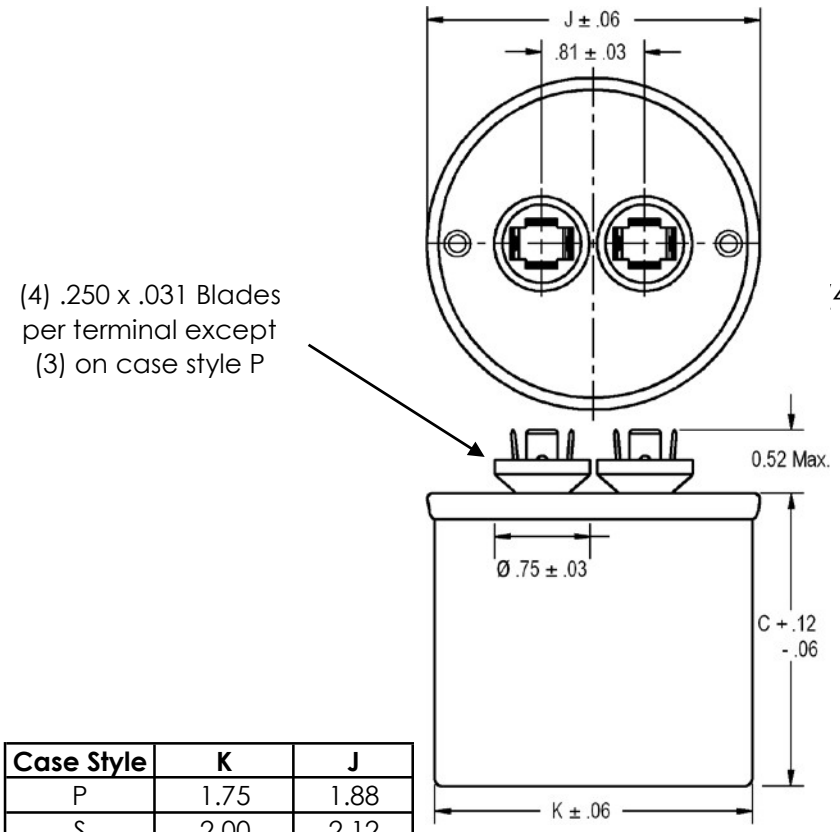

Case Style	K	J
P	1.75	1.88
S	2.00	2.12
T	2.50	2.62

Case Style A

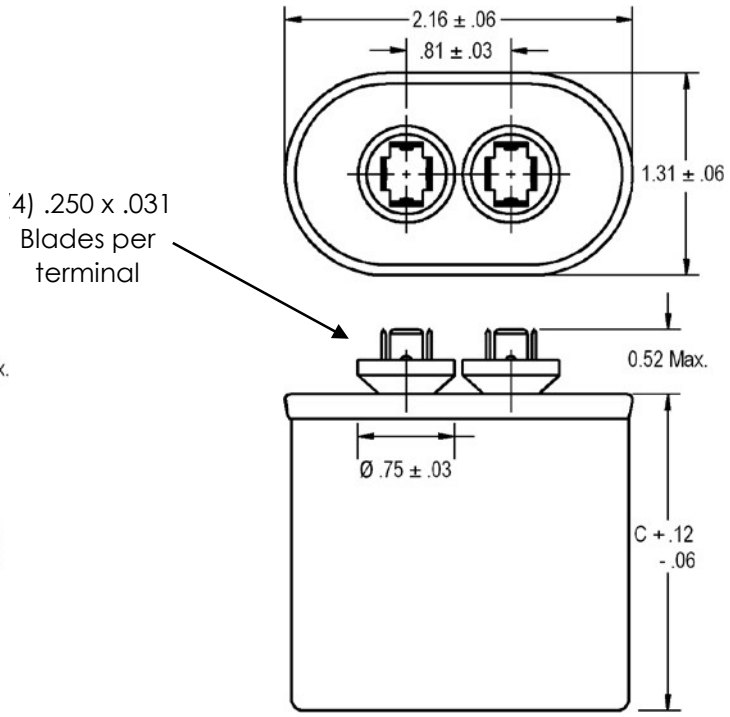

Downloaded from Arrow.com.

Cross Reference
600 VAC 26F6600 Series to NEW 660 VAC 27L Series

Series Name	Capacitance (µF)	Catalog Number	Case Style	Height Ht (in.)
Film / Paper (26F Series)	2.0	26F6618	A	2.12
	2.5	26F6619	A	2.12
	3.0	26F6620	A	2.38
	4.0	26F6621	A	3.12
	5.0	26F6622	A	3.50
	6.0	26F6623	A	4.25
	7.0	26F6624	A	4.50
	8.0	26F6625	A	5.50
	10.0	26F6626	C	3.88
	12.0	26F6627	C	4.50
	15.0	26F6628	C	5.50
	18.0	26F6629	C	6.75
	20.0	26F6634	D	6.25
	25.0	26F6665	D	7.25
	30.0	26F6636	D	8.00

Series Name	Capacitance (µF)	Catalog Number	Case Style	Height Ht (in.)	UL Code
GEM III (27L Series)	2.0	27L6095	A	3.88	P851
	2.5	27L6093	A	3.88	P851
	3.0	27L6094	A	3.88	P851
	4.0	27L6012	A	3.88	P851
	5.0	27L6013	A	3.88	P851
	6.0	27L6014	A	4.75	P851
	7.0	27L6015	A	4.75	P851
	8.0	27L6016	A	4.75	P851
	10.0	27L6017	B	3.88	P852
	12.0	27L6018	B	4.75	P852
	15.0	27L6073	C	4.75	P853
	18.0	27L6089	D	3.88	P854
	20.0	27L6082	D	4.75	P854
	25.0	27L6022	D	4.75	P854
	30.0	27L6023	D	4.75	P854

Film / Paper
(26F Series) Outline

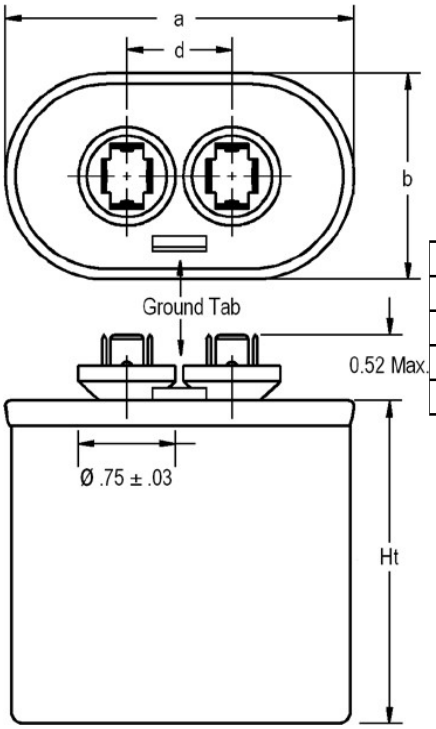

Case Style	a	b	d
A	2.16	1.31	0.81
B	2.69	1.56	0.81
C	2.91	1.91	0.81
D	3.66	1.97	0.81

GEM III
(27L Series) Outline

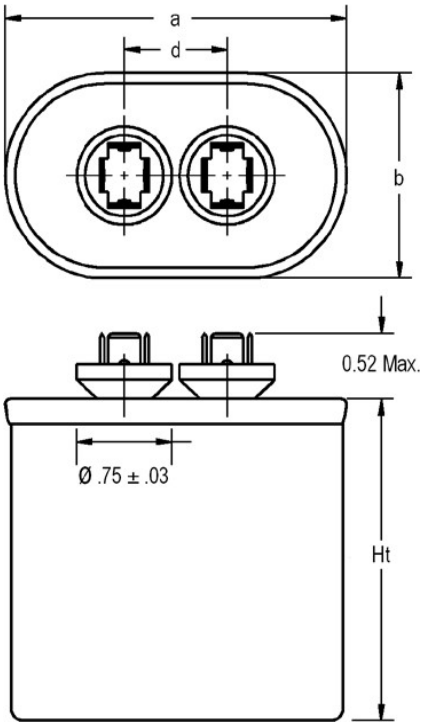

Downloaded from Arrow.com.

Cross Reference
600 VAC 61L Series to NEW 660 VAC 27L Series

capcom

Series Name	Capacitance (µF)	Catalog Number	Case Style	Height Ht (in.)
GEM II (61L Series)	2.0	61L1271	A	2.12
	2.5	61L1280	A	2.88
	3.0	61L1272	A	2.88
	4.0	61L313	A	2.88
	5.0	61L1273	A	3.88
	6.0	61L1274	A	3.88
	7.0	61L316	A	3.88
	8.0	61L1275	A	4.75
	10.0	61L1286	B	3.88
	12.0	61L1276	B	4.75
	15.0	61L1289	B	5.75
	18.0	61L1277	B	5.75
	20.0	61L322	C	4.75
	25.0	61L323	C	5.75
	30.0	61L324	D	5.75

Series Name	Capacitance (µF)	Catalog Number	Case Style	Height Ht (in.)	UL Code
GEM III (27L Series)	2.0	27L6095	A	3.88	P851
	2.5	27L6093	A	3.88	P851
	3.0	27L6094	A	3.88	P851
	4.0	27L6012	A	3.88	P851
	5.0	27L6013	A	3.88	P851
	6.0	27L6014	A	4.75	P851
	7.0	27L6015	A	4.75	P851
	8.0	27L6016	A	4.75	P851
	10.0	27L6017	B	3.88	P852
	12.0	27L6018	B	4.75	P852
	15.0	27L6073	C	4.75	P853
	18.0	27L6089	D	3.88	P854
	20.0	27L6082	D	4.75	P854
	25.0	27L6022	D	4.75	P854
	30.0	27L6023	D	4.75	P854

GEM II
(61L Series) Outline

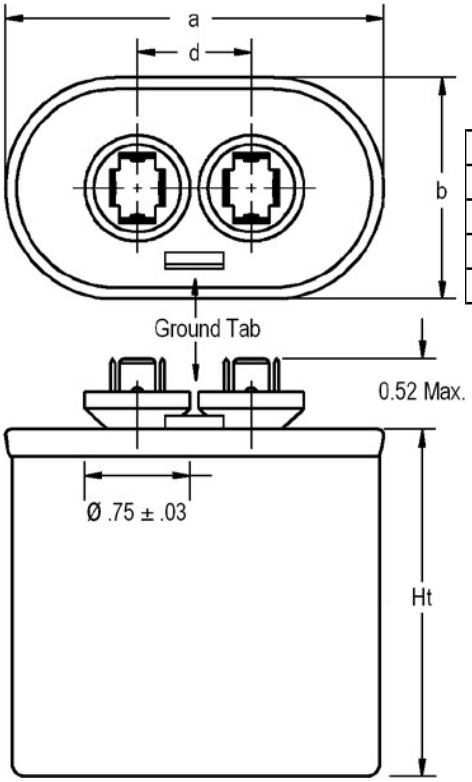

Case	a	b	d
A	2.16	1.31	0.81
B	2.69	1.56	0.81
C	2.91	1.91	0.81
D	3.66	1.97	0.81

GEM III
(27L Series) Outline

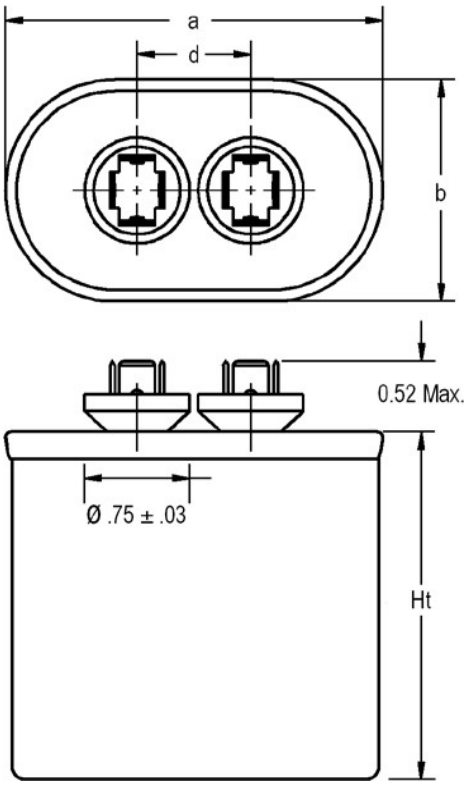

Downloaded from Arrow.com.

Capacitor Label

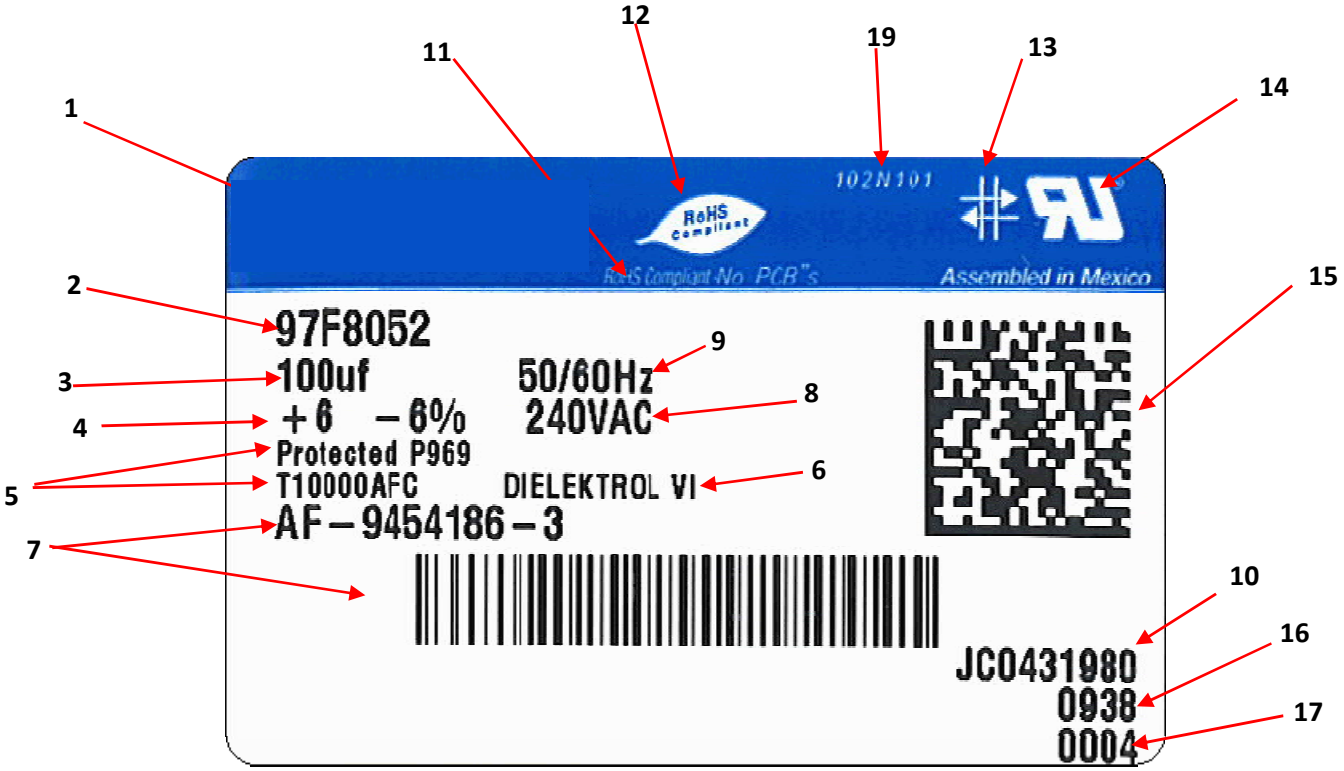

1. Product / Brand
2. Genteq Catalog Model Number
3. Capacitance in Micro-Farads
4. Tolerance
5. UL Designation Including Available Fault Current (AFC) Rating
6. Genteq Product Name of Dielectric Fluid
7. Customer Part Number and Bar Code
8. AC Voltage Rating
9. Frequency
10. Manufacturing WIP Job Number
11. RoHS Compliant / No PCBs Statement
12. RoHs Compliant Logo
13. Self-Healing Symbol
14. UL Approved Logo
15. Data Matrix Bar Code
16. Manufacturing Date Code

Example:

09	38
Year (Last Digits of Year)	Fiscal Week

17. Label Sequence Number
18. Country of Origin
19. Label Part Number (Internal)

Downloaded from Arrow.com.

Ampere 8755,
Parque Industrial Antonio J. Bermúdez,
Cd. Juárez, Chihuahua, CP 32470
MEXICO
Tel: +52 (656) 649 64 00
www.capcom.mx

Downloaded from Arrow.com.