Rev	AWO #	Description	Date	Appr
-		RELEASED	11/27/18	

APPROVED: _____

DATE: _____ TITLE: _____

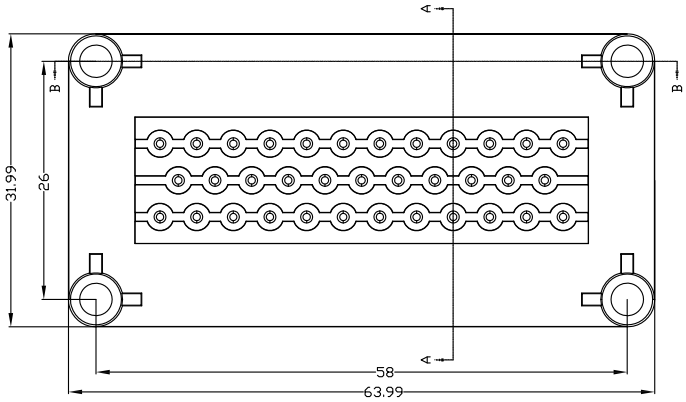

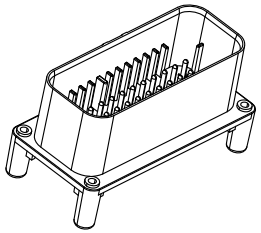

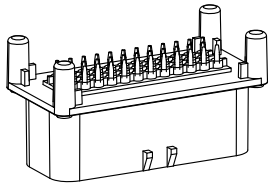

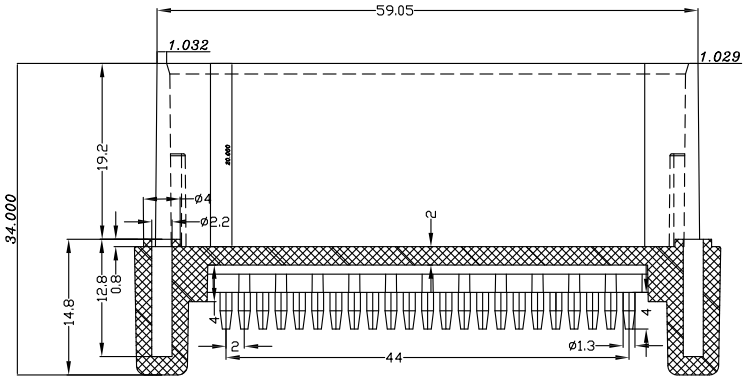

SECTION B-B

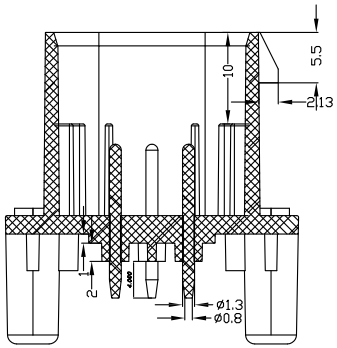

SECTION A-A

UNLESS OTHERWISE SPECIFIED
ALL DIMENSIONS ARE MILLIMETERS
TOLERANCES: EXCEPT AS NOTED

MM		ANGLE
0.5~6	± 0.05	± 1°
6~30	± 0.10	
30~120	± 0.15	

APPROVALS		DATE
DRAWN	AY	11/27/18
CHECKED	AC	11/27/18
APPROVED		

ADAM TECH INTERCONNECTS
909 Rahway Avenue,
Union, NJ 07083
Phone: 908-687-5000
Fax: 908-687-5710

TITLE

35P, AUTOMOBILE, 1.35*16.8 PIN

SIZE	PART NO.	REV.
X	ADT-AMYX7762311	-

REF: S00111C | SCALE: NTS | SHEET 1 OF 1

SPECIFICATIONS:
Environmental:
Lead free, RoHS compliant

RoHS COMPLIANT

Downloaded from Arrow.com.