SERIES: VSK-S1 | DESCRIPTION: AC-DC POWER SUPPLY

FEATURES

- up to 1 W continuous power
- compact board mount design
- universal input (85~305 Vac / 120~430 Vdc)
- single output from 3.3~24 Vdc
- over current and short circuit protection
- UL/cUL and CE safety approvals
- efficiency up to 75%

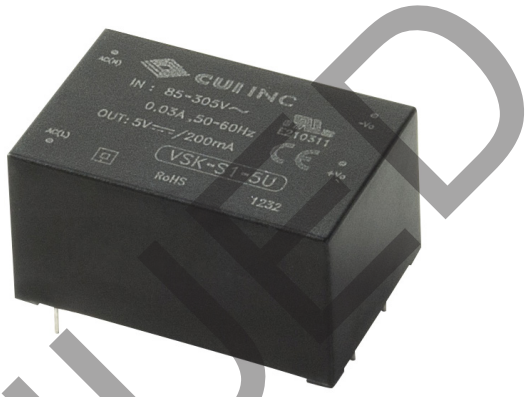

MODEL	output voltage (Vdc)	output current max (mA)	output power max (W)	ripple and noise[1] max (mVp-p)	efficiency typ (%)
VSK-S1-3R3U	3.3	300	1	200	63
VSK-S1-5U*	5	200	1	200	68
VSK-S1-9U*	9	111	1	200	72
VSK-S1-12U*	12	83	1	200	73
VSK-S1-15U*	15	67	1	200	74
VSK-S1-24U*	24	42	1	200	75

Notes: 1. At full load 20 MHz bandwidth oscilloscope, see Test Configuration section.
2. * Discontinued model.

PART NUMBER KEY

VSK-S1 - XX U

Base Number — Output Voltage

DISCONTINUED

Please read our datasheet & drawing disclaimer here.
Downloaded from Arrow.com.

INPUT

parameter	conditions/description	min	typ	max	units
voltage		85 120		305 430	Vac Vdc
frequency		47		63	Hz
current	at 115 Vac at 230 Vac			37 21	mA mA
inrush current	at 115 Vac at 230 Vac		7 14		A A
leakage current				0.15	mA
no load power consumption				0.2	W

OUTPUT

parameter	conditions/description	min	typ	max	units
maximum capacitive load	3.3 and 5 Vdc output models 9 and 12 Vdc output models 15 Vdc output model 24 Vdc output model			4,000 2,200 1,000 680	µF µF µF µF
line regulation	at full load		±2		%
load regulation	at 10 ~ 100% load		±5		%
voltage accuracy	3.3 Vdc model all other models		±6 ±5		% %
switching frequency				100	kHz

PROTECTIONS

parameter	conditions/description	min	typ	max	units
over current protection	auto restart	110			%
short circuit protection	continuous, auto restart				

SAFETY & COMPLIANCE

parameter	conditions/description	min	typ	max	units
isolation voltage	input to output for 1 minute	3,000			Vac
safety approvals	UL 60950-1				
safety class	class II				
conducted/radiated emissions	CISPR22/EN55022 Class B				
ESD	IEC/EN61000-4-2 class B, contact ±4kV, air ±8kV				
radiated immunity	IEC/EN61000-4-3 class A, 10V/m				
EFT/burst	IEC/EN61000-4-4 class B, ±2kV (external circuit required, see figure 3)				
surge	IEC/EN61000-4-5 class B, ±2kV (external circuit required, see figure 3)				
conducted immunity	IEC/EN61000-4-6 class A, 10 Vr.m.s				
PFM	IEC/EN61000-4-8 class A, 10 A/m				
voltage dips & interruptions	IEC/EN61000-4-11 class B, 0%-70%				
MTBF	as per MIL-HDBK-217F, 25°C	300,000			hours
RoHS	2011/65/EU				

ENVIRONMENTAL

parameter	conditions/description	min	typ	max	units
operating temperature	see derating curves	-25		70	°C
storage temperature		-25		85	°C
operating humidity	non-condensing			90	%
storage humidity	non-condensing			95	%

DISCONTINUED

Downloaded from Arrow.com.

DERATING/EFFICIENCY CURVES

output power vs. ambient temperature
(85~305 Vac; 120~430 Vdc)

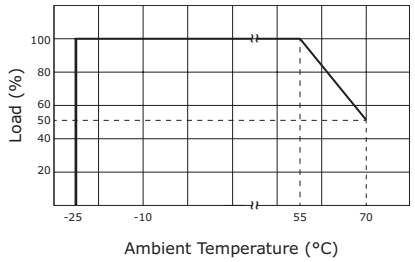

output power vs. input voltage
(25°C)

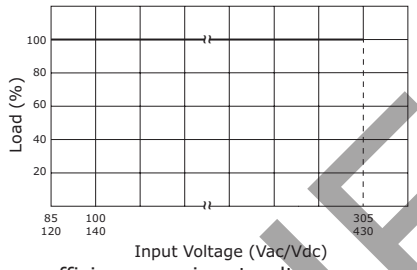

efficiency vs. output power
(Vin=230 Vac)

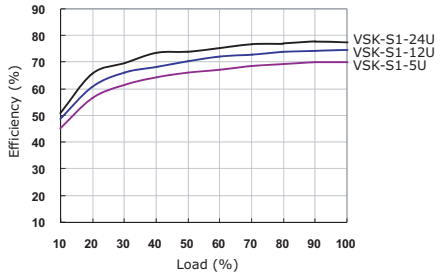

efficiency vs. input voltage
(full load)

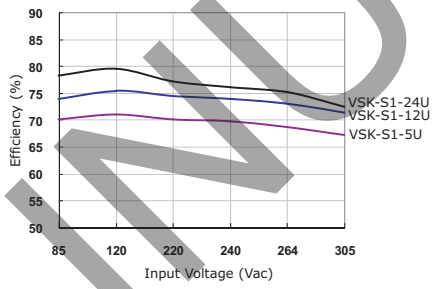

MECHANICAL

parameter	conditions/description	min	typ	max	units
dimensions	33.70 x 22.20 x 18.00 (1.327 x 0.874 x 0.708 inch)				mm
case material	UL94V-0				
weight			20		g

MECHANICAL DRAWING

units: mm [inches]
tolerance: ±0.50 [±0.020]
pin section tolerance: ±0.10 mm [±0.004]

PIN CONNECTIONS	
PIN	FUNCTION
1	AC(N)
2	AC(L)
3	-Vo
4	+Vo

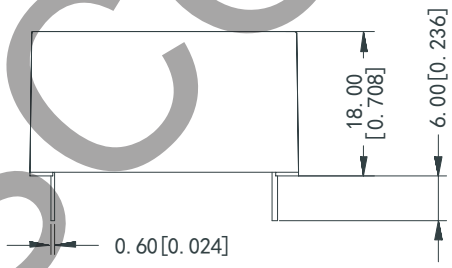

Front view

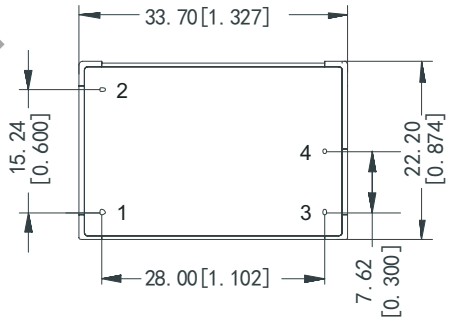

Bottom view

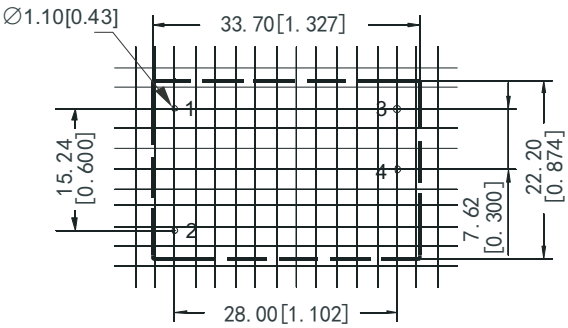

Recommended PCB Layout
Top View

DISCONTINUED

Downloaded from Arrow.com.

TEST CONFIGURATION

Figure 1

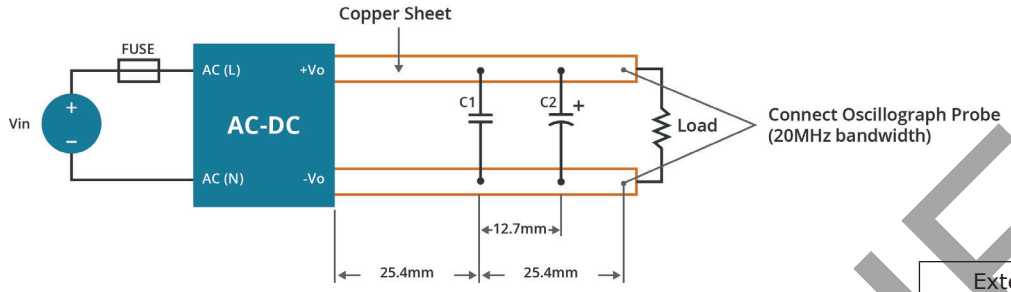

Table 1

External components	
C1	1µF ceramic
C2	10µF electrolytic

TYPICAL APPLICATION CIRCUIT

Figure 2

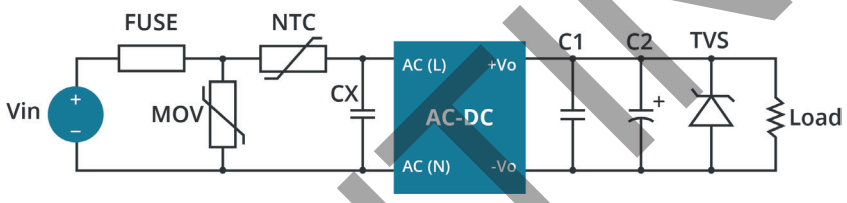

Table 2

Recommended external circuit components										
Model	FUSE	MOV	NTC	R1	CY3, CY4	CX	LCM	TVS[1]	C1[2]	C2[3]
VSK-S1-3R3U	1A/300V, slow blow	S14K350	10D-11	47Ω/3W	2.2nF/400V	0.4µF/305Vac	10 mH	SMBJ7.0A	1µF/50V	220µF
VSK-S1-5U	1A/300V, slow blow	S14K350	10D-11	47Ω/3W	2.2nF/400V	0.1µF/305Vac	10 mH	SMBJ7.0A	1µF/50V	220µF
VSK-S1-9U	1A/300V, slow blow	S14K350	10D-11	47Ω/3W	2.2nF/400V	0.1µF/305Vac	10 mH	SMBJ12A	1µF/50V	120µF
VSK-S1-12U	1A/300V, slow blow	S14K350	10D-11	47Ω/3W	2.2nF/400V	0.1µF/305Vac	10 mH	SMBJ20A	1µF/50V	120µF
VSK-S1-15U	1A/300V, slow blow	S14K350	10D-11	47Ω/3W	2.2nF/400V	0.1µF/305Vac	10 mH	SMBJ20A	1µF/50V	120µF
VSK-S1-24U	1A/300V, slow blow	S14K350	10D-11	47Ω/3W	2.2nF/400V	0.1µF/305Vac	10 mH	SMBJ30A	1µF/50V	68µF

EMC RECOMMENDED CIRCUIT

Figure 3

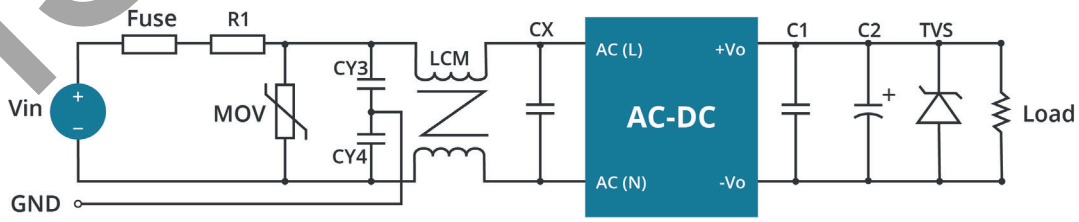

Notes:
1. See Table 2 for EMC components.
2. TVS is a recommended component to protect post-circuits if converter fails.
3. C1 is a ceramic capacitor used to filter high frequency noise.
4. C2 is an electrolytic capacitor. We recommend using high frequency and low impedence electrolytic capacitors. For capacitance and current of capacitor please refer to the manufacture's datasheet. Voltage derating of capacitor should be 80% or above.
5. All specifications are measured at rated input voltage, rated output load, TA=25°C, and humidity < 75% unless otherwise specified.

DISCONTINUED

Downloaded from Arrow.com.

REVISION HISTORY

rev.	description	date
1.0	initial release	06/04/2012
1.01	picture updated	09/06/2012
1.02	updated derating curves and spec	11/12/2013
1.03	internal inductor & PCB structure changed	10/26/2015
1.04	company logo updated	10/30/2020
1.05	circuit figures updated	01/11/2021
1.06	discontinued models VSK-S1-9U, VSK-S1-15U & VSK-S1-24U	11/11/2022
1.07	discontinued model VSK-S1-12U, VSK-S1-5U	12/14/2022

The revision history provided is for informational purposes only and is believed to be accurate.

DISCONTINUED

CUI INC
a bel group

Headquarters
20050 SW 112th Ave.
Tualatin, OR 97062
800.275.4899

Fax 503.612.2383
cui.com
techsupport@cui.com

CUI offers a two (2) year limited warranty. Complete warranty information is listed on our website.

CUI reserves the right to make changes to the product at any time without notice. Information provided by CUI is believed to be accurate and reliable. However, no responsibility is assumed by CUI for its use, nor for any infringements of patents or other rights of third parties which may result from its use.

CUI products are not authorized or warranted for use as critical components in equipment that requires an extremely high level of reliability. A critical component is any component of a life support device or system whose failure to perform can be reasonably expected to cause the failure of the life support device or system, or to affect its safety or effectiveness.

Downloaded from Arrow.com.