Connector Location A

Connector Location B

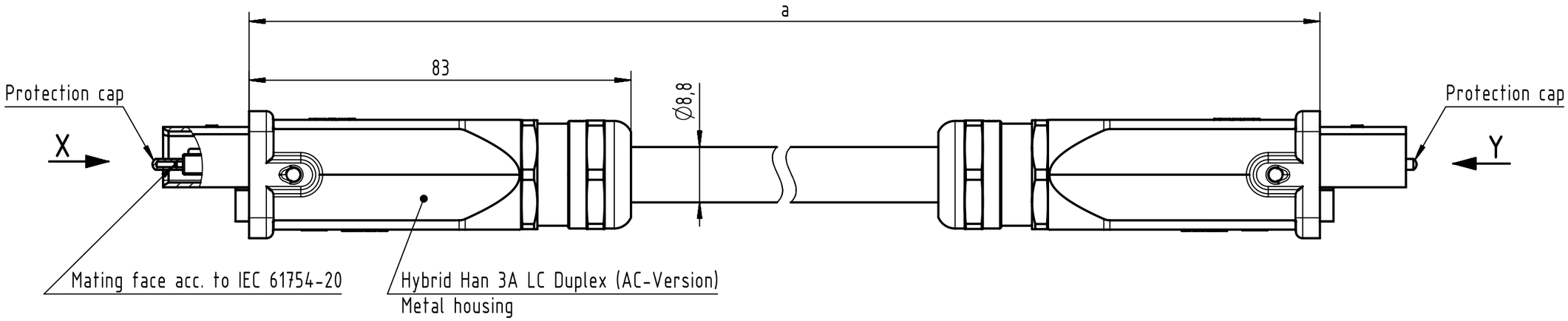

X
male
(without protection cap)

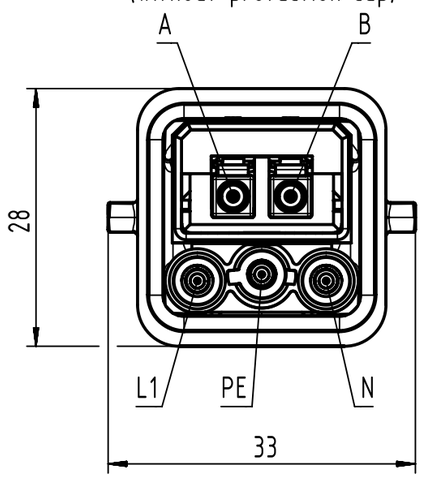

Loading-Plan
(Power AC version)

Shield (not connected)

A	Orange 1	B
B	Orange 2	A
L1	Black	L1
N	Blue	N
PE	Green-Yellow	PE

Y
male
(without protection cap)

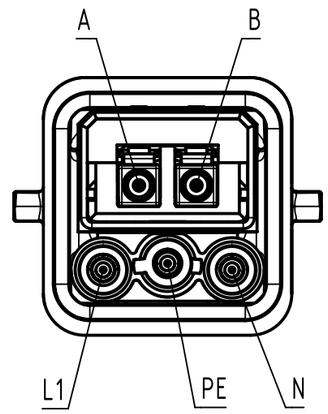

- Protection level: IP65/67
- Temperature range: -40°C...70°C

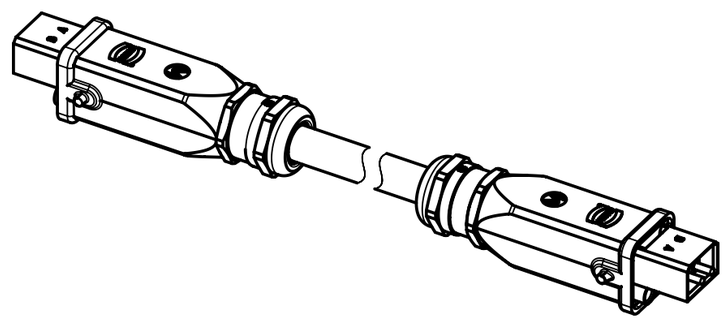

Cont No.	Part-No.	Type of cable	Dim. a (m)
9	33572113005003	Hybrid outdoor cable 2xFO Singlemode + 3x2.5mm²	300
8	33572111005003		100
7	33572110605003		60
6	33572110505003		50
5	33572110405003		40
4	33572110205003		20
3	33572110105003		10
2	33572110055003		5
1	33572110015003		1

All Dimensions in mm | Tech. Character. | Free size tol. | According to production drawing

All rights reserved

Department HCS - RO

HARTING Customised Solutions
D-32427 Minden

Created by	Inspected by	Standardisation	Date	State
COSTEA	MUNTEANV	AVRAM	2017-09-22	Final Release

Title: Han 3A FO Hybrid Cable Assembly

Doc-Key / ECM-Nr.: 100643403/UGD/036/C 500000125720

Type: TB | Number: 3357211XXX5003 | Rev.: C | Page: 1/1

A3

Downloaded from Arrow.com.