Product data sheet

Specifications



Emergency stop head, Harmony XB5, switching off, plastic, red mushroom 40mm, 22mm, trigger and latching turn to release

ZB5AS844

Main

Range of product	Harmony XB5
Product or component type	Head for emergency stop push-button
Product destination	Emergency stop push-button
Device short name	ZB5
Bezel material	Dark grey plastic
Head type	Standard
Mounting diameter	22.5 mm
Sale per indivisible quantity	1
Shape of signaling unit head	Round
Type of operator	trigger action and mechanical latching
Reset	Turn to release
Operator profile	Red mushroom Ø 40 mm, unmarked
Device presentation	Basic element

Complementary

CAD overall width	40 mm
CAD overall height	40 mm
CAD overall depth	57 mm
Net weight	0.046 kg
Mechanical durability	300000 cycles
Station name	XALD 1 cut-out XALK 1 cut-out
Electrical composition code	C7 for <4 contacts using single blocks in front mounting C8 for <4 contacts using single and double blocks in front mounting C11 for <3 contacts using single blocks in front mounting C15 for <1 contacts using single blocks in front mounting SF1 for <3 contacts using single blocks in front mounting SR1 for <3 contacts using single blocks in rear mounting C10 for <4 contacts using single and double blocks in front mounting
Compatibility code	ZB5

Environment

Protective treatment	TH
Ambient air temperature for storage	-40…70 °C
Ambient air temperature for operation	-40…70 °C

Disclaimer: This documentation is not intended as a substitute for and is not to be used for determining suitability or reliability of these products for specific user applications

Downloaded from Arrow.com.

Overvoltage category	Class II conforming to IEC 60536
IP degree of protection	IP66 conforming to IEC 60529 IP67 IP69 IP69K
Enclosure Type	UL type 4X/13
Resistance to high pressure washer	7000000 Pa at 55 °C, distance : 0.1 m
IK degree of protection	IK03 conforming to IEC 50102
Standards	UL 508 ISO 13850 IEC 60364-5-53 IEC 60204-1 GB 14048.5 JIS C8201-5-1 IEC 60947-5-4 CSA C22.2 No 14 IEC 60947-5-5 IEC 60947-1 IEC 60947-5-1 JIS C8201-1
Product certifications	CSA DNV BV LROS (Lloyds register of shipping) UL listed
Vibration resistance	5 gn (f= 2…500 Hz) conforming to IEC 60068-2-6
Shock resistance	30 gn (duration = 18 ms) for half sine wave acceleration conforming to IEC 60068-2-27 50 gn (duration = 11 ms) for half sine wave acceleration conforming to IEC 60068-2-27

Packing Units

Unit Type of Package 1	PCE
Number of Units in Package 1	1
Package 1 Height	5.400 cm
Package 1 Width	4.400 cm
Package 1 Length	8.800 cm
Package 1 Weight	41.000 g
Unit Type of Package 2	S03
Number of Units in Package 2	100
Package 2 Height	30.000 cm
Package 2 Width	30.000 cm
Package 2 Length	40.000 cm
Package 2 Weight	4.544 kg
Unit Type of Package 3	P06
Number of Units in Package 3	800
Package 3 Height	75.000 cm
Package 3 Width	60.000 cm
Package 3 Length	80.000 cm
Package 3 Weight	47.804 kg

Downloaded from Arrow.com.

Contractual warranty

Warranty (in months)	18

Downloaded from Arrow.com.

Environmental Data

Schneider Electric aims to achieve Net Zero status by 2050 through supply chain partnerships, lower impact materials, and circularity via our ongoing “Use Better, Use Longer, Use Again” campaign to extend product lifetimes and recyclability.

Environmental Data explained >

How we assess product sustainability >

Environmental footprint

Total lifecycle Carbon footprint	**0.4 kg CO2 eq.**
Carbon footprint of the manufacturing phase [A1 to A3]	**0.3 kg CO2 eq.**
Carbon footprint of the distribution phase [A4]	**0 kg CO2 eq.**
Carbon footprint of the installation phase [A5]	**0 kg CO2 eq.**
Carbon footprint of the use phase [B2, B3, B4, B6]	**0 kg CO2 eq.**
Carbon footprint of the end-of-life phase [C1 to C4]	**0.1 kg CO2 eq.**

Use Better

Materials and Substances

Average percentage of recycled plastic content	**7 %**
Average percentage of recycled metal content	**60 %**
Packaging made with recycled cardboard	**No**
Packaging without single use plastic	**No**
EU RoHS Directive	**Compliant**
REACh Regulation	**Free of Substances of Very High Concern above the threshold**
California proposition 65	**WARNING: This product can expose you to chemicals including: Nickel compounds, which is known to the State of California to cause cancer. For more information go to www.P65Warnings.ca.gov**

Use Again

Repack and remanufacture

Recyclability potential, in %	**21**
End of life manual availability	**End of Life Information**
Take-back	**No**

Downloaded from Arrow.com.

Dimensions Drawings

Dimensions

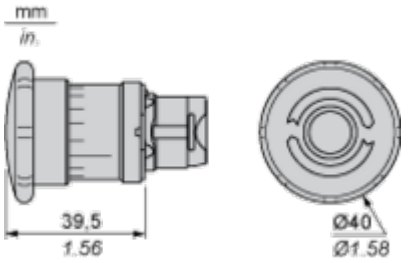

Downloaded from Arrow.com.

Mounting and Clearance

Panel Cut-out for Pushbuttons, Switches and Pilot Lights (Finished Holes, Ready for Installation)

Connection by Screw Clamp Terminals or Plug-in Connectors or on Printed Circuit Board

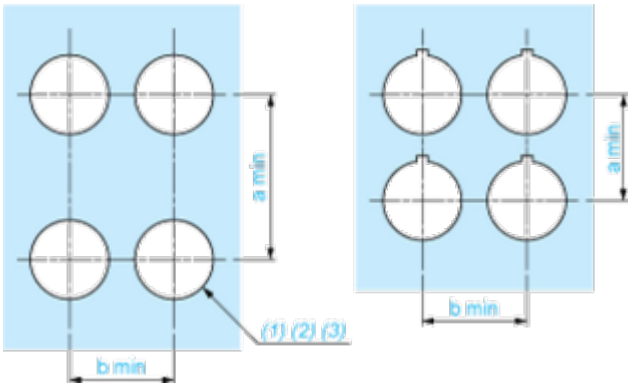

(1) Diameter on finished panel or support
(2) For selector switches and Emergency stop buttons, use of an anti-rotation plate type ZB5AZ902 is recommended.
(3) Ø22.5 mm recommended (Ø22.3 $_{0}^{+0.4}$) / Ø0.89 in. recommended (Ø0.88 in. $_{0}^{+0.016}$)

Connections	a in mm	a in in.	b in mm	b in in.
By screw clamp terminals or plug-in connector	40	1.57	30	1.18
By Faston connectors	45	1.77	32	1.26
On printed circuit board	30	1.18	30	1.18

Detail of Lug Recess

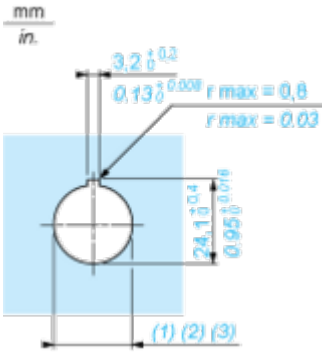

(1) Diameter on finished panel or support
(2) For selector switches and Emergency stop buttons, use of an anti-rotation plate type ZB5AZ902 is recommended.
(3) Ø22.5 mm recommended (Ø22.3 $_{0}^{+0.4}$) / Ø0.89 in. recommended (Ø0.88 in. $_{0}^{+0.016}$)

Downloaded from Arrow.com.

Pushbuttons, Switches and Pilot Lights for Printed Circuit Board Connection

Panel Cut-outs (Viewed from Installer's Side)

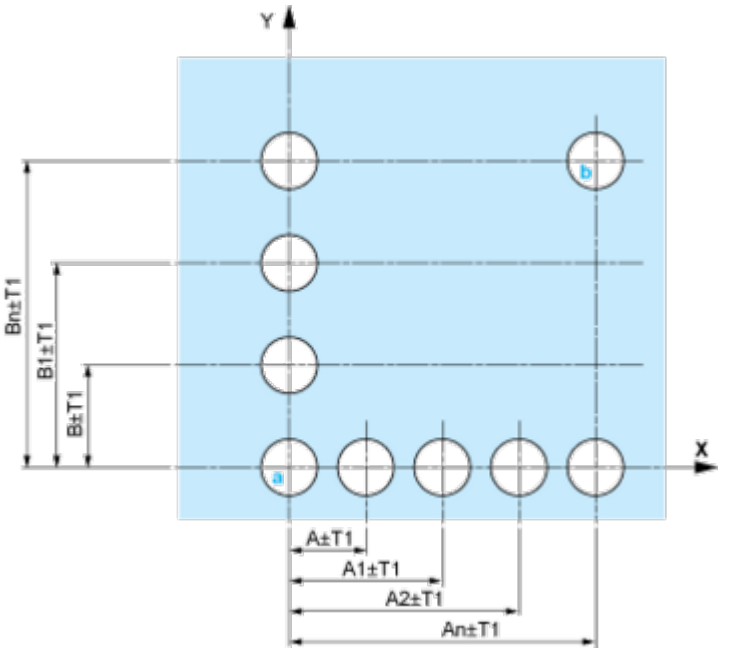

A: 30 mm min. / 1.18 in. min.
B: 40 mm min. / 1.57 in. min.

Printed Circuit Board Cut-outs (Viewed from Electrical Block Side)

Dimensions in mm

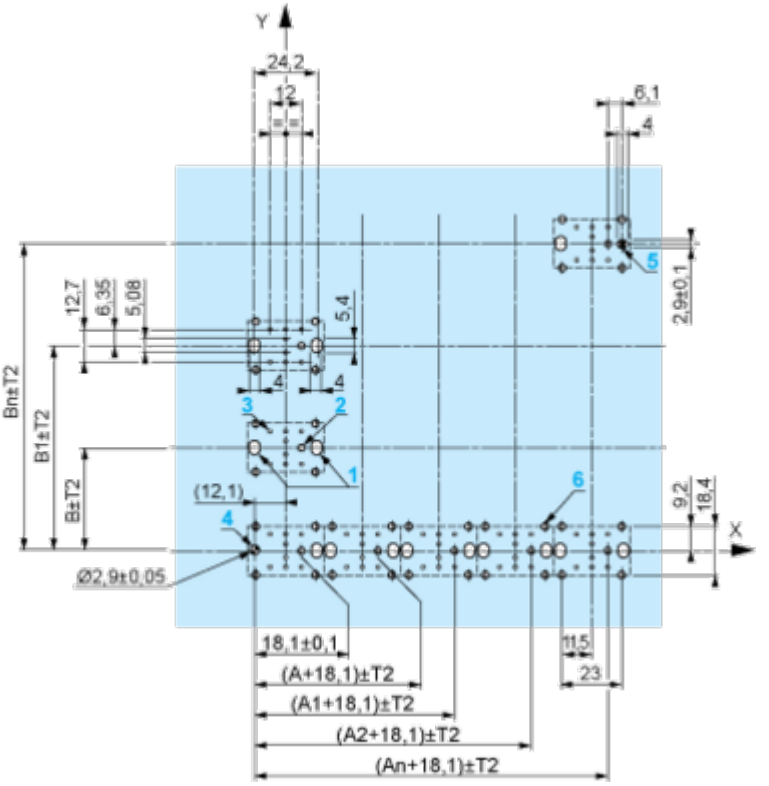

A: 30 mm min.
B: 40 mm min.
Dimensions in in.

Downloaded from Arrow.com.

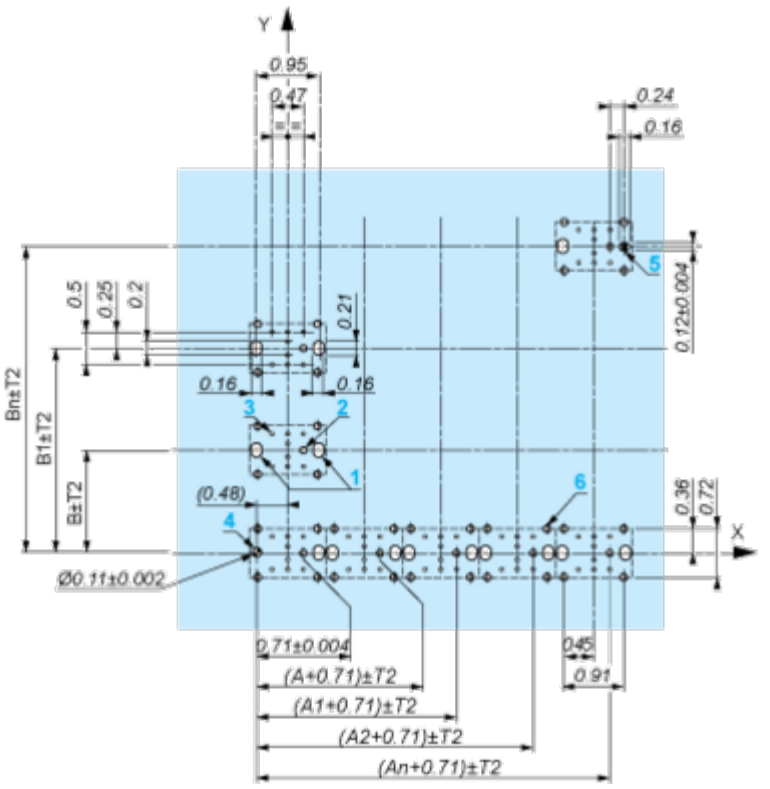

A: 1.18 in. min.
B: 1.57 in. min.

General Tolerances of the Panel and Printed Circuit Board

The cumulative tolerance must not exceed 0.3 mm / 0.012 in.: T1 + T2 = 0.3 mm max.

Installation Precautions

- Minimum thickness of circuit board: 1.6 mm / 0.06 in.
- Cut-out diameter: 22.4 mm ± 0.1 / 0.88 in. ± 0.004
- Orientation of body/fixing collar ZB5AZ009: ± 2°30' (excluding cut-outs marked **a** and **b**).
- Tightening torque of screws ZBZ006: 0.6 N.m (5.3 lbf.in) max.
- Allow for one ZB5AZ079 fixing collar/pillar and its fixing screws:
  - every 90 mm / 3.54 in. horizontally (X), and 120 mm / 4.72 in. vertically (Y).
  - with each selector switch head (ZB5AD•, ZB5AJ•, ZB5AG•).

The fixing centers marked **a** and **b** are diagonally opposed and must align with those marked **4** and **5**.

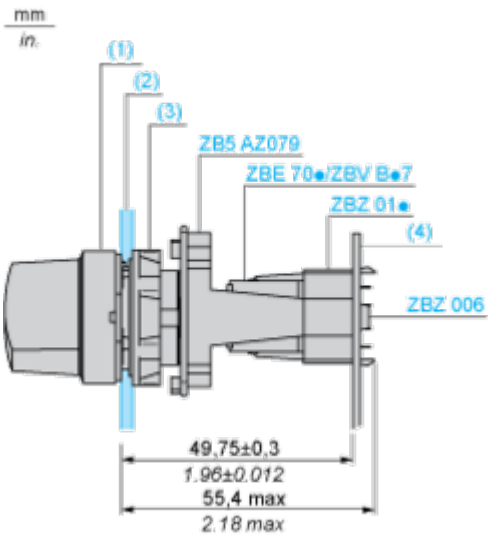

Downloaded from Arrow.com.

(1) Head ZB5AD•
(2) Panel
(2) Nut
(4) Printed circuit board

Mounting of Adapter (Socket) ZBZ01•

- **1** 2 elongated holes for ZBZ006 screw access
- **2** 1 hole Ø 2.4 mm ± 0.05 / 0.09 in. ± 0.002 for centring adapter ZBZ01•
- **3** 8 × Ø 1.2 mm / 0.05 in. holes
- **4** 1 hole Ø 2.9 mm ± 0.05 / 0.11 in. ± 0.002, for aligning the printed circuit board (with cut-out marked **a**)
- **5** 1 elongated hole for aligning the printed circuit board (with cut-out marked **b**)
- **6** 4 holes Ø 2.4 mm / 0.09 in. for clipping in adapter ZBZ01•

Dimensions An + 18.1 relate to the Ø 2.4 mm ± 0.05 / 0.09 in. ± 0.002 holes for centring adapter ZBZ01•.

Downloaded from Arrow.com.

Technical Description

Electrical Composition Corresponding to Code C7

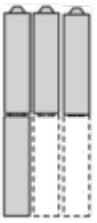

Schneider Electric

Downloaded from Arrow.com.

Electrical Compositions Corresponding to Code C8

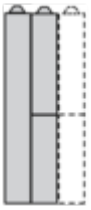

Downloaded from Arrow.com.

Electrical Compositions Corresponding to Code C10

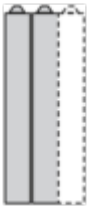

Schneider Electric

Downloaded from Arrow.com.

Electrical Composition Corresponding to Codes C9, C11, SF1 and SR1



Downloaded from Arrow.com.

Electrical Composition Corresponding to Code C15

1 N/O

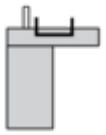

1 N/C

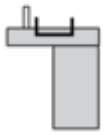

1 N/O + N/C or 1 N/O + N/O or 1 N/C + N/C

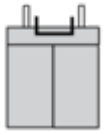

Schneider Electric

Downloaded from Arrow.com.

Legend

Single contact



Double contact



Light block



Possible location



Downloaded from Arrow.com.

Image of product / Alternate images

Alternative





Schneider Electric

Downloaded from Arrow.com.





Downloaded from Arrow.com.





Downloaded from Arrow.com.