NOTE
All numerical values are in metric units [with U.S. customary units in brackets]. Dimensions are in millimeters [and inches]. Unless otherwise specified, dimensions have a tolerance of ±0.13 [±.005] and angles have a tolerance of ±2°. Figures and illustrations are for identification only and are not drawn to scale.

1. INTRODUCTION

This specification covers the requirements for application of MONO-SHAPE Mark I IDC connectors, tab version, designed for RAST 5 mm counterpart. The electrical connection is produced by spring pairs on tabs 6.3 mm wide, designed according to DIN 46244 Part 6. Connectors are delivered fully loaded with insulation displacement contacts.

Basic terms and features of this product are provided in Figure 1.

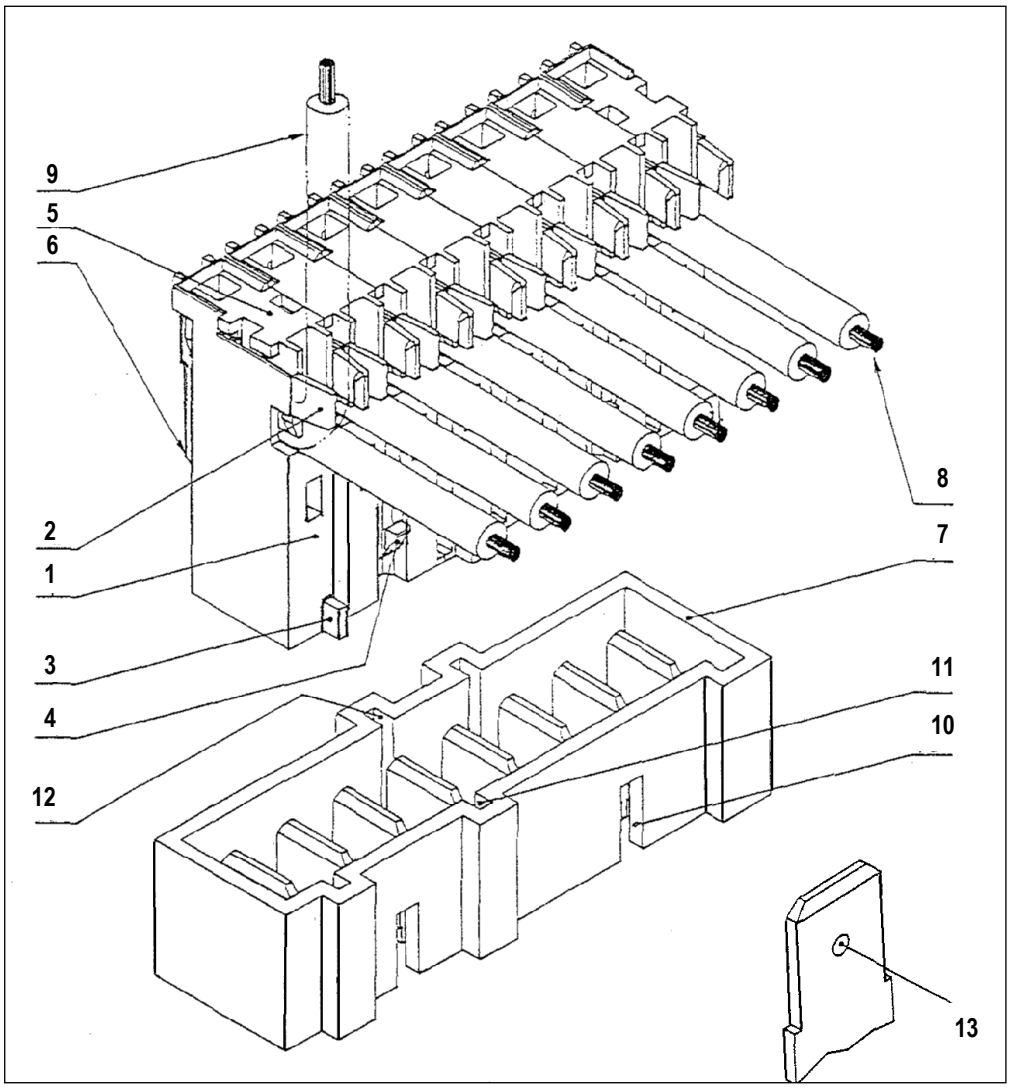

Figure 1 (continued)

© 2020 TE Connectivity Ltd. family of companies.
All Rights Reserved.
*Trademark

TE Connectivity, TE connectivity (logo), and TE (logo) are trademarks. Other logos, product, and/or company names may be trademarks of their respective owners.

Downloaded from Arrow.com.

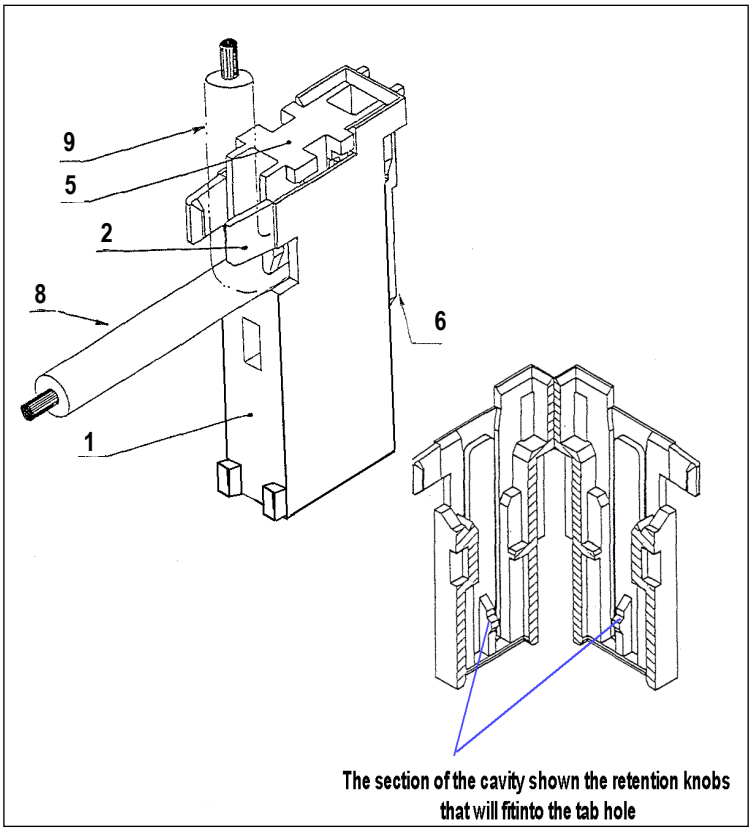

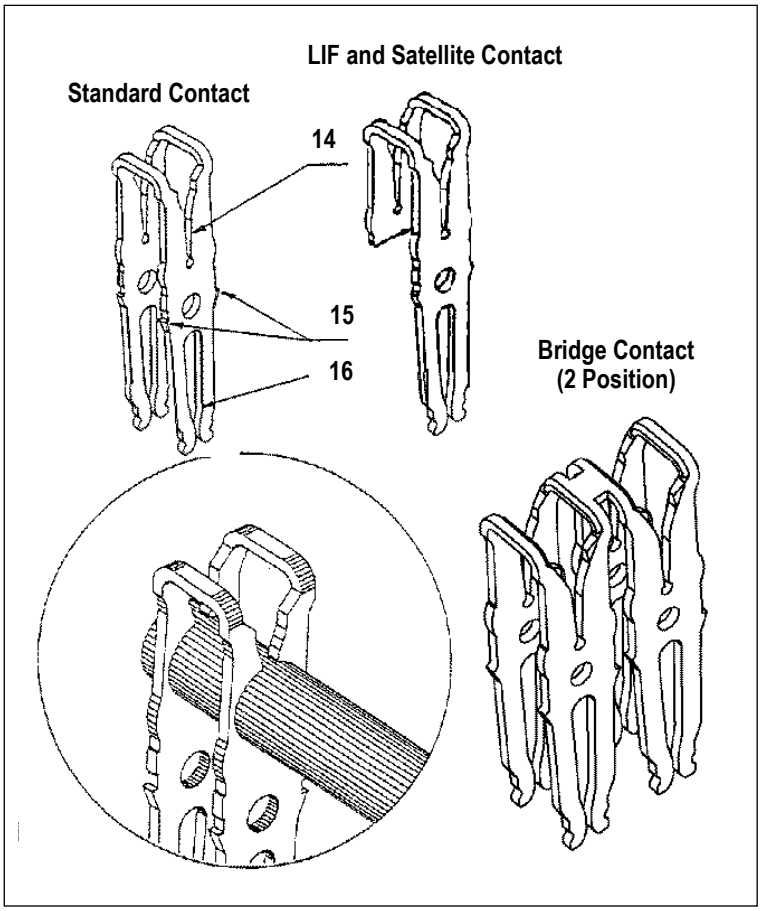

Figure 1 (continued)

Downloaded from Arrow.com.

Key Feature Number	Feature Description
1	Front
2	Connecting Tab
3	Keying ribs
4	Retention ribs
5	Cover
6	Polarization
7	Mating part
8	90° wires exit
9	180° wires exit
10	Cavities for locking latches
11	Cavity for keying ribs
12	Cavities for polarization
13	Retention knob hold on tab counterpart
14	"V"-shaped slot (electrical connection) for insulation displacement
15	Retention features (acting on cavity)
16	Contact springs (for 6.3 x 0.8 mm DIN tabs)

Figure 1 (end)

2. REFERENCE MATERIAL

2.1. Revision Summary

Revisions to this Application Specification include:

- Updated document format to corporate standard.
- Added 0.35 mm^2 wire size.

2.2. Customer Assistance

Reference Product Base Part Number (available on the product drawing) and Product Codes 316, 319, 321, 322, 324 are representative of MONO-SHAPE Mark I IDC connectors, tab version. Use of these numbers will identify the product line and help you to obtain product and tooling information when visiting www.te.com or calling the number at the bottom of page 1.

2.3. Drawings

Customer drawings for product part numbers are available from www.te.com. Information contained in the customer drawing takes priority.

282002	MONO-SHAPE Mark I Tab Connectors 2 – 10 Positions
282086	MONO-SHAPE Mark I Single Way Connector Assembly
282099	MONO-SHAPE Satellite Connector
284288	MONO-SHAPE Mark I Tab Bridge Connectors
284338	MONO-SHAPE L.I.F. Tab Connectors 2 – 10 Positions

Downloaded from Arrow.com.

2.4. Specifications

Product Specifications (108-series) provide product performance and test results.

108-20065 Product Specification for Standard Tabs
108-20070 Product Specification for Satellite and Bridge Special Versions
108-20215 Product Specification for L.I.F. Connectors – 2 Contact Points

2.5. Instructional Material

Instruction sheets (408-series) provide product assembly instructions or tooling setup and operation procedures and customer manuals (409-series) provide machine setup and operating procedures. Instructional material that pertain to this product are:

107-20065 Packaging Specification for AMP MONO-SHAPE Connector
412-18756 Instruction Sheet for Hand Tool (P/N 528015-7)

3. REQUIREMENTS

3.1. Safety

Do not stack product shipping containers so high that the containers buckle or deform.

3.2. Storage

A. Ultraviolet Light

Prolonged exposure to ultraviolet light may deteriorate the chemical composition used in the product material.

B. Shelf Life

The product should remain in the shipping containers until ready for use to prevent deformation to components. The product should be used on a first in, first out basis to avoid storage contamination that could adversely affect performance.

C. Chemical Exposure

Do not store product near any chemical listed below as they may cause stress corrosion cracking in the material.

Alkalies	Ammonia	Citrates	Phosphates Citrates	Sulfur Compounds
Amines	Carbonates	Nitrites	Sulfur Nitrites	Tartrate

3.3. Packaging

Figure 2 shows the packing methods for this connector and the direction along which the connectors are aligned on the tray. The connectors are linked in chains by the connecting tabs. The cover shall be connected to the housing as shown. Details of the packaging are reported in the Packaging Specification.
Few connecting tabs missing are acceptable without affecting the chaining retention.

Downloaded from Arrow.com.

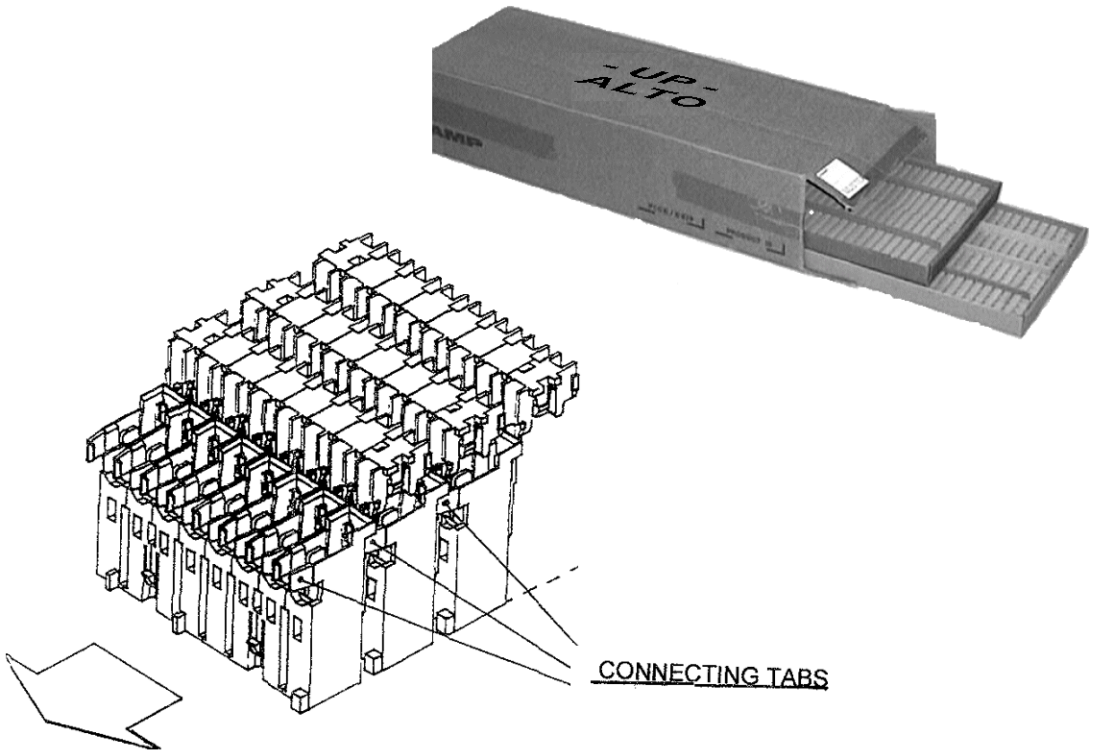

Figure 2

3.4. Wire Selection

A. Wire Size

Figure 3 lists wire sizes suitable for MONO-SHAPE products in order to satisfy product performance.

B. Wire Insulation Material

PVC material is preferred; shore hardness for insulation material is requested to be A92 tolerance +5 and -3.

NOTE
Different stranded wires or AWG size wire (such as UL cable 20-16 AWG Style 1015/CSA TEW) can also be used on connectors for special applications. Other type of wire shall not be used without TE Connectivity Engineering approval.

C. Wire Dimensions (according to CEI 20-20/3 – 20/7)

Stranded conductors of the wire suitable for a proper termination must be within the requirements of Figure 3.

Wire Size [mm²]	Wire Type	Insulation Material	Wire Strand Bundle Diameter [mm]	Insulation Diameter (max) [mm]	Single Strand Diameter (min) [mm]	Number of Strands
0.50	H05V-K or H05V2-K	PVC	1.0	2.4	0.21	16
0.75	H05V-K or H05V2-K	PVC	1.2	2.5	0.21	24
1.00	H05V-K or H05V2-K	PVC	1.4	2.8	0.21	32
1.50	H05V-K or H05V2-K	PVC	1.6	3.0	0.26	30

Figure 3 (continued)

Downloaded from Arrow.com.

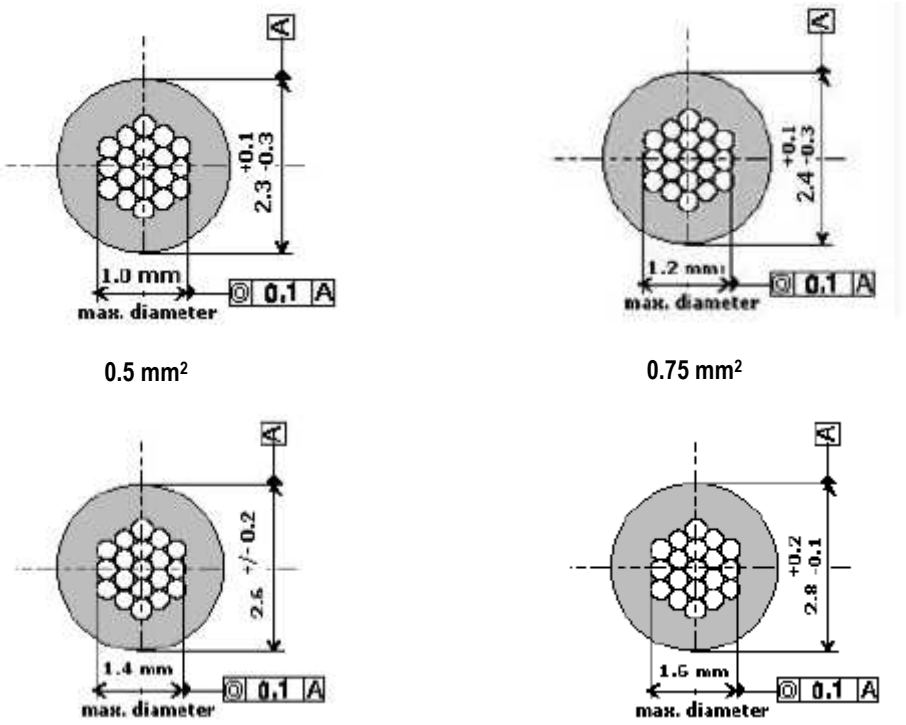

Figure 3 (end)

3.5. Connector Requirements

Dimensions, functions and appearance of this product must conform to the following requirements after termination.

A. Contact

The contact should not be visibly deformed. Contacts shall not show any kind of damage caused by the application of the wire by the insulation displacement termination technique.

B. Center Position of the Termination Slot

The center position of the termination slot has to conform to the given symmetric tolerances as indicated on the product drawing and sketched in Figure 4.

Downloaded from Arrow.com.

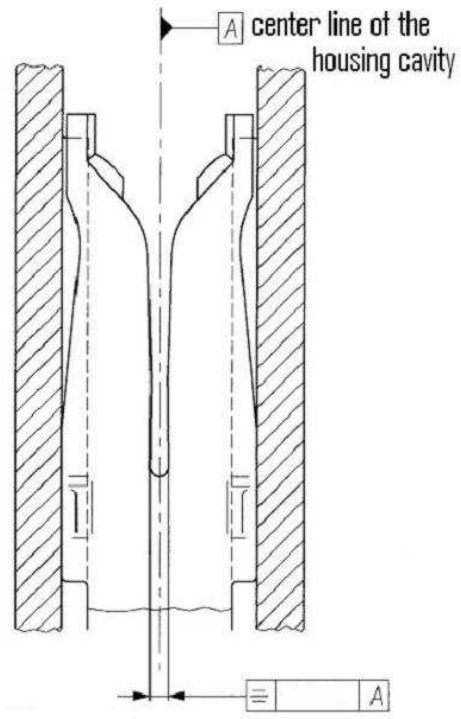

Figure 4

C. Visual Inspection

The following features are to be checked with reference to Figure 5.

Feature Number	Feature Description
1	Control zone of the contact after termination
2	Retention pins for contact cavity application
3	Cover clip front retention
3a, 4a	Slots for cover front and back retention
4	Cover clip for back retention
5	Additional cover retention on lateral end ways
6	Contact position in housing (1.6+0.2/-0.4mm)

Figure 5 (continued)

Downloaded from Arrow.com.

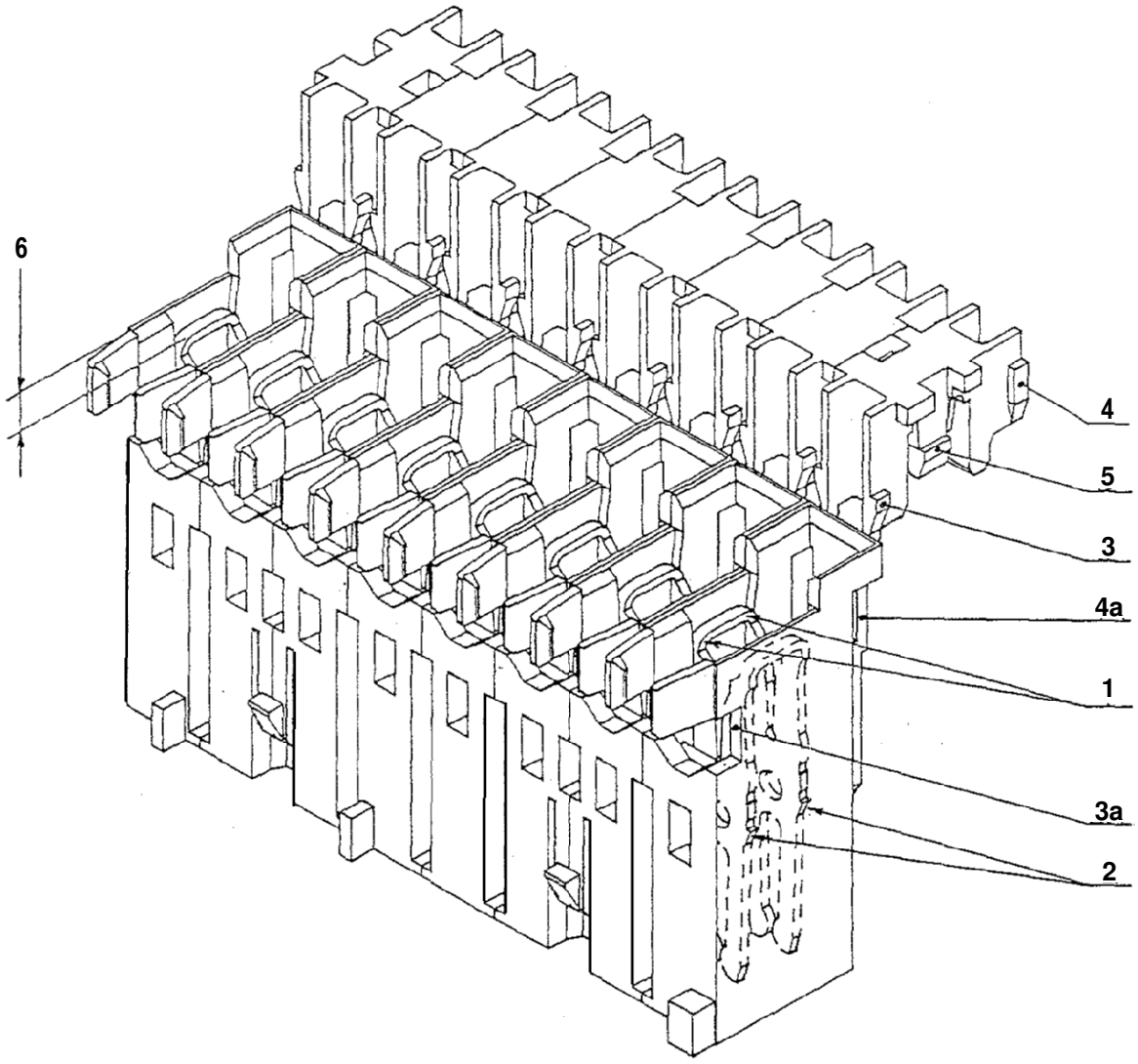

Figure 5 (end)

D. Contact Retention in Housing

The contact retention in the cavity is provided by the retention pins as shown in Figure 5, Feature 2. The product is supplied with all contacts loaded. The retention feature is dimensioned and shaped properly to avoid loosening of terminals due to connector handling before wire termination.

E. Wire Insertion Depth

An essential characteristic for the correct function of the insulation displacement technique is the wire insertion depth. The displacement of the insulation material caused by the “V” shaped slot in the contact assures the electrical connection. An examination of wire insertion depth is required. The wire strand shape will vary according to the different cross-section sizes of the wire in the contact zone. Dimension A in Figure 6 must be within the required limits. This dimension is the same for all wire sizes.

F. Position of Contact Within the Housing

After completion of all operations, the contact shall fit into the housing correctly. The application of the wire to the contact will cause the contact to be pushed deeper into the cavity, especially in cases of large wire sizes. Dimension 6 in Figure 5 must be within the required limits.

Downloaded from Arrow.com.

Feature Letter	Description	Nominal Dimension [mm]	Tolerance [mm]
A	Wire Insertion Depth	17.3	+0.1/-0.3

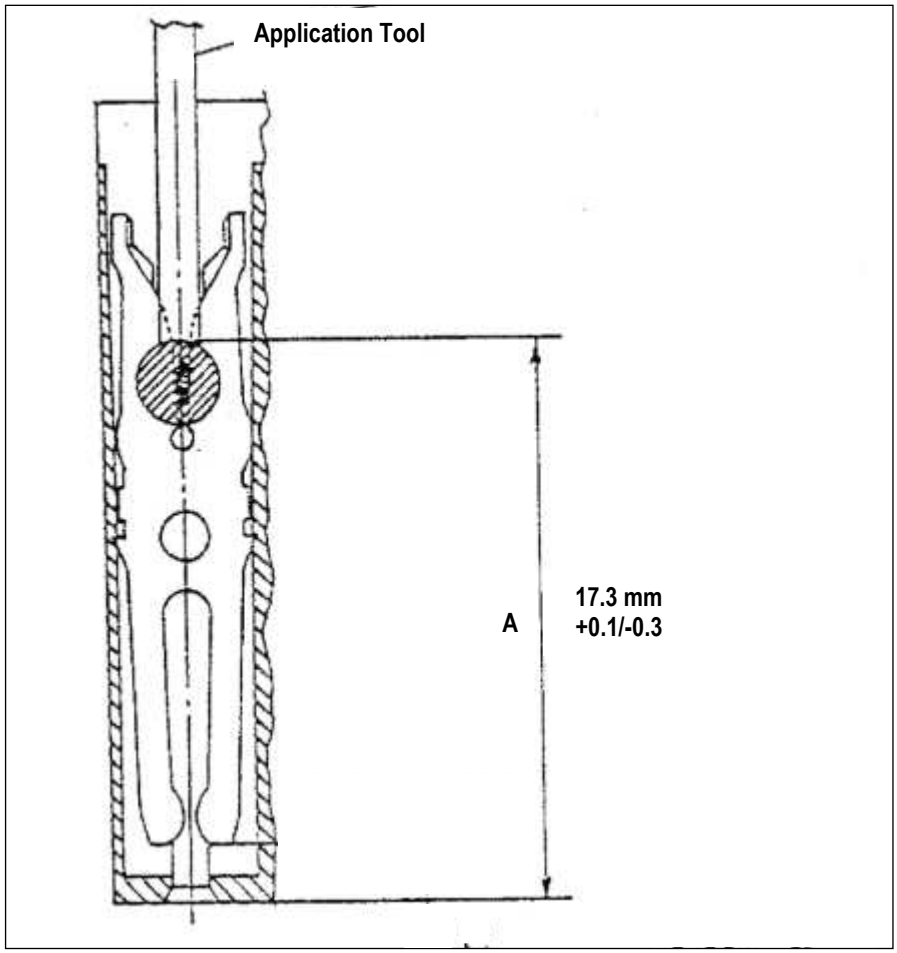

Figure 6

G. Wire Position Inside of Housing

The application of the wire inside the housing shall be checked as shown on Figure 7, Feature D. To avoid incorrect termination, wires must not touch the housing walls. Features A and E in Figure 7 must be checked as well. Burr dimensions (Feature A) due to cover removal cut-off may not exceed 1 mm maximum. After the polarization, the cut-off dimension (Feature E) must be 9 mm +0.4 mm/-0.1 mm.

H. Cover Position

The cover assures the wire strain relief and the covering of the connection, which helps to maintain the connections secure during the handling of the cables. Features B and C in Figure 7 show relevant features. The front and back retentions of the cover shall be positioned on the housing as shown. The application of the cover does not cause the displacement of the insulation materials of the wires. The cover is designed to fasten the connections between the wires and the contacts.

Downloaded from Arrow.com.

Feature Letter	Description	Dimension [mm]
A	Burr Dimension	1.0 (maximum)
B	Front Cover Retention Feature	[redacted]
C	Back Cover Retention Feature	
D	Distance Between Wire and Housing	0.6 (maximum); Wire not to contact housing
E	Cut-Off Dimension	9 mm (+0.4/-0.1)

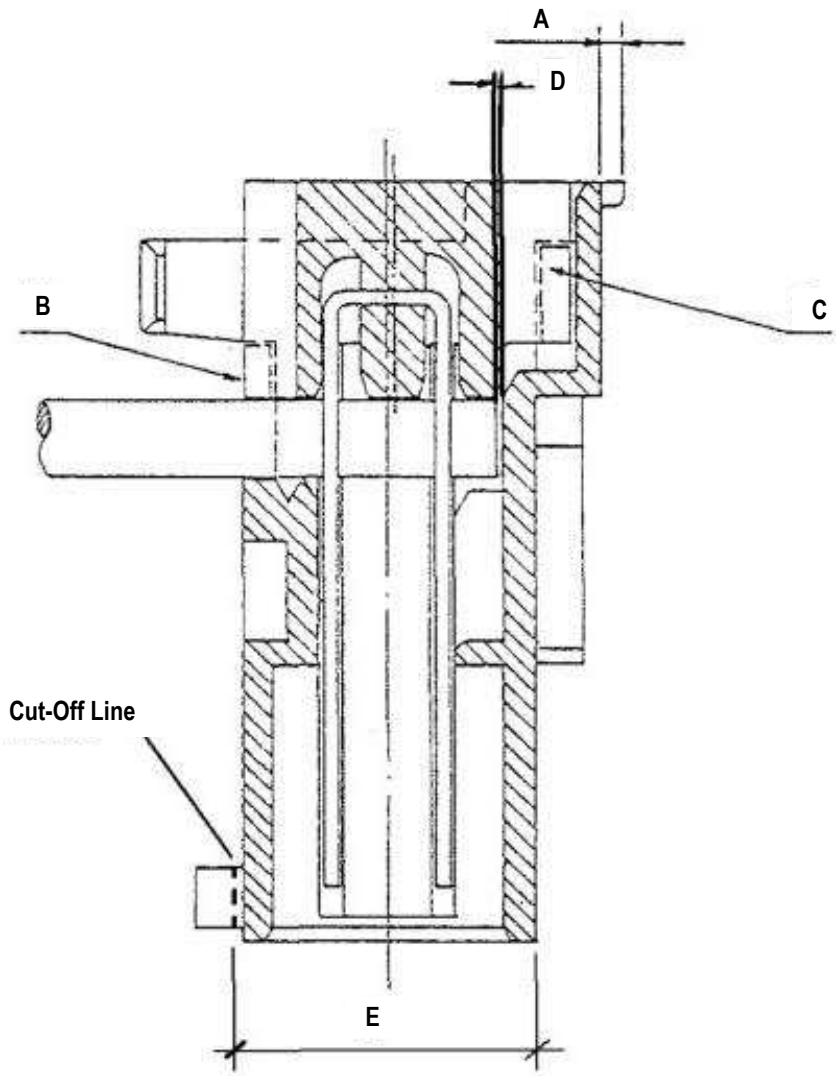

Figure 7

I. Cable Conditions

When terminated on MHM machine, ensure that wires are not compressed or deformed, creating a bulge, or deforming plastic. See Figure 8 and Figure 9. for acceptable and unacceptable conditions.

Downloaded from Arrow.com.

Acceptable
Cable Conditions

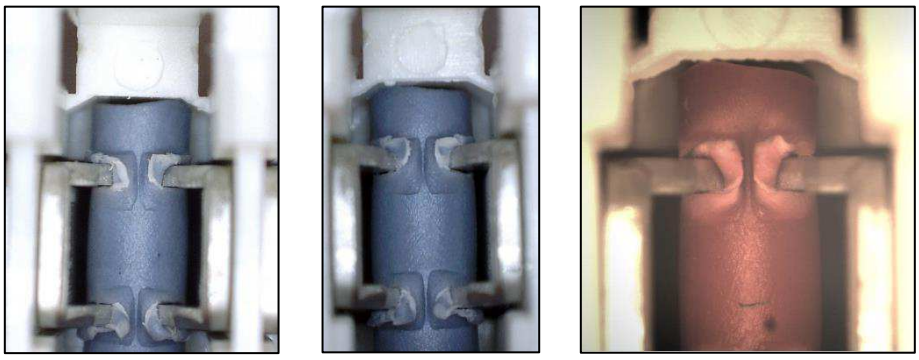

Figure 8

Unacceptable
Cable Conditions

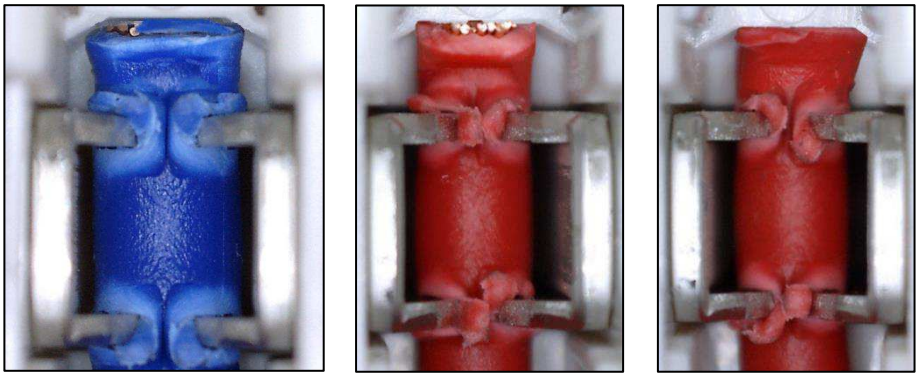

Figure 9

J. Cover Retention

Lateral end ways (first and last) assure an additive locking of the cover by means of pins latching the contacts as shown on Figure 10.

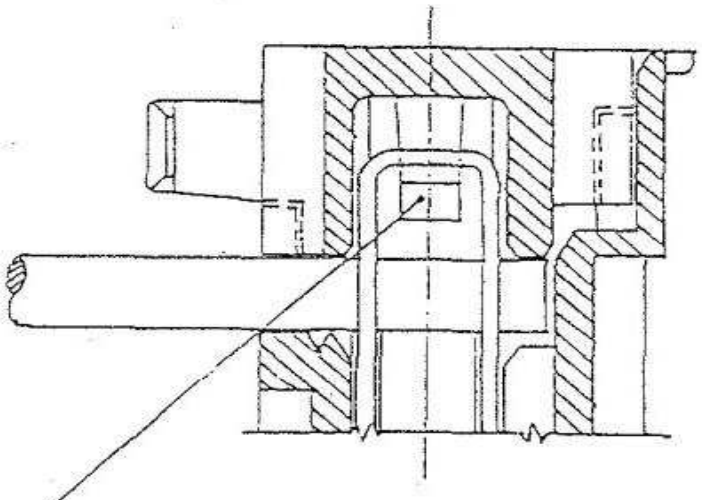

ADDITIONAL RETENTION

Figure 10

Downloaded from Arrow.com.

K. Housing and Cover Height

The total height of the connectors after termination and cover closing shall be within the specification in Figure 11.

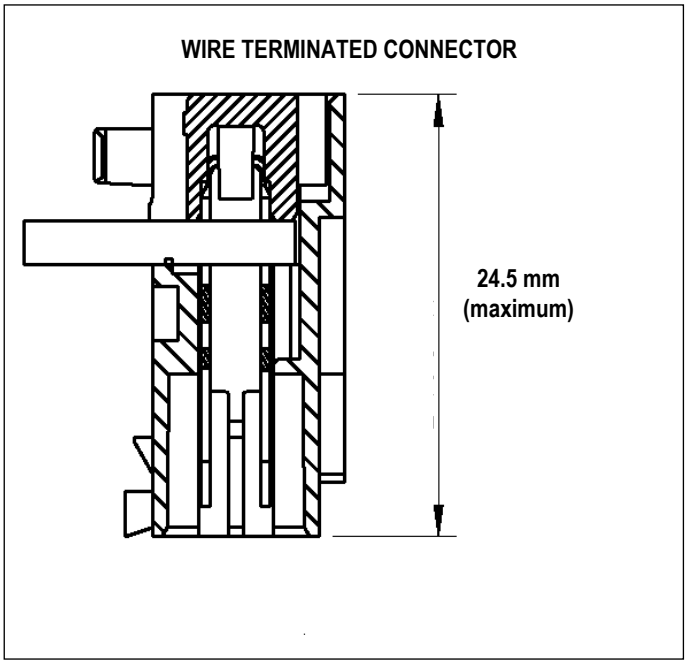

Figure 11

L. Inspection of Wires in IDC Slots

The position and disposal of the wire strands into the IDC slots is a means to be confident that production will fully meet the requirements of a good connection in terms of electro-mechanical performance. This control should be made each time that variables occur on the product, the application tools or the IDC harness process. (Variables are external factors not mentioned in this specification but could be added by the operators such as improper use of the application tooling, environments, dust, etc.)

The method suggested for examining the strands is known as the cross-section method. This method is destructive and consists in preparing a test connector sample straining cold resin in a special plastic shell (in which the connector sample has been properly fixed) using a resin added with a hardening component (max temperature increasing during hardening process 40°C e.g. resin type CYB-GEIGY ARALDIT D + HY 956). When the resin is completely hardened (approximately six hours), take the cross section and polish the surface to be examined.

Figure 12 shows a cross section of a correct termination. The wire strands are compressed into the “V” slot of the IDC contact and approximately 40% of the strands are in contact with the slot blade. The PVC is separate from the copper wire in the slot. This is representative of a good and stable electrical connection.

Figure 13 shows a cross section of a poor termination. The wire strands are not compressed and not in contact with the slot blade. The wire is not completely inserted into the slot and the PVC separation is incomplete. This is representative of a non-stable and poor electrical connection.

Downloaded from Arrow.com.

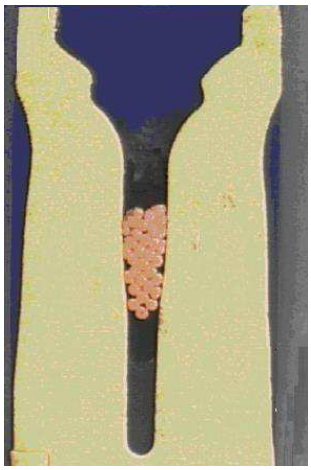

Figure 12



Figure 13

4. QUALIFICATION

4.1. Underwriters Laboratories Inc. (UL)

MONO-SHAPE Mark I IDC connectors are recognized by Underwriters Laboratories Inc. (UL) in File E28476, Report Issue Date 1997-10-27.

4.2. Verband der Elektrotechnik (VDE)

MONO-SHAPE Mark I IDC connectors are certified by VDE in Certificate 40044132 and Certificate 40045434.

Downloaded from Arrow.com.

5. TOOLING

5.1. HHM

The HHM is a modular designed fully automatic IDC – IDC and/or IDC – Crimp harness maker. See Figure 14.

A base machine, the wire handling module, provides all wires in the required lengths and configuration. It performs the wire related processing steps, e.g. wire storage, wire feeding, cutting, fixing, transfer and positioning into the IDC connectors. This common base machine is equipped with one product specific interchangeable IDC module. A lead making (crimp) module is available as an option.

The IDC module performs all connector handling steps, e.g. connector feeding and separating, coding cutting, connector transfer, wire insertion into the IDC slots by using mass termination and cover closing. Because one IDC module is designed solely for one product system, the HHM can only produce harnesses with one connector type at the same time. However, additional IDC modules can be adapted upon customer request so different IDC modules can be used with the base machine and the production can be switched over to another product family by only exchanging the IDC module.

IDC modules are available for the TE RAST connector systems AMP DUOPLUG 2.5, AMP DUOPLUG 2.5 Mark II and AMP DUOPLUG Power, AMP Multifitting Mark II and AMP MONO-SHAPE.

The lead maker (crimp) module provides the crimped leads and performs the crimp related steps, e.g. wire storage, wire feeding, cutting, stripping and the crimping step itself. When the crimp module is available, the wire transfer of the base machine records also the crimped leads in its comb and provides the wire ends for termination into the IDC module. The crimp unit was defined as an option so it can be renounced when no crimp applications is needed. In this case the HHM can do IDC – IDC and IDC – loose wire ends only.

Various checking.



Figure 14

Downloaded from Arrow.com.

5.2. I.H.M. Mark III

The new IHM Mark III is a very high performance, fully-automatic machine to manufacture parallel jumper harnesses using IDC technology. The simultaneous feeding of up to 21 wires guarantees high productivity and flexibility and a choice of 5.0 mm pitch IDC systems. The gripper unit on the left side of the machine is able to spread the wires in both directions to enable the production of harnesses. Available options are a stripper crimper unit with an integrated crimp force analyzer and a good/bad sorting unit. Quality checks integrated in the manufacturing process guarantee the highest quality harness for every production run. Other types of automated tools and hand tools are available; contact a sales representative for details. See Figure 15.



Figure 15

Downloaded from Arrow.com.

5.3. Hand Tool Kit for AMP MONO-SHAPE* Mark I (1-1579012-4)

RAST hand tools are only for sample production and repair work and not released for regular production. The customer operation manual is 744015-5. See Figure 16.





Figure 16

Downloaded from Arrow.com.