SK10226

THIS DRAWING CONTAINS INFORMATION PROPRIETARY TO POSITRONIC AND IT'S SUBSIDIARIES. POSITRONIC BELIEVES THE DATA ON THIS DRAWING TO BE RELIABLE, SINCE THE TECHNICAL INFORMATION IS GIVEN FREE OF CHARGE, THE USER EMPLOYS SUCH INFORMATION AT HIS OWN DISCRETION AND RISK. POSITRONIC ASSUMES NO RESPONSIBILITY FOR RESULTS OBTAINED OR DAMAGES INCURRED FROM USE OF SUCH INFORMATION IN WHOLE OR IN PART.

DATE	REV	REVISION RECORD	APP	DR	CK
1-19 09	NC	ECO 30497	RCW	YK	TK
3-30 10	A	ECO 32305	TK	BE	TK

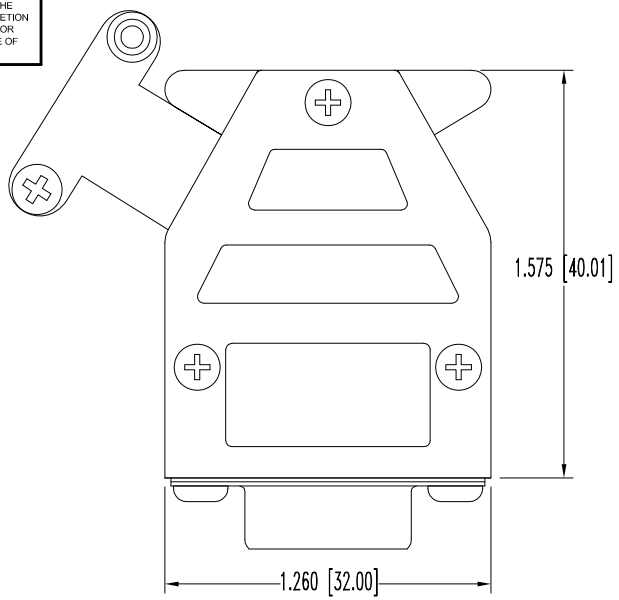

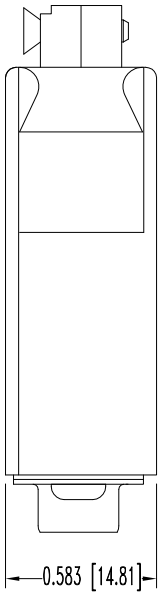

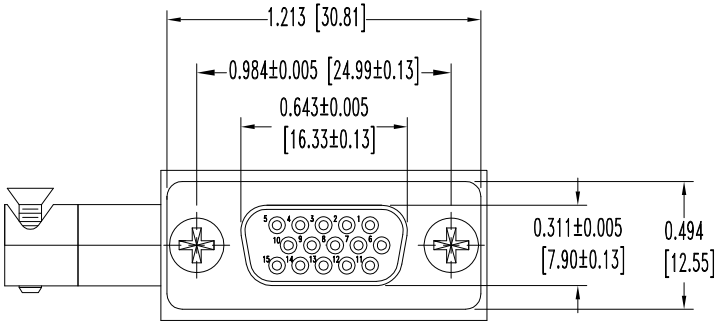

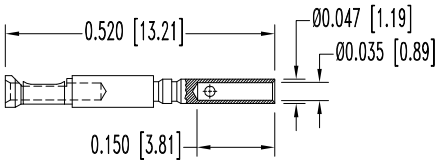

FEMALE CONTACT

15X (ENLARGED)

NOTES:

1. MATERIALS AND FINISHES:
   INSULATOR: GLASS FILLED POLYESTER PER ASTM D5927, UL 94V-0, BLUE COLOR.
   CONTACTS: BRASS, GOLD FLASH OVER NICKEL FINISH.
   SHELLS: STEEL, ZINC PLATE WITH CHROMATE SEAL.
   HOOD AND CABLE CLAMPS: ZINC, DIE CAST.
   COVER SCREWS AND CABLE CABLE CLAMP SCREWS: STEEL, NICKEL PLATE.
   MOUNTING SCREWS: STEEL, ZINC PLATE WITH CHROMATE SEAL.
2. DETAILED PRODUCT, ELECTRICAL, AND MECHANICAL INFORMATION IS AVAILABLE IN THE LATEST HIGH DENSITY D-SUBMINIATURE PRODUCT PUBLICATION. VISIT CONNECTPOSITRONIC.COM/PRODUCTS/59/HIGHDENSITYD-SUBMINIATURE OR CONNECTPOSITRONIC.COM.
3. DIMENSIONS ARE IN INCHES [MILLIMETERS].

POSITRONIC INDUSTRIES INC.
www.connectpositronic.com
FSCM 28198

DECIMAL TOL. ±0.015 [0.38]	DD SERIES	SCALE N.T.S.	DRAWN BY YK
			APPROVED BY R WILLIAMS
	TITLE DD15S10G00		
ANGULAR TOL. ±5°	DATE 1-19-09	DRAWING NUMBER SK10226	REV. A

Downloaded from Arrow.com.