0.5A SURFACE MOUNT SCHOTTKY BARRIER RECTIFIER

Features

- Low Forward Voltage Drop
- Guard Ring Construction for Transient Protection
- High Conductance
- **Totally Lead-Free & Fully RoHS Compliant (Notes 1 & 2)**
- **Halogen- and Antimony-Free. "Green" Device (Notes 3 & 4)**
- **Qualified to AEC-Q101 Standards for High-Reliability**

Mechanical Data

- Case: SOD123
- Case Material: Molded Plastic. UL Flammability Classification Rating 94V-0
- Moisture Sensitivity: Level 1 per J-STD-020
- Polarity: Cathode Band
- Lead Free Plating (Matte Tin Finish Annealed over Alloy 42 Lead-Frame). Solderable per MIL-STD-202, Method 208 e3
- Weight: 0.01 grams (Approximate)

SOD123

Top View

Ordering Information (Note 5)

Part Number	Case	Packaging
B0520LW-7-F	SOD123	3000/Tape & Reel
B0520LWQ-7-F	SOD123	3000/Tape & Reel

Notes:
1. No purposely added lead. Fully EU Directive 2002/95/EC (RoHS), 2011/65/EU (RoHS 2) & 2015/863/EU (RoHS 3) compliant.
2. See https://www.diodes.com/quality/lead-free/ for more information about Diodes Incorporated's definitions of Halogen- and Antimony-free, "Green" and Lead-free.
3. Halogen- and Antimony-free "Green" products are defined as those which contain <900ppm bromine, <900ppm chlorine (<1500ppm total Br + Cl) and <1000ppm antimony compounds.
4. Product manufactured with Date Code V9 (week 33, 2008) and newer are built with Green Molding Compound. Product manufactured prior to Date Code V9 are built with Non-Green Molding Compound and may contain Halogens or Sb_2O_3 fire retardants.
5. For packaging details, see http://www.diodes.com.

Marking Information

SD = Product Type Marking Code
YM = Date Code Marking
Y = Year (ex: F = 2018)
M = Month (ex: 9 = September)

Date Code Key

Year	1998	1999	2000	2001	2002	2003	2004	…	2018	2019	2020	2021	2022	2023	2024
Code	J	K	L	M	N	P	R	…	F	G	H	I	J	K	L

Month	Jan	Feb	Mar	Apr	May	Jun	Jul	Aug	Sep	Oct	Nov	Dec
Code	1	2	3	4	5	6	7	8	9	O	N	D

© Diodes Incorporated
Downloaded from Arrow.com.

Maximum Ratings (@ T_A = +25°C, unless otherwise specified.)

Single phase, half wave, 60Hz, resistive or inductive load.
For capacitance load, derate current by 20%.

Characteristic	Symbol	Value	Unit
Peak Repetitive Reverse Voltage Working Peak Reverse Voltage DC Blocking Voltage	V_{RRM} V_{RWM} V_R	20	V
RMS Reverse Voltage	$V_{R(RMS)}$	14	V
Average Rectified Output Current @ T_L = +90°C	I_O	0.5	A
Non-Repetitive Peak Forward Surge Current 8.3ms Single Half Sine Wave Superimposed on Rated Load	I_{FSM}	5.5	A

Thermal Characteristics

Characteristic	Symbol	Value	Unit
Power Dissipation (Note 6)	P_D	410	mW
Typical Thermal Resistance Junction to Ambient (Note 6)	$R_{\Theta JA}$	244	°C/W
Operating and Storage Temperature Range	T_J, T_{STG}	-65 to +125	°C

Electrical Characteristics (@ T_A = +25°C, unless otherwise specified.)

Characteristic	Symbol	Value	Unit	Test Conditions
Minimum Reverse Breakdown Voltage (Note 7)	$V_{(BR)R}$	20	V	I_R = 250µA
Maximum Forward Voltage Drop	V_{FM}	0.300 0.385 0.220 0.330	V	I_F = 0.1A, T_J = +25°C I_F = 0.5A, T_J = +25°C I_F = 0.1A, T_J = +100°C I_F = 0.5A, T_J = +100°C
Maximum Leakage Current (Note 8)	I_{RM}	75 250	µA	V_R = 10V, T_J = +25°C V_R = 20V, T_J = +25°C
	I_{RM}	5.0 8.0	mA	V_R = 10V, T_J = +100°C V_R = 20V, T_J = +100°C
Typical Total Capacitance	C_T	170	pF	V_R = 0V DC, f = 1MHz

Notes: 6. Device mounted on FR-4 PC board, 2"× 2", 2 oz. Copper, single sided, Cathode pad dimensions 0.75" × 1.0", Anode pad dimensions 0.25" × 1.0".
7. Pulse Test: Pulse width = 300µs, Duty Cycle ≤ 2%.
8. No purposefully added lead. Halogen and Antimony Free.

© Diodes Incorporated
Downloaded from Arrow.com.

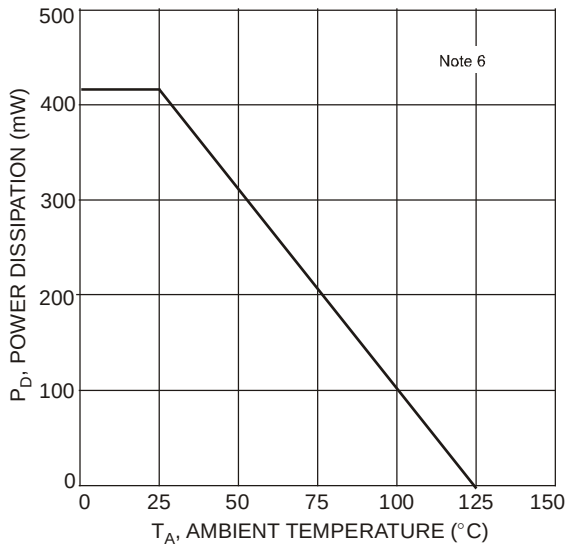

Fig. 1 Forward Power Dissipation

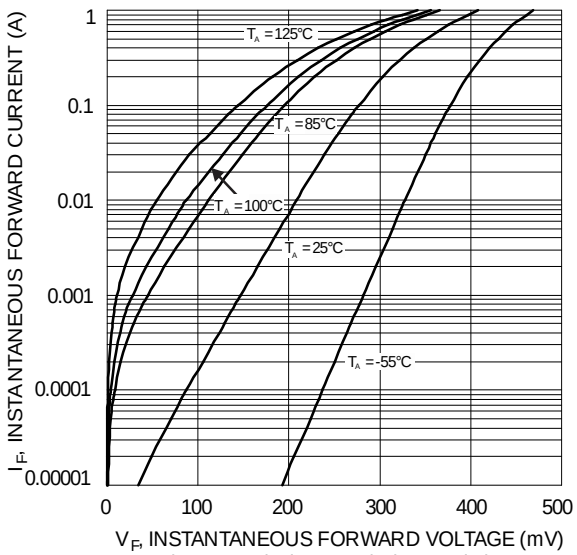

Figure 2 Typical Forward Characteristics

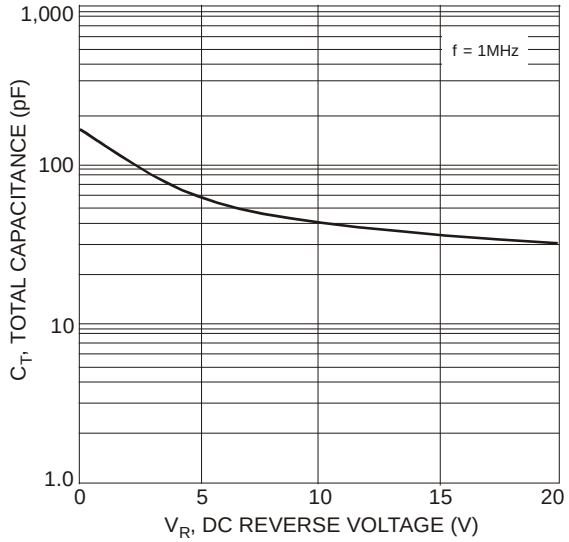

Fig. 3 Total Capacitance vs. Reverse Voltage

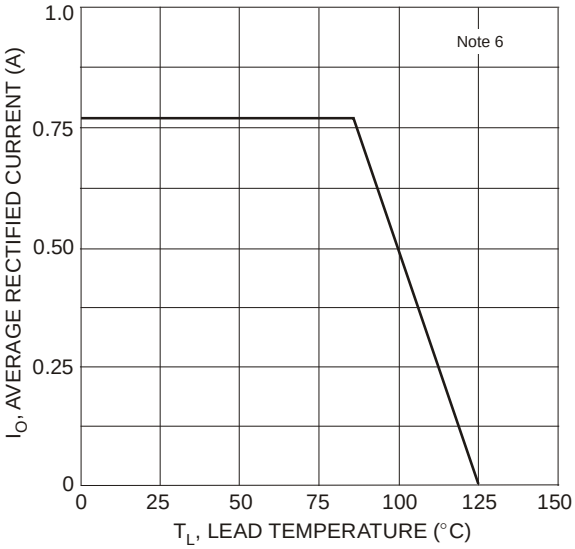

Fig. 4 Forward Current Derating Curve

© Diodes Incorporated
Downloaded from Arrow.com.

Package Outline Dimensions

Please see http://www.diodes.com/package-outlines.html for the latest version.

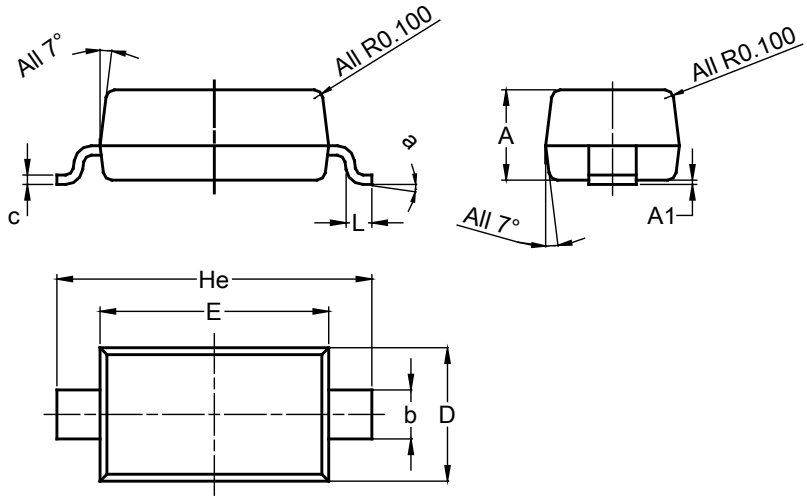

SOD123			
Dim	**Min**	**Max**	**Typ**
A	1.00	1.35	1.05
A1	0.00	0.10	0.05
b	0.52	0.62	0.57
c	0.10	0.15	0.11
D	1.40	1.70	1.55
E	2.55	2.85	2.65
He	3.55	3.85	3.65
L	0.25	0.40	0.30
a	0º	8º	--
All Dimensions in mm			

Suggested Pad Layout

Please see http://www.diodes.com/package-outlines.html for the latest version.

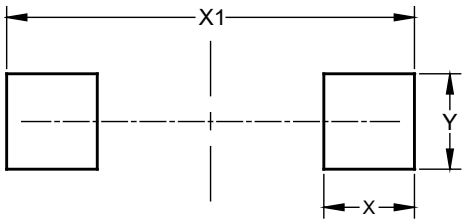

Dimensions	Value (in mm)
X	0.900
X1	4.050
Y	0.950

© Diodes Incorporated
Downloaded from Arrow.com.

IMPORTANT NOTICE

DIODES INCORPORATED MAKES NO WARRANTY OF ANY KIND, EXPRESS OR IMPLIED, WITH REGARDS TO THIS DOCUMENT, INCLUDING, BUT NOT LIMITED TO, THE IMPLIED WARRANTIES OF MERCHANTABILITY AND FITNESS FOR A PARTICULAR PURPOSE (AND THEIR EQUIVALENTS UNDER THE LAWS OF ANY JURISDICTION).

Diodes Incorporated and its subsidiaries reserve the right to make modifications, enhancements, improvements, corrections or other changes without further notice to this document and any product described herein. Diodes Incorporated does not assume any liability arising out of the application or use of this document or any product described herein; neither does Diodes Incorporated convey any license under its patent or trademark rights, nor the rights of others. Any Customer or user of this document or products described herein in such applications shall assume all risks of such use and will agree to hold Diodes Incorporated and all the companies whose products are represented on Diodes Incorporated website, harmless against all damages.

Diodes Incorporated does not warrant or accept any liability whatsoever in respect of any products purchased through unauthorized sales channel. Should Customers purchase or use Diodes Incorporated products for any unintended or unauthorized application, Customers shall indemnify and hold Diodes Incorporated and its representatives harmless against all claims, damages, expenses, and attorney fees arising out of, directly or indirectly, any claim of personal injury or death associated with such unintended or unauthorized application.

Products described herein may be covered by one or more United States, international or foreign patents pending. Product names and markings noted herein may also be covered by one or more United States, international or foreign trademarks.

This document is written in English but may be translated into multiple languages for reference. Only the English version of this document is the final and determinative format released by Diodes Incorporated.

LIFE SUPPORT

Diodes Incorporated products are specifically not authorized for use as critical components in life support devices or systems without the express written approval of the Chief Executive Officer of Diodes Incorporated. As used herein:

A. Life support devices or systems are devices or systems which:

1. are intended to implant into the body, or
2. support or sustain life and whose failure to perform when properly used in accordance with instructions for use provided in the labeling can be reasonably expected to result in significant injury to the user.

B. A critical component is any component in a life support device or system whose failure to perform can be reasonably expected to cause the failure of the life support device or to affect its safety or effectiveness.

Customers represent that they have all necessary expertise in the safety and regulatory ramifications of their life support devices or systems, and acknowledge and agree that they are solely responsible for all legal, regulatory and safety-related requirements concerning their products and any use of Diodes Incorporated products in such safety-critical, life support devices or systems, notwithstanding any devices- or systems-related information or support that may be provided by Diodes Incorporated. Further, Customers must fully indemnify Diodes Incorporated and its representatives against any damages arising out of the use of Diodes Incorporated products in such safety-critical, life support devices or systems.

Copyright © 2020, Diodes Incorporated

www.diodes.com

Downloaded from Arrow.com.