SQH CONNECTOR

Squib connectors

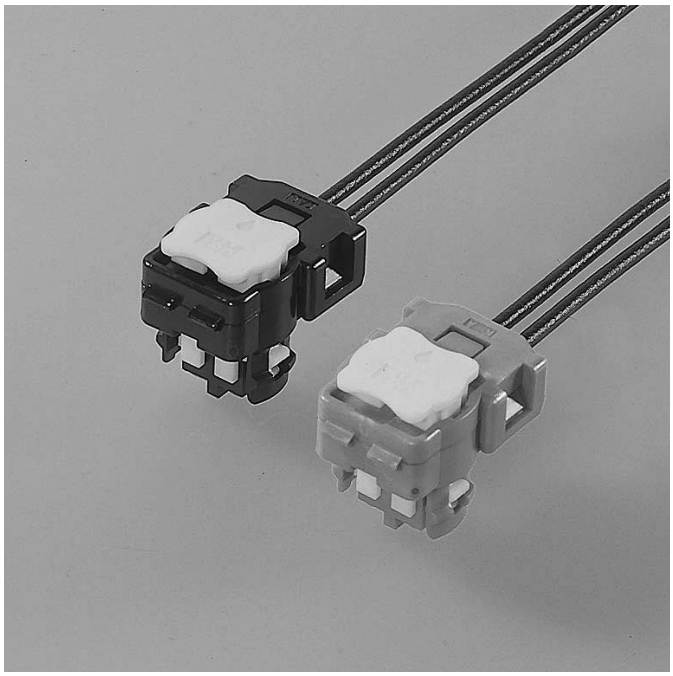

This connector for air-bag has intelligent CPA, which allows locking the connector, incomplete mating detection and release of short-circuit at the same time.

Features

●Compact design
This connector is approximately 13mm smaller than the SQS connector in total length (31.3mm→18mm).
This connector can fit in the outer diameter 25mm or less of an inflator.

●Mating
Intelligent CPA adopted. It enables the connector to be locked securely and prevents incomplete mating on the assembly line resulting in improved connector retention force.

●Terminal construction
It is designed to prevent the deformation of the contact part when processing wire harness by protecting the contact part of each terminal with a box.

●Scooping (kojiri) preventive construction
Using a shunt ring with a countermeasure for scooping (kojiri), the resistance to scooping (kojiri) insertion and withdrawal is improved.

●Noise suppression
Ferrite core provides simple and reliable noise suppression characteristics.

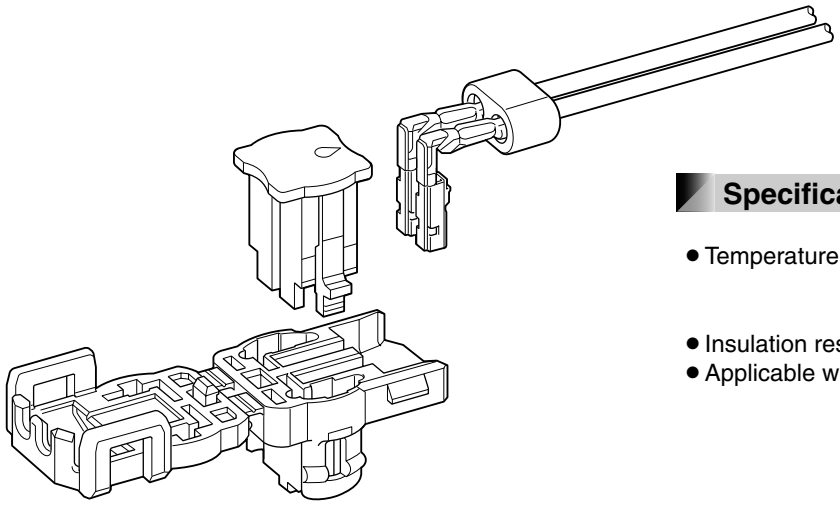

Specifications

- Temperature range: -30°C to +80°C
  (including temperature rise in applying electrical current)
- Insulation resistance: 100 MΩ min.
- Applicable wire: 0.3 mm^2 to 0.5 mm^2

∗ Compliant with ELV/RoHS.
∗ Contact JST for details.

Downloaded from Arrow.com.

Female terminal

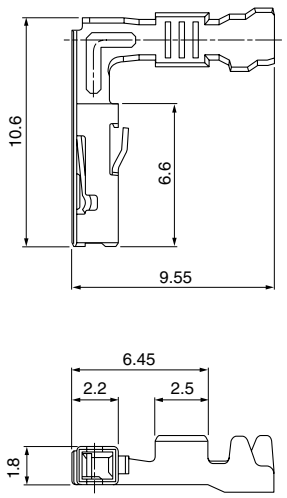

Model No.	Applicable wire range		Q ty/reel
	Conductor (mm^2)	Insulation O.D. (mm)	
SQS-A03GF-P-P	0.3 to 0.5	1.0 to 1.6	6,500
SQS-A03GI-P-P	0.3 to 0.5	1.0 to 1.6	6,500

Material and Finish
GF: Copper alloy, nickel-undercoated, Contact area; gold-plated (0.4 μm min.) GI: Copper alloy, nickel-undercoated, Contact area; gold-plated (0.8 μm min.)

Female housing

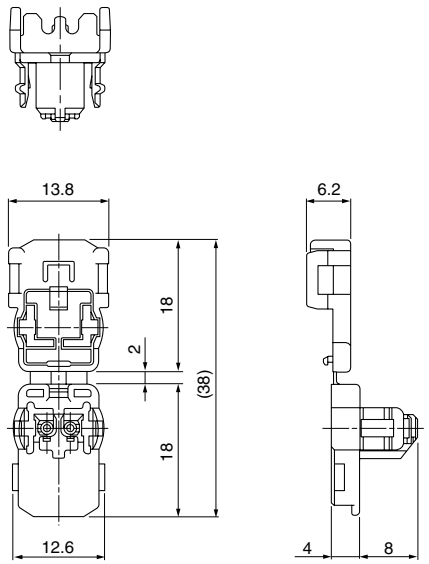

● **Keying figure**

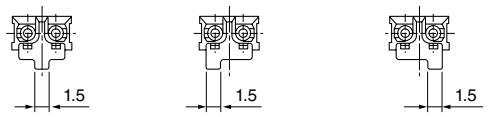

A code (black) **B code (green)** **C code (orange)**

Circuits	Model No.	Key figure	Q ty/box	Color
2	**SQHR-02H-1A-K**	A code	1,500	Black
	SQHR-02H-1B-M	B code	1,500	Green
	SQHR-02H-1C-D	C code	1,500	Orange

Material
PBT

Downloaded from Arrow.com.

CPA housing

• SQSC-02H-1A-Y

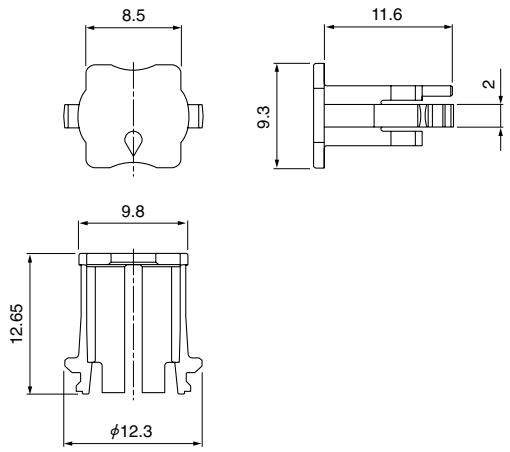

• SQSC-02H-2A-Y

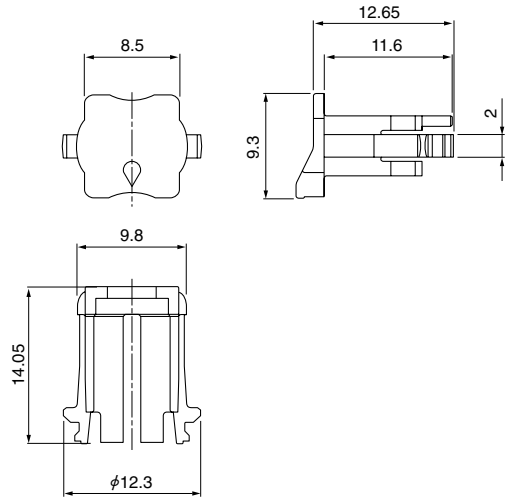

Circuits	Model No.	Q ty/box	Color
2	**SQSC-02H-1A-Y**	2,000	Yellow
	SQSC-02H-2A-Y	2,000	Yellow

Material
Glass-filled PBT

Ferrite

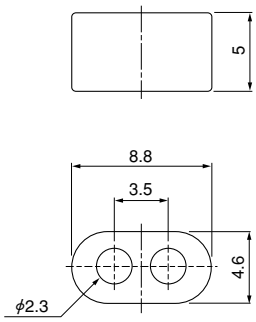

Circuits	Model No.	Q ty/box
2	**SQMF-02-1A**	3,000

Crimping machine, Applicator

Strip terminal	Crimping machine	Crimp applicator MKS-L	
		Dies	Crimp applicator with dies
SQS-A03GF-P-P	AP-K2N	MK/SQS-A03-P	APLMK SQS-A03-P
SQS-A03GI-P-P			

Note: When crimping operation is conducted using an applicator and die set other than the above, JST cannot guarantee the performance of the terminal.

Downloaded from Arrow.com.