Programmable Precision Regulator

Features

- The Reference Input Voltage Tolerance is 0.5%
- Sink Current Capability of 1mA to 100 mA
- Programmable Output Voltage 36V
- Low Output Noise Voltage and Fast Turn On Response
- The Typical Value of the Equivalent Temperature Factor in the Whole Temperature Scope is 50 ppm/℃
- Moisture Sensitivity Level 3
- Epoxy Meets UL 94 V-0 Flammability Rating
- Halogen Free. “Green” Device (Note 1)
- Lead Free Finish/RoHS Compliant ("P" Suffix designates RoHS Compliant. See ordering information)

Maximum Ratings

Parameter	Symbol	Value	Unit
Cathode Voltage	V_{KA}	40	V
Cathode Current Range	I_K	-100~150	mA
Reference Input Current Range	I_{REF}	0.05~10	mA
Power Dissipation at 25 ℃	P_D	0.3	W
Thermal Resistance Junction to Ambient	$R_{\theta JA}$	400	℃/W
Operating Temperature	T_{opr}	-40~125	℃
Storage Temperature Range	T_{STG}	-65~150	℃

Recommended Operating Conditions

Parameter	Symbol	Min	Max	Unit
Cathode Voltage	V_{KA}	V_{REF}	36	V
Cathode Current Range	I_K	1.0	100	mA

Note: 1. Halogen free "Green” products are defined as those which contain <900ppm bromine, <900ppm chlorine (<1500ppm total Br + Cl) and <1000ppm antimony compounds.

Internal Structure and Marking Code

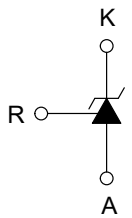

1. (R) REFERENCE
2. (K) CATHODE
3. (A) ANODE

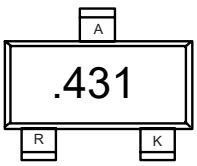

SOT-23

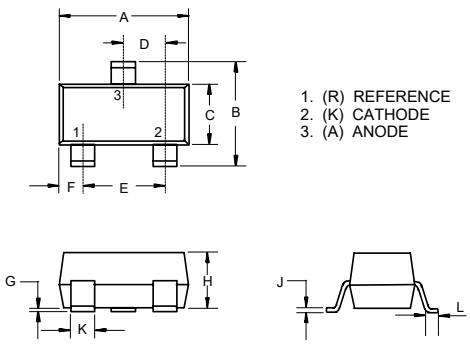

1. (R) REFERENCE
2. (K) CATHODE
3. (A) ANODE

DIMENSIONS					
DIM	INCHES		MM		NOTE
	MIN	MAX	MIN	MAX	
A	0.110	0.120	2.80	3.04	
B	0.083	0.104	2.10	2.64	
C	0.047	0.055	1.20	1.40	
D	0.034	0.041	0.85	1.05	
E	0.067	0.083	1.70	2.10	
F	0.018	0.024	0.45	0.60	
G	0.0004	0.006	0.01	0.15	
H	0.035	0.043	0.90	1.10	
J	0.003	0.007	0.08	0.18	
K	0.012	0.020	0.30	0.51	
L	0.007	0.020	0.20	0.50	

Suggested Solder Pad Layout

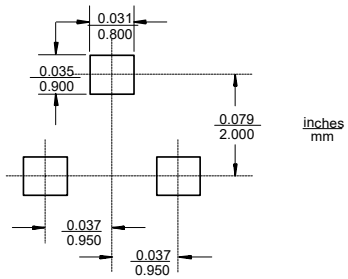

Downloaded from Arrow.com.

Electrical Characteristics (V_{KA}=V_{REF}, I_K=10mA, T_A=25°C, Unless Otherwise Specified)

Parameter	Symbol	Test Conditions	Min	Typ	Max	Unit
Reference output Voltage	V_{REF}	V_{KA}=V_{REF}, I_{KA}=10mA	2.483	2.495	2.507	V
Deviation of Reference Input Voltage	$\triangle V_{REF}$ / $\triangle T$	V_{KA}=V_{REF}, I_{KA}=10mA -40°C≤T_A≤125°C		4.5	8	mV
Ratio of Change in Reference Input Voltage to the Change in Cathode Voltage	$\triangle V_{REF}$ / $\triangle V_{KA}$	$\triangle V_{KA}$=10V~V_{REF}, I_{KA}=10mA	-4.0	0	2.7	mV
		$\triangle V_{KA}$=36V~10V, I_{KA}=10mA	-0.4	0	2.0	mV
Reference Input Current	I_{ref}	I_{KA}=10mA, R_1=10KΩ , R_2=∞		1.8	4.0	μA
Deviation of Reference Input Current Over Full Temperature Range	$\triangle I_{REF}$ / $\triangle T$	I_{KA}=10mA, R_1=10KΩ , R_2=∞ -40°C≤T_A≤125°C		0.4	1.2	μA
Minimum Cathode Current for Regulation	$I_{KA(min)}$	V_{KA}=V_{REF}		0.25	0.5	mA
Off-State Cathode Current	$I_{KA(off)}$	V_{KA}=40V, V_{REF}=0V		0.2	0.9	μA
Dynamic Impedance	Z_{KA}	V_{KA}=V_{REF}, I_{KA}=1 to 100mA, f≤1.0KHz		0.27	0.5	Ω

Downloaded from Arrow.com.

Figure 1. Test Circuit for $V_{KA} = V_{ref}$

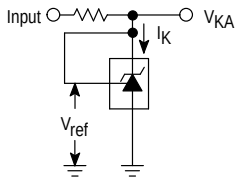

Figure 2. Test Circuit for $V_{KA} > V_{ref}$

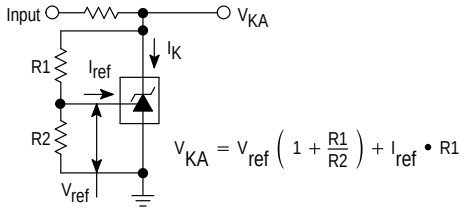

Figure 3. Test Circuit for I_{off}

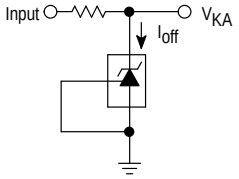

APPICATION INFORMATION

1. Shunt Regulator

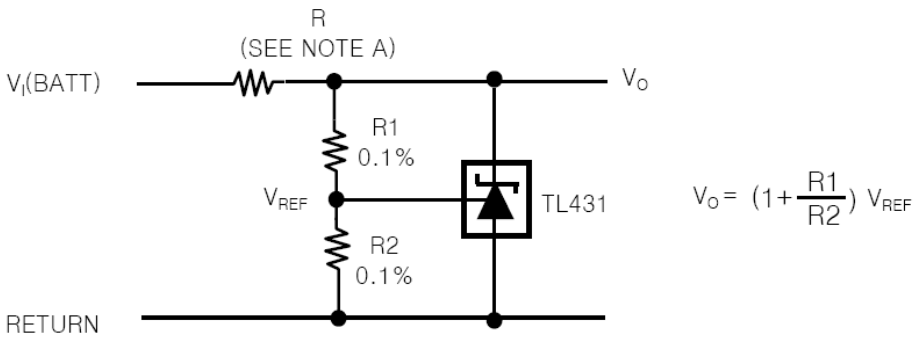

Note A : R Should provide cathode current 1mA to the TL431 at minimum $V_{I(BATT)}$

2. Output Control of a Three-Terminal Fixed Regulator

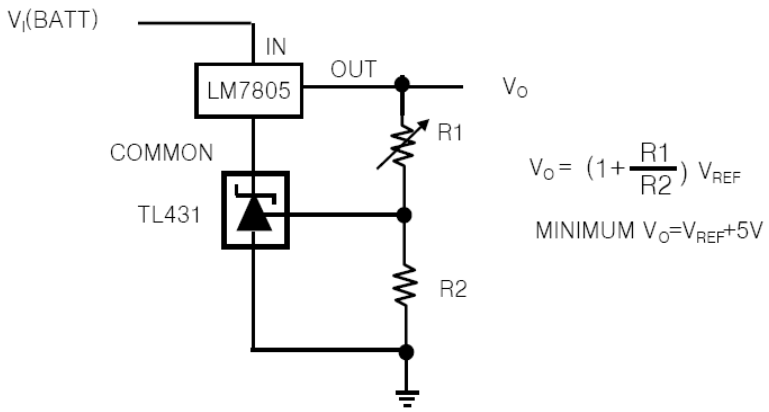

Downloaded from Arrow.com.

3. High-Current Shunt Regulator

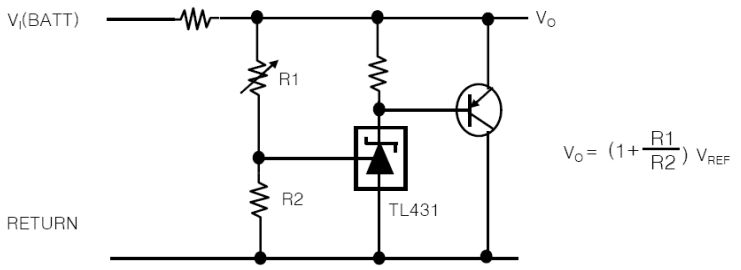

NOTE A : R_B Should provide cathode current≥1mA to the TL431.

4. Efficient 5-V Precision Regulator

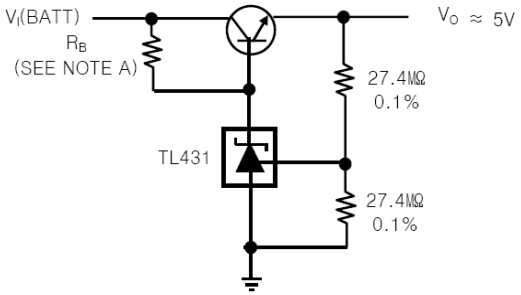

5. Precision Current Limiter

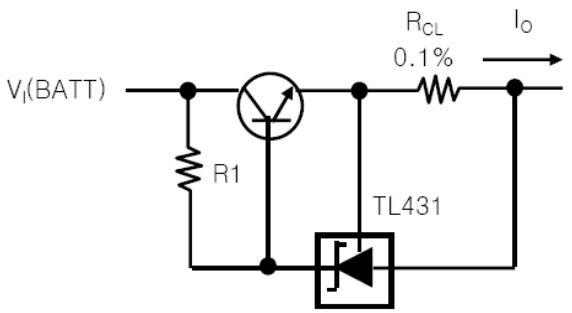

$$I_{OUT} = \frac{V_{REF}}{R_{CL}} + I_{KA}$$

$$R1 = \frac{V_{I(BATT)}}{\frac{I_O}{H_{FE}}} + I_{KA}$$

6. Precision Constant-Current Sink

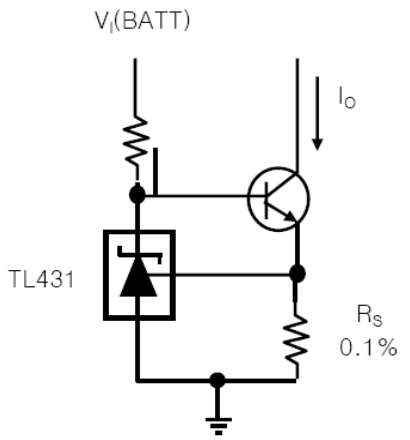

$$I_O = \frac{V_{REF}}{R_S}$$

Downloaded from Arrow.com.

Curve Characteristics

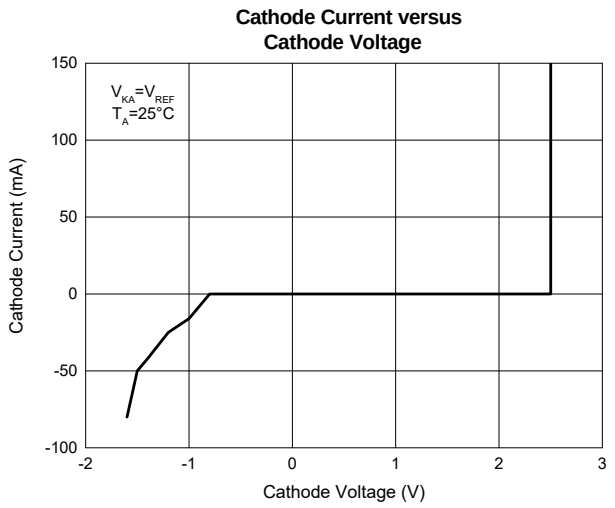

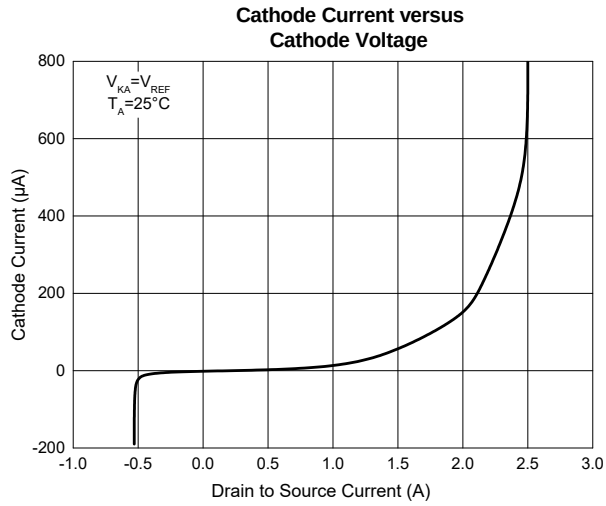

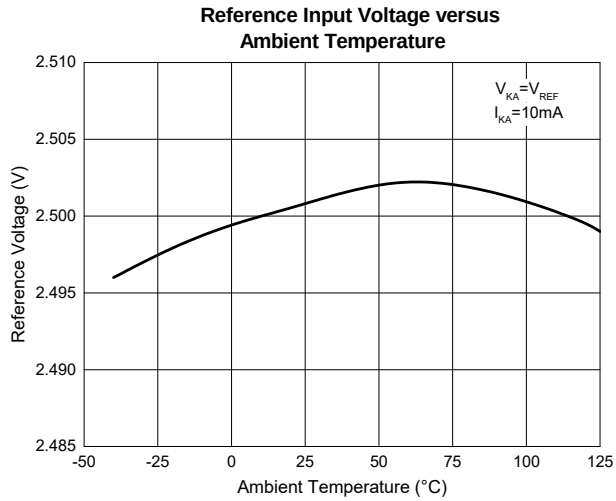

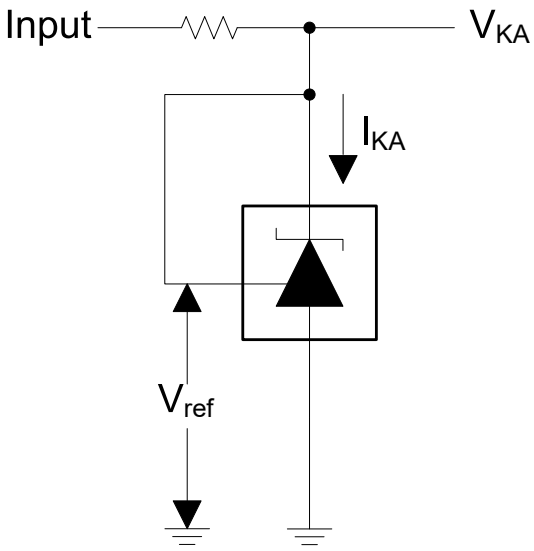

Test Circuit for $V_{KA}=V_{ref}$

Downloaded from Arrow.com.

Curve Characteristics

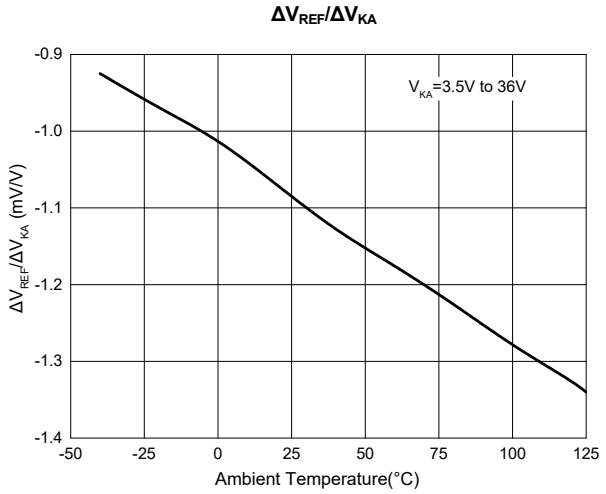

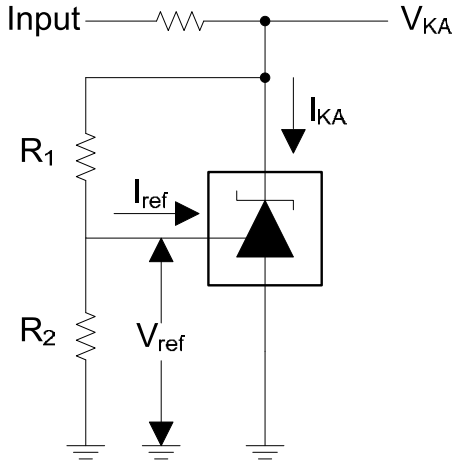

Test Circuit for $V_{KA}=V_{ref}(1+R1/R2)+R1*I_{ref}$

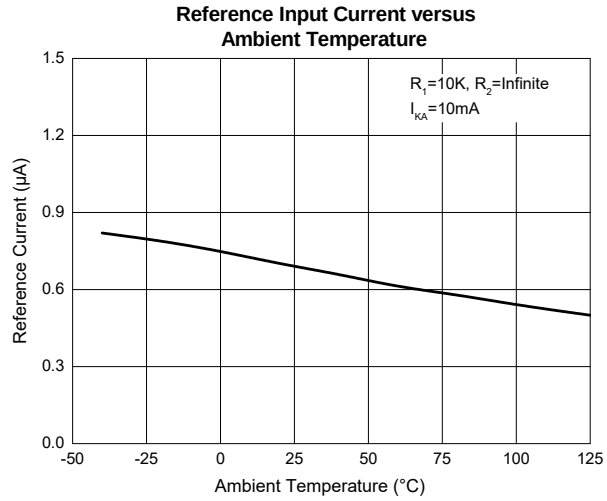

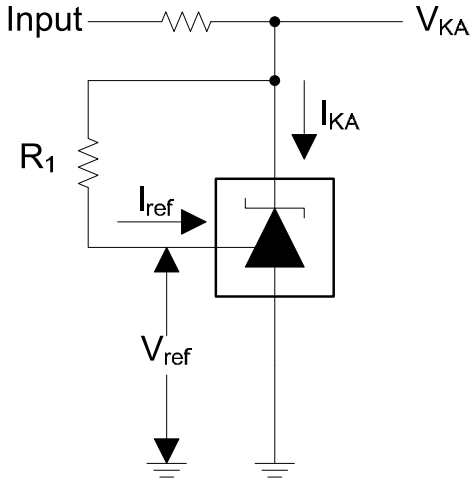

Test Circuit for I_{ref}

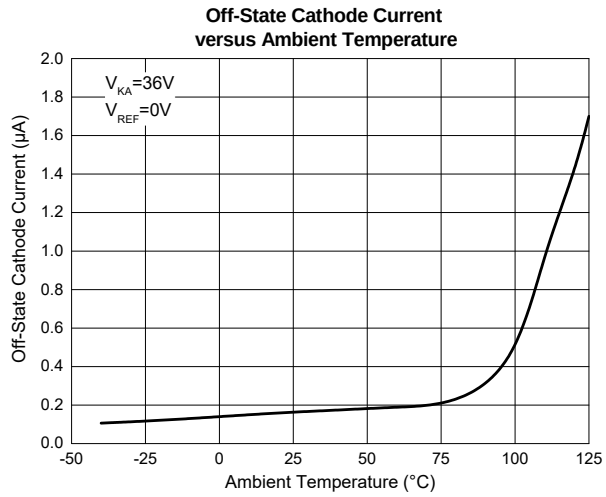

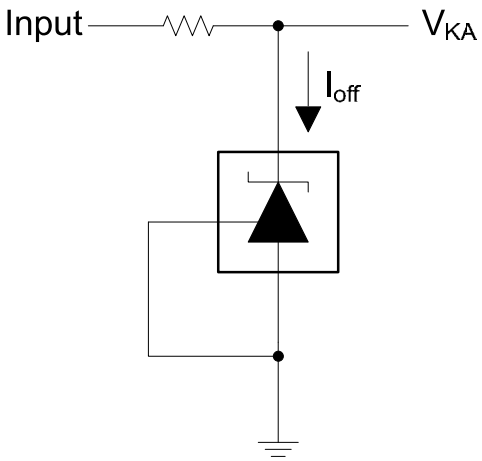

Test Circuit for I_{off}

Downloaded from Arrow.com.

Ordering Information

Device	Packing
Part Number-TP	Tape&Reel: 3Kpcs/Reel

*****IMPORTANT NOTICE*****

Micro Commercial Components Corp. reserves the right to make changes without further notice to any product herein to make corrections, modifications , enhancements , improvements , or other changes . ***Micro Commercial Components Corp*** . does not assume any liability arising out of the application or use of any product described herein; neither does it convey any license under its patent rights ,nor the rights of others . The user of products in such applications shall assume all risks of such use and will agree to hold ***Micro Commercial Components Corp*** . and all the companies whose products are represented on our website, harmless against all damages. ***Micro Commercial Components Corp***. products are sold subject to the general terms and conditions of commercial sale, as published at
https://www.mccsemi.com/Home/TermsAndConditions.

*****LIFE SUPPORT*****

MCC's products are not authorized for use as critical components in life support devices or systems without the express written approval of Micro Commercial Components Corporation.

*****CUSTOMER AWARENESS*****

Counterfeiting of semiconductor parts is a growing problem in the industry. Micro Commercial Components (MCC) is taking strong measures to protect ourselves and our customers from the proliferation of counterfeit parts. MCC strongly encourages customers to purchase MCC parts either directly from MCC or from Authorized MCC Distributors who are listed by country on our web page cited below. Products customers buy either from MCC directly or from Authorized MCC Distributors are genuine parts, have full traceability, meet MCC's quality standards for handling and storage. **MCC will not provide any warranty coverage or other assistance for parts bought from Unauthorized Sources**. MCC is committed to combat this global problem and encourage our customers to do their part in stopping this practice by buying direct or from authorized distributors.

Downloaded from Arrow.com.