finder
RELAYING INNOVATION

7S
SERIES

Modular relays with forcibly guided contacts 6 - 10 A

- Chemical and petrolchemical
- Hoists and cranes
- Wood-processing machines
- Carousel warehouses
- Escalators
- Elevators and lifts
- Process Industry
- Automatic car-washes

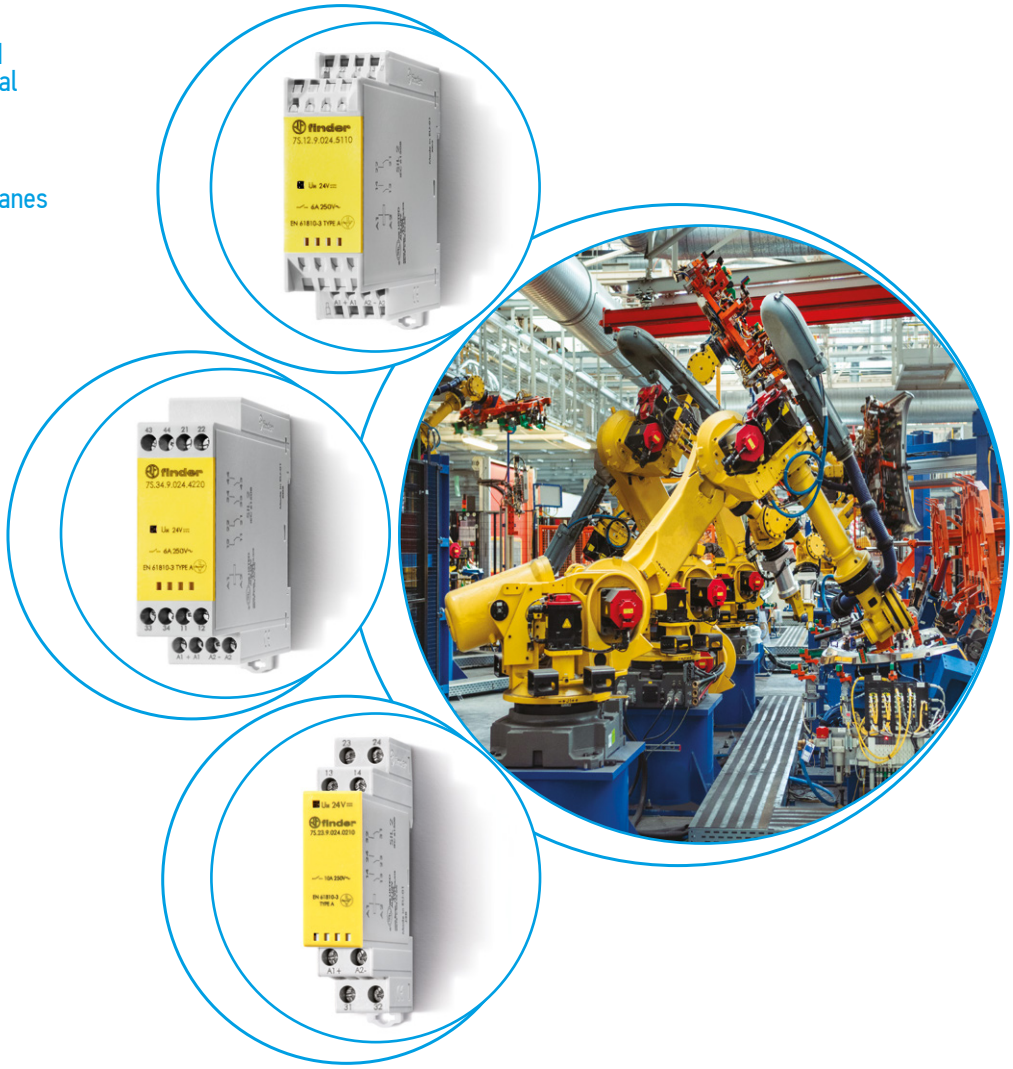

Downloaded from Arrow.com.

Prices, features, specifications, capabilities, appearance and availability of our products and services are subject to change without notice.
FINDER assumes no responsibility for the presence of possible errors or insufficient information in this document.
In case of discrepancies between the printed and online versions, the latter prevails.

Downloaded from Arrow.com.

Modular relays with forcibly guided contacts

Type 7S.12/32
- 2 pole 6 A (1 NO + 1 NC)

Type 7S.14/34
- 4 pole 6 A (2 NO + 2 NC and 3 NO + 1 NC)

Type 7S.16/36
- 6 pole 6 A (4 NO + 2 NC and 5 NO + 1 NC)

- For safety applications, with class A forcibly guided contact relays EN 61810-3 (previously EN 50205)
- SIL2 evaluated according to EN 61508, for use in functional safety application according to EN 62061 up to SIL2 and according to IEC 13849-1 up to PL d (instead of For functional reliability in machinery and plant engineering according to EN 13849-1)
- For functional reliability in machinery and plant engineering according to EN 13849-1
- Railways application versions available
- DC and AC supply versions
- Coil status visual indication with LED
- 35 mm rail (EN 60715) mount

7S.12/7S.14/7S.16
Screwless terminal

7S.32/7S.34/7S.36
Box clamp

For outline drawing see page 12

	7S.12/32…5110	7S.14/34…4xx0	7S.16/36…5xx0
	• 2 pole (1 NO + 1 NC)	• 4 pole : (2 NO + 2 NC) type 7S.xx.x.xxx.4220 (3 NO + 1 NC) type 7S.xx.x.xxx.4310	• 6 pole: (4 NO + 2 NC) type 7S.xx.x.xxx.5420 (5 NO + 1 NC) type 7S.xx.x.xxx.5510
Contact specification			
Contact configuration	1 NO + 1 NC	2 NO + 2 NC, 3 NO + 1 NC	4 NO + 2 NC, 5 NO + 1 NC
Rated current/Max. peak current A	6/15	6/15	6/15
Rated switching voltage V AC (50/60 Hz)	250	250	250
Rated load AC1 VA	1500	1500	1500
Rated current AC15 (230 V AC) A	5	5	5
Rated current AC15 (400 V AC) A	2	—	—
Breaking capacity DC1: 24/110/220 V A	6/0.6/0.2	6/0.9/0.3	6/0.9/0.3
Breaking capacity DC13: 24 V A	1	3	3
Minimum switching load mW (V/mA)	60 (5/5)	60 (5/10)	60 (5/10)
Standard contact material	AgNi + Au	$AgSnO_2$	$AgSnO_2$ + Au
Coil specification			
Nominal voltage (U_N) V AC (50/60 Hz)	110…125 - 230…240	110…125 - 230…240	110…125 - 230…240
V DC	12 - 24	12 - 24 - 110	12 - 24 - 110
Rated power VA (50 Hz)/W	2.3/1	2.3/1	2.3/1
Operating range AC	(0.85…1.1)U_N	(0.85…1.1)U_N	(0.85…1.1)U_N
DC	(0.8…1.2)U_N	(0.8…1.2)U_N	(0.8…1.2)U_N
DC (24 and 110 V only)	(0.7…1.25)U_N	(0.7…1.25)U_N	(0.7…1.25)U_N
Holding voltage AC/DC	0.45 U_N / 0.45 U_N	0.55 U_N / 0.55 U_N	0.55 U_N / 0.55 U_N
Must drop-out voltage AC/DC	0.1 U_N / 0.1 U_N	0.1 U_N / 0.1 U_N	0.1 U_N / 0.1 U_N
Technical data			
Mechanical life cycles	$10 \cdot 10^6$	$10 \cdot 10^6$	$10 \cdot 10^6$
Electrical life at rated load AC1 cycles	$100 \cdot 10^3$	$100 \cdot 10^3$	$100 \cdot 10^3$
Operate/release time ms	7/11	12/10	12/10
Insulation between coil and contacts (1.2/50 µs) kV	6	6	6
Dielectric strength between open contacts V AC	1500	1500	1500
Ambient temperature °C	–40…+70	–40…+70	–40…+70
Protection category	IP 20	IP 20	IP 20
Approvals (according to type)	CE UK CA EAC SIL2 cULus		

C

Downloaded from Arrow.com.

Modular relays with forcibly guided contacts

Type 7S.23
- 3 pole (2 NO + 1 NC)

- For safety applications, with class A forcibly guided contact relays EN 61810-3 (previously EN 50205)
- SIL2 evaluated according to EN 61508, for use in functional safety application according to EN 62061 up to SIL2 and according to IEC 13849-1 up to PL d (instead of For functional reliability in machinery and plant engineering according to EN 13849-1)
- For functional reliability in machinery and plant engineering according to EN 13849-1
- DC coil
- Cadmium free contacts
- 17.5 mm wide
- Coil status visual indication with LED
- 35 mm rail (EN 60715) mount

C

7S.23
Box clamp

7S.23

- 3 pole (2 NO + 1 NC)

For outline drawing see page 12

Contact specification		
Contact configuration		2 NO + 1 NC
Rated current/Max. peak current	A	10/20
Rated switching voltage	V AC (50/60 Hz)	250
Rated load AC1	VA	2500
Rated current AC15 (230 V AC)	A	5
Breaking capacity DC1: 24/110/220 V	A	10/0.6/0.3
Breaking capacity DC13: 24 V	A	5
Minimum switching load	mW (V/mA)	60 (5/5)
Standard contact material		AgNi + Au
Coil specification		
Nominal voltage (U_N)	V DC	12 - 24 - 48 -110
Rated power	W	1
Operating range	DC	$(0.8\ldots1.2)U_N$
Holding voltage	DC	0.45 U_N
Must drop-out voltage	DC	0.1 U_N
Technical data		
Mechanical life	cycles	$10 \cdot 10^6$
Electrical life at rated load AC1	cycles	$100 \cdot 10^3$
Operate/release time	ms	7/11
Insulation between coil and contacts (1.2/50 µs)	kV	6
Dielectric strength between open contacts	V AC	1500
Ambient temperature	°C	–40…+70
Protection category		IP 20
Approvals (according to type)		CE UKCA EAC SIL2 cULus

XII-2025, www.findernet.com

Downloaded from Arrow.com.

Modular relays with forcibly guided contacts for SIL3 safety applications

Type 7S.43/63
- 2 NO safety contacts
- 1 NC feedback contact
- 1 auxiliary signalling contact

- For safety application, with class A forcibly guided contact relays EN 61810-3 (previously EN 50205) for safety application up to SIL 3
- SIL 3 evaluated according to EN 61508, for use in functional safety application according to EN 62061 up to SIL 3 and according to IEC 13849-1 up to PL e
- Double channel architecture (1oo2) with 2 NO contact, 1 feedback contact and 1 auxiliary contact
- From 12 up to 110 V DC version with operating range (0.85…1.1)U_N
- DC coil
- Coil status visual indication with LED
- 35 mm rail (EN 60715) mount

7S.43/63…0211

- 3 pole (2 NO + 1 NC)
- 1 auxliary contact

7S.43
Screwless terminal

7S.63
Box clamp

For outline drawing see page 12

Contact specification		
Contact configuration		2 NO + 1 NC + 1 AUX
Rated current/Max. peak current	A	6/15
Rated switching voltage	V AC (50/60 Hz)	250
Rated load AC1	VA	1500
Rated current AC15 (230 V AC)	A	5
Breaking capacity DC1: 24/110/220 V	A	6/0.6/0.2
Breaking capacity DC13: 24 V	A	3
Minimum switching load	mW (V/mA)	60 (5/10)
Standard contact material		$AgSnO_2$ & AgNi + Au
Coil specification		
Nominal voltage (U_N)	V DC	12 - 24 - 48 -110
Rated power	W	1.7
Operating range	DC	(0.85…1.1)U_N
Holding voltage	DC	0.55 U_N
Must drop-out voltage	DC	0.1 U_N
Technical data		
Mechanical life	cycles	$10 \cdot 10^6$
Electrical life at rated load AC1	cycles	$100 \cdot 10^3$
Operate/release time of NO contacts	ms	10/7
Operate/release time of NC contacts	ms	5/30
Insulation between coil and contacts (1.2/50 µs)	kV	6
Dielectric strength between open contacts	V AC	1500
Ambient temperature	°C	–40…+70
Protection category		IP 20
Approvals (according to type)		CE UKCA EAC SIL3 cULus

XII-2025, www.findernet.com

Downloaded from Arrow.com.

Ordering information

Example: 7S series Modular relay with forcibly guided contacts, 6 contact (4 NO + 2 NC) 6 A, supply voltage 24 V DC.

7 S . 1 6 . 9 . 0 2 4 . 5 4 2 0 [ ]

Series

Type
1 = 22.5 mm wide, screwless terminals
2 = 17.5 mm wide, Box clamp
3 = 22.5 mm wide, Box clamp
4 = 22.5 mm wide, screwless terminals
6 = 22.5 mm wide, Box clamp

Output
2 = 2 contacts
3 = 3 contacts
4 = 4 contacts
6 = 6 contacts

Supply version
8 = AC (50 /60 Hz)
9 = DC

Supply voltage
See page 10

Contact material
0 = AgNi +Au (7S.23) only
0 = $AgSnO_2$ & AgNi + Au (7S.43/63) only
4 = $AgSnO_2$ (7S.14/34) only
5 = AgNi +Au (7S.12/32) only
5 = $AgSnO_2$ + Au (7S.16/36) only

NO and NC contatcs
11 = 1 NO + 1 NC (SPST-NO + SPST-NC)
21 = 2 NO + 1 NC (DPST-NO+SPST-NC)
22 = 2 NO + 2 NC (DPST-NO + DPST-NC)
31 = 3 NO + 1 NC (3PST-NO + SPST-NC)
42 = 4 NO + 2 NC (4PST-NO + DPST-NC)
51 = 5 NO + 1 NC (4PST-NO + SPST-NC)

Special versions
0 = Standard
1 = NO auxliary contact

T= Railways application version

Codes, Preferred selections for best availability are shown in **bold.**

7S.12.9.012.5110	7S.14.9.012.4220	7S.16.9.012.5420
7S.12.9.024.5110	7S.14.9.012.4310	**7S.16.9.024.5420**
7S.12.8.120.5110	**7S.14.9.024.4220**	**7S.16.9.024.5510**
7S.12.8.230.5110	**7S.14.9.024.4310**	7S.16.9.110.5420
	7S.14.9.110.4220	7S.16.8.120.5420
7S.32.9.012.5110	7S.14.9.110.4310	7S.16.8.230.5420
7S.32.9.024.5110	7S.14.8.120.4220	
7S.32.8.120.5110	7S.14.8.120.4310	7S.36.9.012.5420
7S.32.8.230.5110	7S.14.8.230.4220	**7S.36.9.024.5420**
	7S.14.8.230.4310	**7S.36.9.024.5510**
7S.43.9.012.0211		7S.36.9.110.5420
7S.43.9.024.0211	7S.34.9.012.4220	7S.36.8.120.5420
7S.43.9.048.0211	7S.34.9.012.4310	7S.36.8.230.5420
7S.43.9.110.0211	**7S.34.9.024.4220**	
	7S.34.9.024.4310	7S.23.9.012.0210
7S.63.9.012.0211	7S.34.9.110.4220	**7S.23.9.024.0210**
7S.63.9.024.0211	7S.34.9.110.4310	7S.23.9.048.0210
7S.63.9.048.0211	7S.34.8.120.4220	7S.23.9.110.0210
7S.63.9.110.0211	7S.34.8.120.4310	
	7S.34.8.230.4220	
	7S.34.8.230.4310	

Downloaded from Arrow.com.

Technical data

Insulation according to EN 61810-1		
Nominal voltage of supply system	V AC	230/400
Rated insulation voltage	V AC	250
Pollution degree		2
Insulation between coil and contact set		
Type of Insulation		Reinforced
Overvoltage category		III
Rated impulse voltage	kV (1.2/50 µs)	6
Dielectric strength	V AC	4000
Insulation between adjacent contacts		
Type of Insulation		Basic
Overvoltage category		III
Rated impulse voltage	kV (1.2/50 µs)	4
Dielectric strength	V AC	2500
Insulation between open contacts		
Type of disconnection		Micro-disconnection
Dielectric strength	V AC/kV (1.2/50 µs)	1500/2.5

Insulation between coil terminals					
Rated impulse voltage (according to EN 61180)		kV (1.2/50 µs)	1.5		
Terminals			**Box clamp**		**Screwless Terminal**	
Min. wire size			solid cable	stranded cable	solid cable	stranded cable
		mm²	0.5	0.5	0.5	0.5
		AWG	21	21	21	21
			Box clamp		**Screwless Terminal**	
Max. wire size			solid cable	stranded cable	solid cable	stranded cable
		mm²	1 x 6 / 2 x 2.5	1 x 4 / 2 x 2.5	1 x 1.5	1 x 1.5
		AWG	1 x 10 / 2 x 14	1 x 12 / 2 x 14	1 x 14	1 x 16
Wire strip length		mm	9			
Screw torque		Nm	0.8			

Other data			**7S.12/32**	**7S.14/34**	**7S.16/36**	**7S.23**	**7S.43/63**
Bounce time: NO/NC		ms	2/8	2/10	2/10	2/15	1/8
Vibration resistance (10…200)Hz: NO/NC		g	10/5	20/6	20/6	10/2	10/2
Shock resistance: NO/NC		g	20/6	20/5	20/5	20/6	20/5
Power lost to the environment	without contact current	W	0.8	0.8	0.8	0.8	1.7
	with rated current	W	1.4	2.3	2.8	1.4	3.8

Downloaded from Arrow.com.

Contact specifications

Contact diagrams

7S.12/7S.32

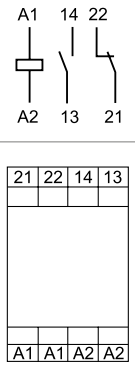

7S.14/34...4220

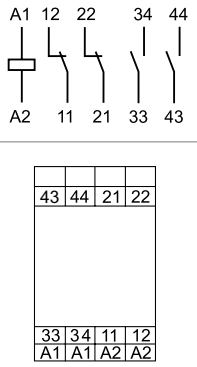

7S.14...4310

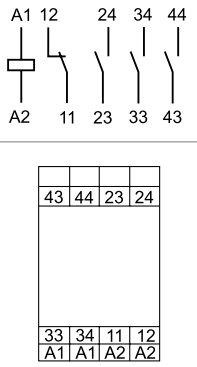

7S.16/36...5420

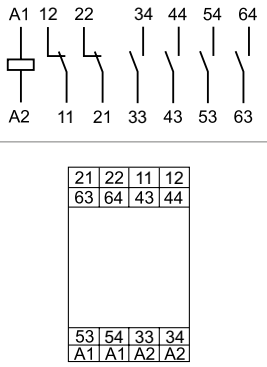

7S.16/36...5510

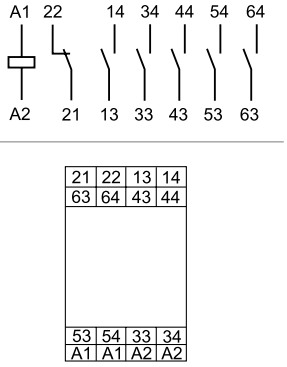

7S.23

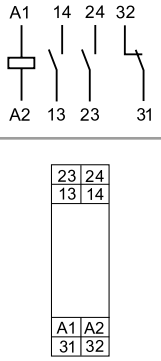

7S.43/7S.63

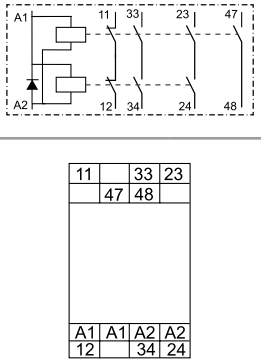

F 7S12 - Electrical life (AC) v contact current - 7S.12

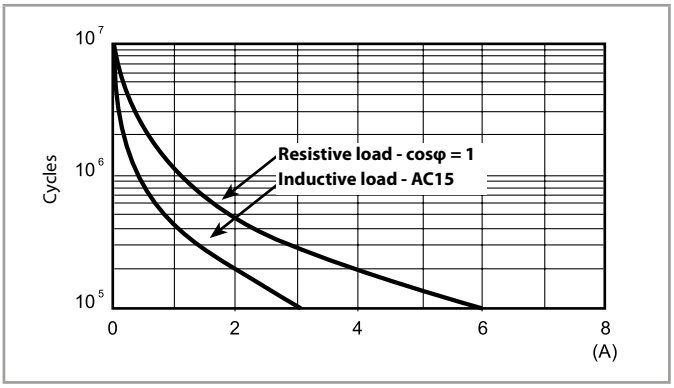

H 7S12* - Maximum DC breaking capacity - 7S.12

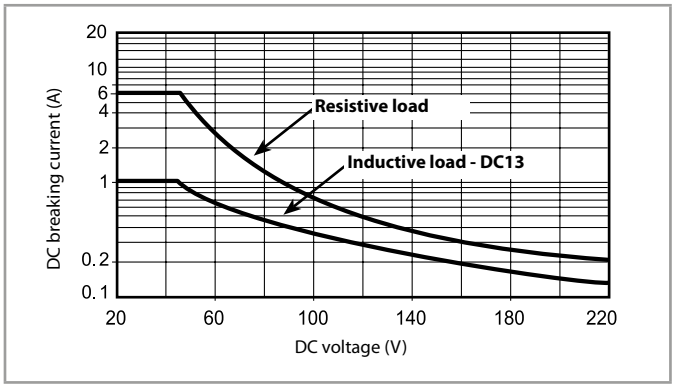

F 7S14 - Electrical life (AC) v contact current - 7S.14/34

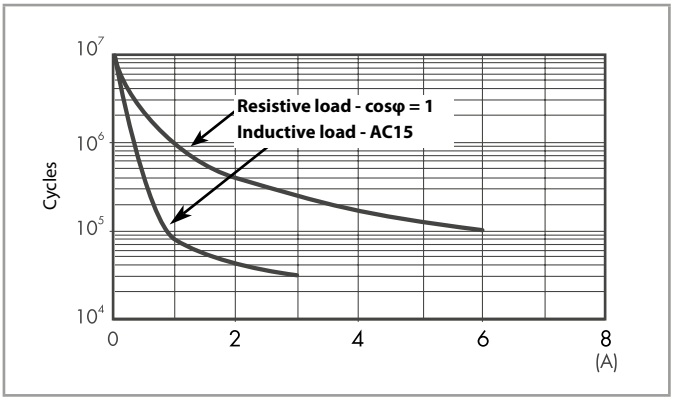

H 7S14* - Maximum DC1 breaking capacity - 7S.14/34

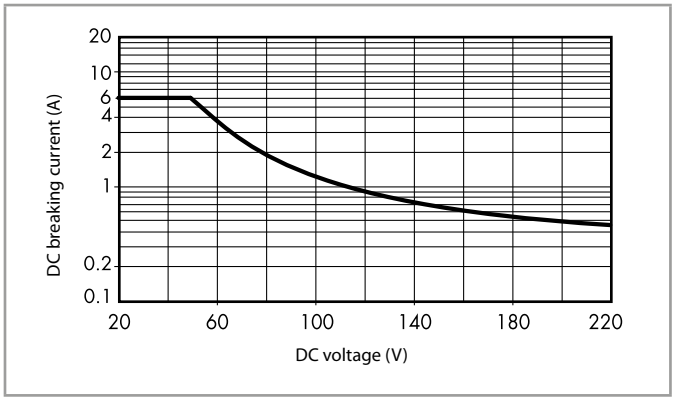

* When switching a load having voltage and current values under the curve, an electrical life of ≥ 100 · 10^3 can be expected.

XII-2025, www.findernet.com

Downloaded from Arrow.com.

Contact specifications

F 7S16 - Electrical life (AC) v contact current - 7S.16/36

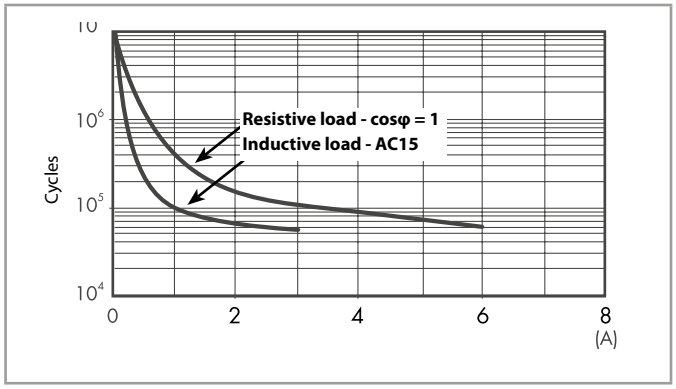

H 7S16* - Maximum DC1 breaking capacity - 7S.16/36

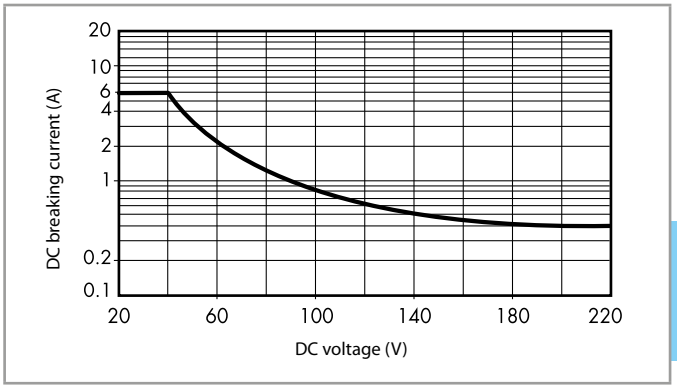

F 7S23 - Electrical life (AC) v contact current - 7S.23

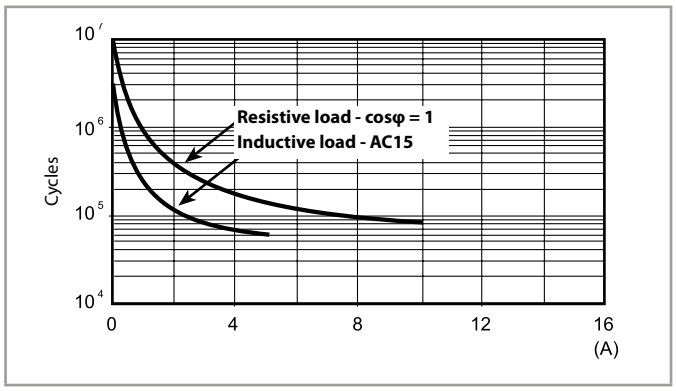

H 7S23* - Maximum DC breaking capacity - 7S.23

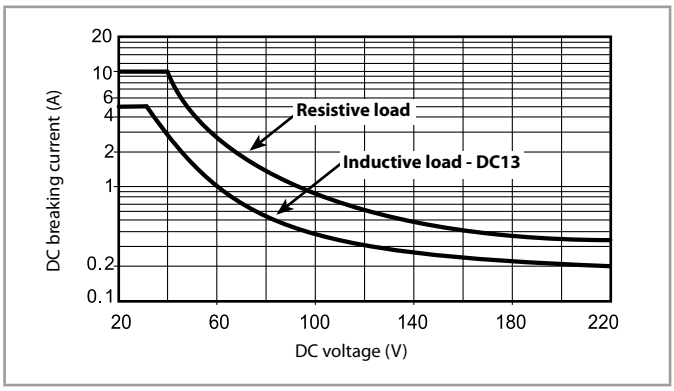

F 7S43 - Electrical life (AC) v contact current - 7S.43/63

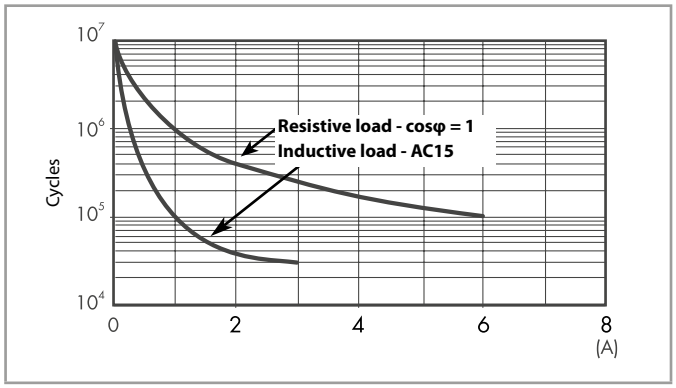

H 7S43* - Maximum DC breaking capacity - 7S.43/63

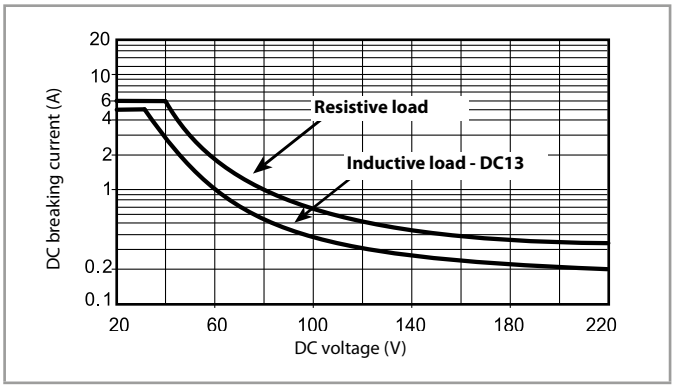

* When switching a load having voltage and current values under the curve, an electrical life of ≥ 100 · 10^3 can be expected.

H 7S14/34 - Maximum DC13 breaking capacity - 7S.14/34

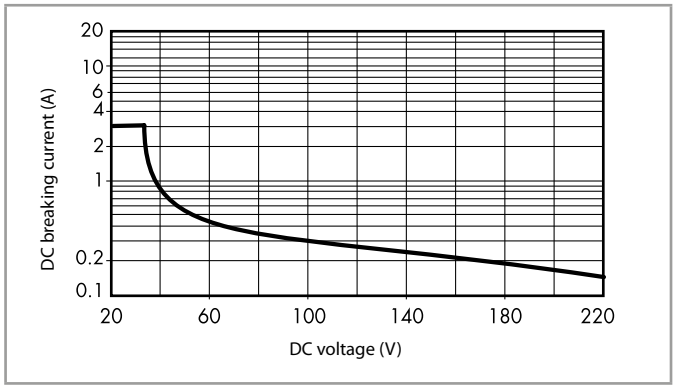

H 7S16/36 - Maximum DC13 breaking capacity - 7S.16/36

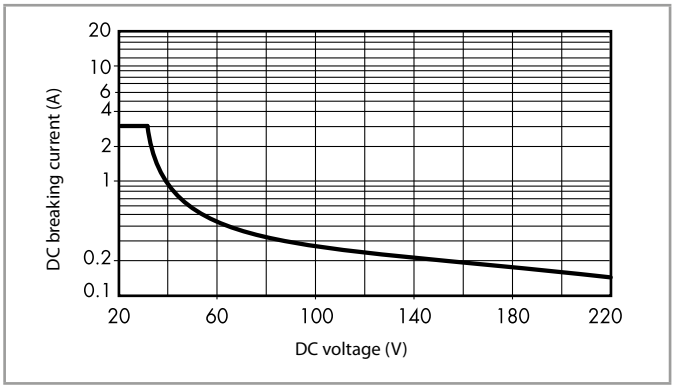

Downloaded from Arrow.com.

Coil specifications

DC coil data - type 7S.12/32

Nominal voltage U_N	Coil code	Operating range U_{min}	U_{max}	Rated input current at U_N I_N	Rated power at U_N
V		V	V	mA	W
12	**9**.012	9.6	14.4	55	0.7
24	**9**.024	16.8	30	38.2	0.9

AC coil data - type 7S.12/32

Nominal voltage U_N	Coil code	Operating range U_{min}	U_{max}	Rated input current at U_N I_N	Rated power at U_N
V		V	V	mA	VA/W
110…125	**8**.120	93	138	9.8	1.2/1.1
230…240	**8**.230	195	264	11.8	2.8/1.2

C

DC coil data - type 7S.14/34 / 7S.16/36

Nominal voltage U_N	Coil code	Operating range U_{min}	U_{max}	Rated input current at U_N I_N	Rated power at U_N
V		V	V	mA	W
12	**9**.012	9.6	14.4	64.7	0.8
24	**9**.024	16.8	30	42.2	1
110	**9**.110	77	138	11.6	1.4

AC coil data - type 7S.14/34 / 7S.16/36

Nominal voltage U_N	Coil code	Operating range U_{min}	U_{max}	Rated input current at U_N I_N	Rated power at U_N
V		V	V	mA	VA/W
110…125	**8**.120	93	138	10.2	1.3/1.1
230…240	**8**.230	195	264	11.8	2.9/1.2

DC coil data - type 7S.23

Nominal voltage U_N	Coil code	Operating range U_{min}	U_{max}	Rated input current at U_N I_N	Rated power at U_N
V		V	V	mA	W
12	**9**.012	9.6	14.4	47.1	0.6
24	**9**.024	19.2	28.8	26.6	0.6
48	**9**.048	38.4	57.6	16.2	0.8
110	**9**.110	88	132	8.8	1

DC coil data - type 7S.43/63

Nominal voltage U_N	Coil code	Operating range U_{min}	U_{max}	Rated input current at U_N I_N	Rated power at U_N
V		V	V	mA	W
12	**9**.012	10.2	13.2	105	1.3
24	**9**.024	20.4	26.4	60	1.45
48	**9**.048	40.8	52.8	36	1.6
110	**9**.110	93.5	121	20	1.7

R 7S - DC coil operating range v ambient temperature - 7S.12/32 / 7S.23 / 7S.14/34 / 7S.16/36

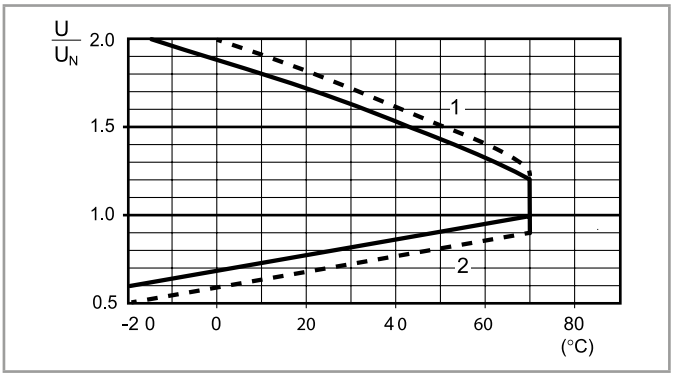

1 - Max. permitted coil voltage.
2 - Min. pick-up voltage with coil at ambient temperature.
- - - - - 24 and 110 V DC coils only excluding 7S.23

R 7S - AC coil operating range v ambient temperature - 7S.12/32 / 7S.14/34 / 7S.16/36

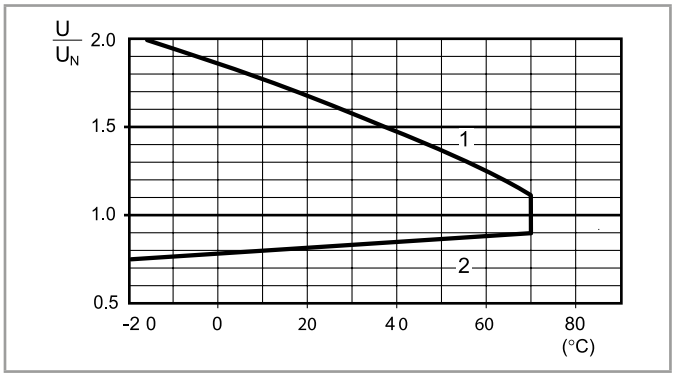

1 - Max. permitted coil voltage.
2 - Min. pick-up voltage with coil at ambient temperature.

R 7S - DC coil operating range v ambient temperature - 7S.43/63

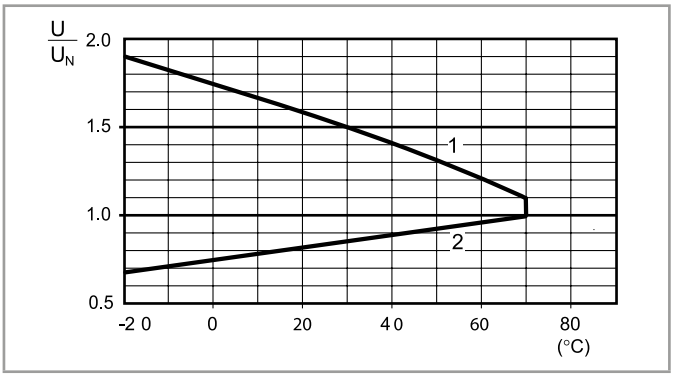

1 - Max. permitted coil voltage.
2 - Min. pick-up voltage with coil at ambient temperature.

Downloaded from Arrow.com.

Example wiring diagrams

Type 7S.x2

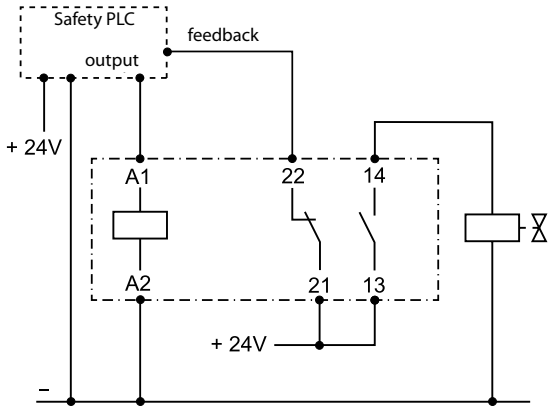

Type 7S.x4...4220

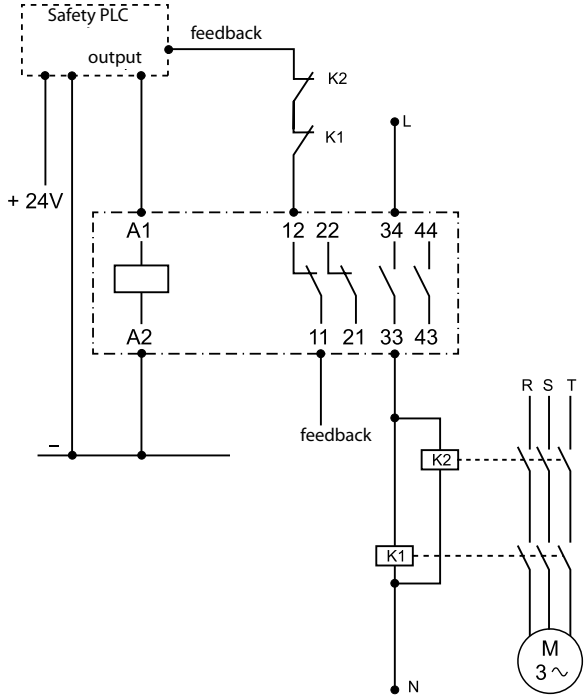

Type 7S.43/63

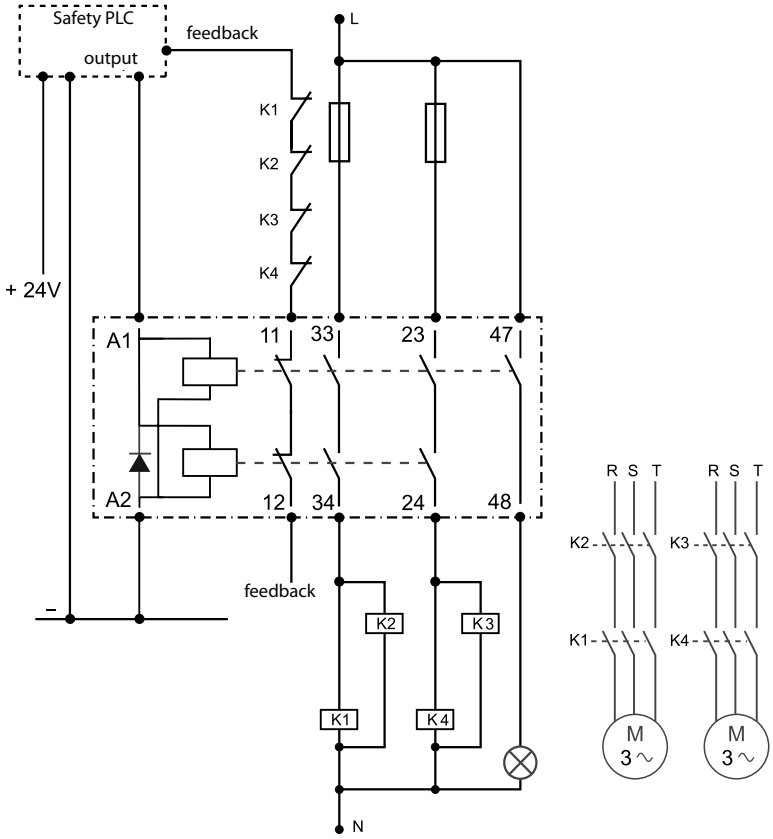

Downloaded from Arrow.com.

C

Outline drawings

Types 7S.12/14/16/43
Screwless terminal

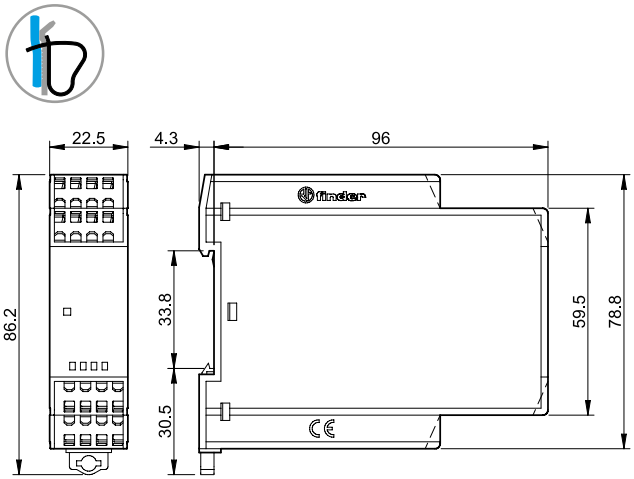

Type 7S.23
Box clamp

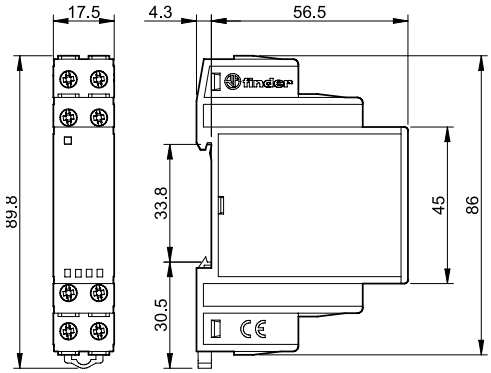

Type 7S.32
Box clamp

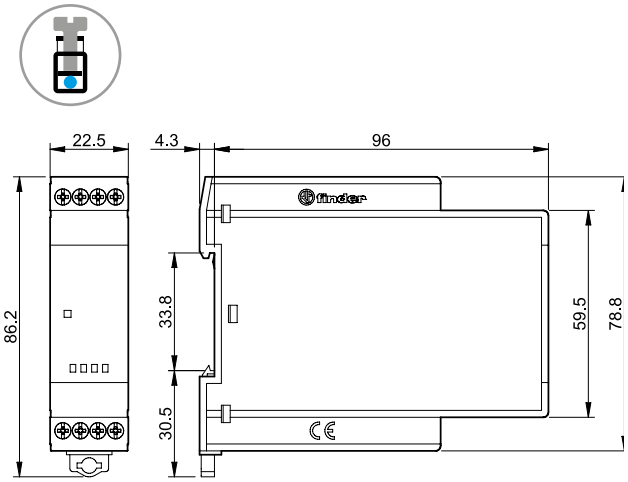

Type 7S.34
Box clamp

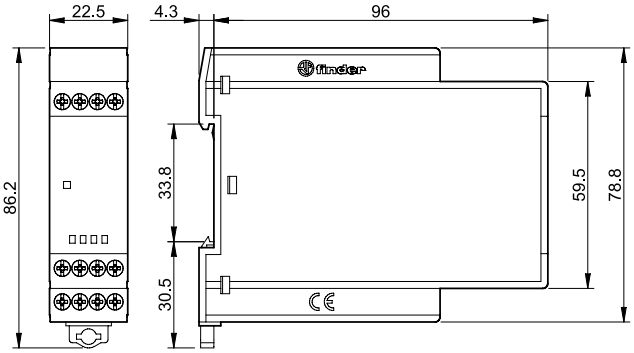

Type 7S.36
Box clamp

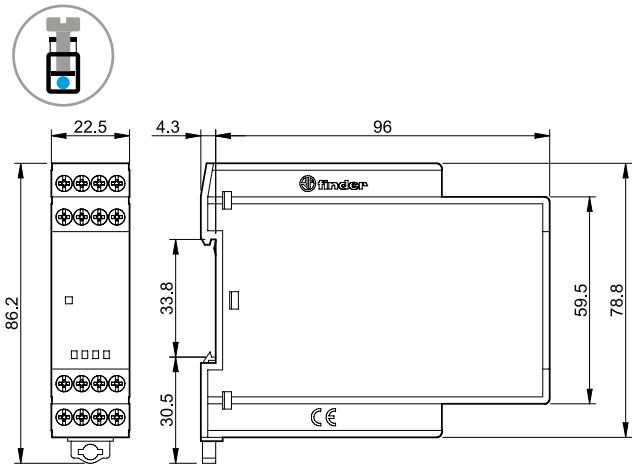

Type 7S.63
Box clamp

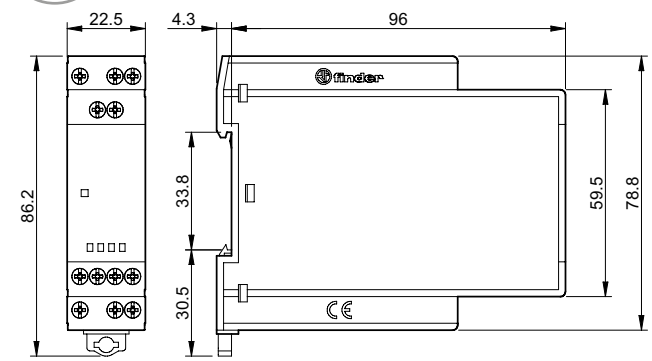

Accessories

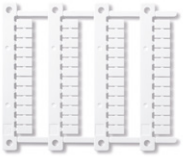

060.48

Sheet of marker tags, plastic, 48 tags, 6 x 12 mm, for CEMBRE thermal transfer printers	060.48

Downloaded from Arrow.com.