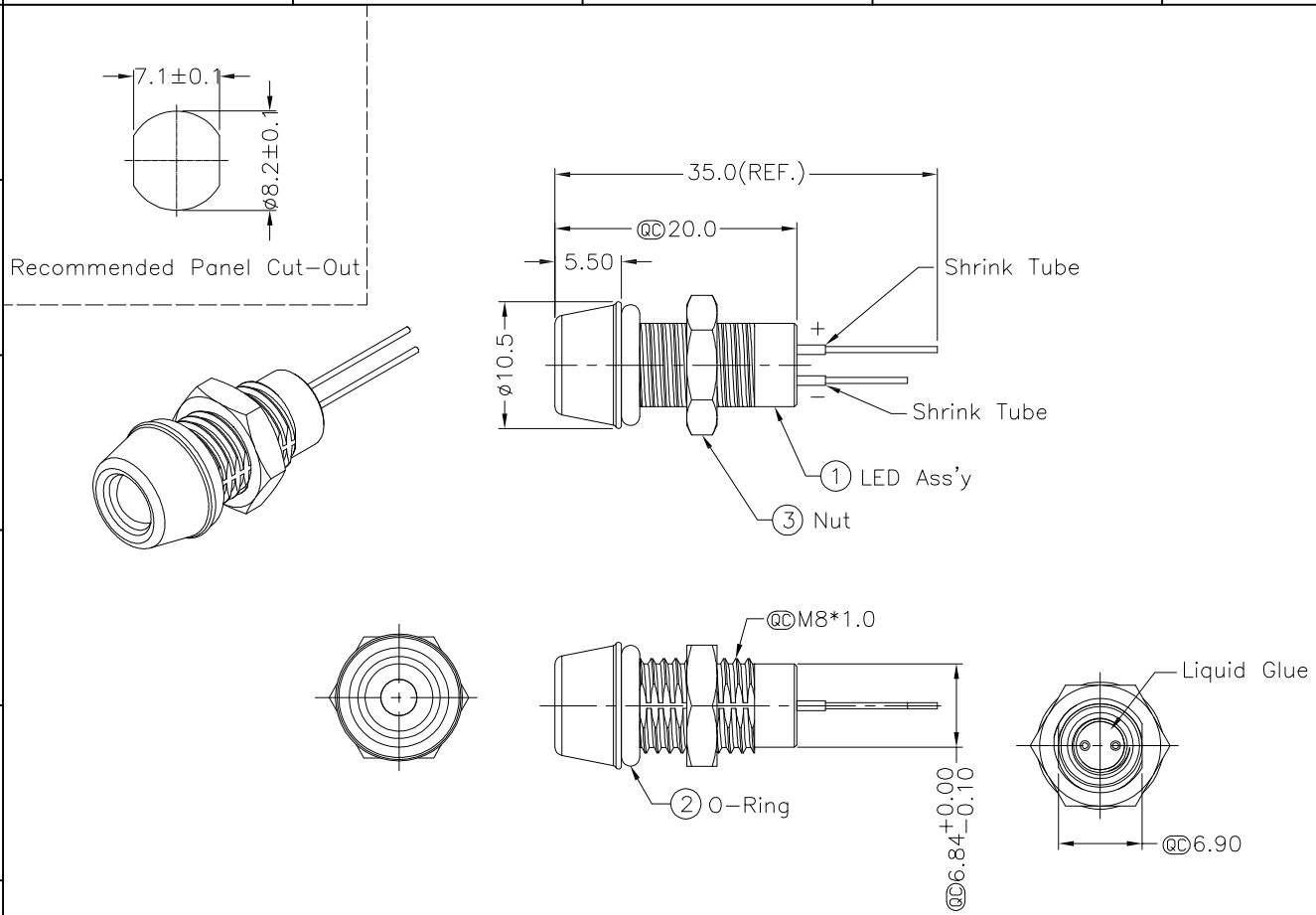

Notes:

QC Important Dimension To Check
Waterproof Rate: IP67
LED Holder:Brass, Nickel Plating
LED: ø3 mm,White
Gasket:EPDM,Black
Screw Nut:Brass, Nickel Plating
Operating Voltage: DC 4V
Operating Temperature:−40~+80°C
For Panel Thickness 6.5mm Max.

RoHS compliant

Scale	Free					Date	Name	Customer-No.
TOLERANCE					Drawn	11.03.2014	Winnie	
.X	±0.25				Approved	11.03.2014	Winnie	ASSMANN WSW-No. A-LED8-1RBAS-MR7-1
.XX	±0.10							
.XXX	±0.05							Drawing-No. ASS 6233 CO rev00
Angle	±1°							
		0	Drawn	11.03.2014	Winnie			
		Id.	Modification	Date	Name			Replace / Sheet

ASSMANN WSW components

Downloaded from Arrow.com.