3.3 V ECL ÷2, ÷4, ÷8 Clock Generation Chip

MC100LVEL34

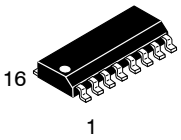

SOIC−16
D SUFFIX
CASE 751B

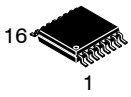

TSSOP−16
DT SUFFIX
CASE 948F

Description

The MC100LVEL34 is a low skew ÷2, ÷4, ÷8 clock generation chip designed explicitly for low skew clock generation applications. The internal dividers are synchronous to each other, therefore, the common output edges are all precisely aligned. The V_{BB} pin, an internally generated voltage supply, is available to this device only. For single−ended input conditions, the unused differential input is connected to V_{BB} as a switching reference voltage. V_{BB} may also rebias AC coupled inputs. When used, decouple V_{BB} and V_{CC} via a 0.01 μF capacitor and limit current sourcing or sinking to 0.5 mA. When not used, V_{BB} should be left open.

The common enable ($\overline{EN}$) is synchronous so that the internal dividers will only be enabled/disabled when the internal clock is already in the LOW state. This avoids any chance of generating a runt clock pulse on the internal clock when the device is enabled/disabled as can happen with an asynchronous control. An internal runt pulse could lead to losing synchronization between the internal divider stages. The internal enable flip-flop is clocked on the falling edge of the input clock; therefore, all associated specification limits are referenced to the negative edge of the clock input.

Upon start−up, the internal flip-flops will attain a random state; the master reset (MR) input allows for the synchronization of the internal dividers, as well as multiple LVEL34s in a system.

Features

- 50 ps Typical Output-to-Output Skew
- Synchronous Enable/Disable
- Master Reset for Synchronization
- 1.5 GHz Toggle Frequency
- The 100 Series Contains Temperature Compensation.
- PECL Mode Operating Range:
  V_{CC} = 3.0 V to 3.8 V with V_{EE} = 0 V
- NECL Mode Operating Range:
  V_{CC} = 0 V with V_{EE} = −3.0 V to −3.8 V
- Open Input Default State
- LVDS Input Compatible
- These Devices are Pb-Free, Halogen Free and are RoHS Compliant

MARKING DIAGRAM



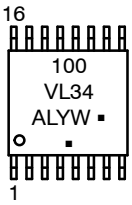

A = Assembly Location
L, WL = Wafer Lot
Y = Year
W, WW = Work Week
G or ▪ = Pb−Free Package

(Note: Microdot may be in either location)

*For additional marking information, refer to Application Note AND8002/D.

ORDERING INFORMATION

Device	Package	Shipping†
MC100LVEL34DR2G	SOIC−16 (Pb−Free)	2500 / Tape & Reel
MC100LVEL34DTR2G	TSSOP−16 (Pb−Free)	2500 / Tape & Reel

DISCONTINUED (Note 1)

MC100LVEL34DTG	TSSOP−16 (Pb−Free)	96 / Units & Rail

†For information on tape and reel specifications, including part orientation and tape sizes, please refer to our Tape and Reel Packaging Specifications Brochure, BRD8011/D.

1. **DISCONTINUED:** This device is not recommended for new design. Please contact your **onsemi** representative for information. The most current information on this device may be available on www.onsemi.com.

© Semiconductor Components Industries, LLC, 2014

Downloaded from Arrow.com.

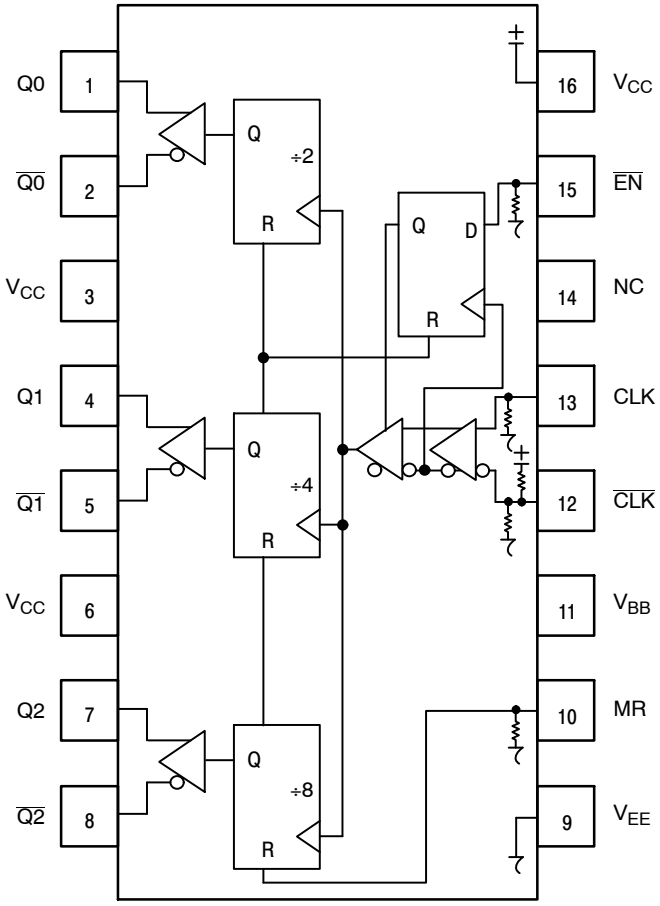

Warning: All V_{CC} and V_{EE} pins must be externally connected to Power Supply to guarantee proper operation.

Figure 1. 16−Lead Pinout (Top View) **and Logic Diagram**

Table 1. PIN DESCRIPTION

PIN	FUNCTION
CLK*, $\overline{CLK}$**	ECL Diff Clock Inputs
$\overline{EN}$*	ECL Sync Enable
MR*	ECL Master Reset
Q0, $\overline{Q0}$	ECL Diff ÷2 Outputs
Q1, $\overline{Q1}$	ECL Diff ÷4 Outputs
Q2, $\overline{Q2}$	ECL Diff ÷8 Outputs
V_{BB}	Reference Voltage Output
V_{CC}	Positive Supply
V_{EE}	Negative Supply
NC	No Connect

* Pins will default LOW when left open.
***Pins will default to V_{CC}/2 when left open.

Table 2. FUNCTION TABLE

CLK	$\overline{EN}$	MR	FUNCTION
Z	L	L	Divide
ZZ	H	L	Hold Q_{0-3}
X	X	H	Reset Q_{0-3}

Z = Low-to-High Transition
ZZ = High-to-Low Transition

Table 3. ATTRIBUTES

Characteristics	Value
Internal Input Pulldown Resistor	75 kΩ
Internal Input Pullup Resistor	37.5 kΩ
ESD Protection Human Body Model Machine Model Charged Device Model	 > 2 kV > 200 V > 2 kV
Moisture Sensitivity, Indefinite Time Out of Drypack (Note 1)	Pb−Free Pkg
SOIC−16 TSSOP−16	Level 1 Level 1
Flammability Rating Oxygen Index: 28 to 34	 UL 94 V−0 @ 0.125 in
Transistor Count	210 Devices
Meets or exceeds JEDEC Spec EIA/JESD78 IC Latchup Test	

1. For additional information, see Application Note AND8003/D.

Share Feedback
Your Opinion Matters

Downloaded from Arrow.com.

Table 4. MAXIMUM RATINGS

Symbol	Parameter	Condition 1	Condition 2	Rating	Unit
V_{CC}	PECL Mode Power Supply	V_{EE} = 0 V		6	V
V_{EE}	NECL Mode Power Supply	V_{CC} = 0 V		−6	V
V_I	PECL Mode Input Voltage NECL Mode Input Voltage	V_{EE} = 0 V V_{CC} = 0 V	$V_I \le V_{CC}$ $V_I \ge V_{EE}$	6 −6	V V
I_{out}	Output Current	Continuous Surge		50 100	mA mA
I_{BB}	V_{BB} Sink/Source			±0.5	mA
T_A	Operating Temperature Range			−40 to +85	°C
T_{stg}	Storage Temperature Range			−65 to +150	°C
θ_{JA}	Thermal Resistance (Junction−to−Ambient)	0 lfpm 500 lfpm	SOIC−16 SOIC−16	100 60	°C/W °C/W
θ_{JC}	Thermal Resistance (Junction−to−Case)	Standard Board	SOIC−16	33 to 36	°C/W
θ_{JA}	Thermal Resistance (Junction−to−Ambient)	0 lfpm 500 lfpm	TSSOP−16 TSSOP−16	138 108	°C/W °C/W
θ_{JC}	Thermal Resistance (Junction−to−Case)	Standard Board	TSSOP−16	33 to 36	°C/W
T_{sol}	Wave Solder			265	°C

Stresses exceeding those listed in the Maximum Ratings table may damage the device. If any of these limits are exceeded, device functionality should not be assumed, damage may occur and reliability may be affected.

Table 5. 100LVEL DC CHARACTERISTICS, PECL (V_{CC} = 3.3 V, V_{EE} = 0 V (Note 2))

Symbol	Characteristic	−40°C			25°C			85°C			Unit
		Min	Typ	Max	Min	Typ	Max	Min	Typ	Max	
I_{EE}	Power Supply Current	40	50	60	40	50	60	42	52	62	mA
V_{OH}	Output HIGH Voltage (Note 3)	2155	2280	2405	2155	2280	2405	2155	2280	2405	mV
V_{OL}	Output LOW Voltage (Note 3)	1305	1570	1725	1305	1570	1725	1305	1570	1725	mV
V_{IH}	Input HIGH Voltage (Single−Ended)	2075		2420	2075		2420	2075		2420	mV
V_{IL}	Input LOW Voltage (Single−Ended)	1305		1675	1305		1675	1305		1675	mV
V_{BB}	Output Voltage Reference	1775	1875	1975	1775	1875	1975	1775	1875	1975	mV
V_{IHCMR}	Input HIGH Voltage Common Mode Range (Differential Configuration) (Note 4)	1.2		3.3	1.2		3.3	1.2		3.3	V
I_{IH}	Input HIGH Current			150			150			150	μA
I_{IL}	Input LOW Current D $\overline{D}$	 0.5 −150			 0.5 −150			 0.5 −150			μA

NOTE: Device will meet the specifications after thermal equilibrium has been established when mounted in a test socket or printed circuit board with maintained transverse airflow greater than 500 lfpm.

2. Input and output parameters vary 1:1 with V_{CC}. V_{EE} can vary +0.925 V to −0.5 V.
3. All loading with 50 Ω to V_{CC} − 2.0 V.
4. V_{IHCMR} min varies 1:1 with V_{EE}, V_{IHCMR} max varies 1:1 with V_{CC}. The V_{IHCMR} range is referenced to the most positive side of the differential input signal.

Share Feedback
Your Opinion Matters

Downloaded from Arrow.com.

Table 6. 100LVEL DC CHARACTERISTICS, NECL (V_{CC} = 0 V, V_{EE} = −3.8 V to −3.0 V (Note 5))

Symbol	Characteristic	−40°C			25°C			85°C			Unit
		Min	Typ	Max	Min	Typ	Max	Min	Typ	Max	
I_{EE}	Power Supply Current	23	30	40	23	30	40	23	30	40	mA
I_{EE}	Power Supply Current	40	50	60	40	50	60	42	52	62	mA
V_{OH}	Output HIGH Voltage (Note 6)	−1145	−1020	−895	−1145	−1020	−895	−1145	−1020	−895	mV
V_{OL}	Output LOW Voltage (Note 6)	−1995	−1700	−1575	−1995	−1700	−1575	−1995	−1700	−1575	mV
V_{IH}	Input HIGH Voltage (Single−Ended)	−1225		−880	−1225		−880	−1225		−880	mV
V_{IL}	Input LOW Voltage (Single−Ended)	−1995		−1625	−1995		−1625	−1995		−1625	mV
V_{BB}	Output Voltage Reference	−1525	−1425	−1325	−1525	−1425	−1325	−1525	−1425	−1325	mV
V_{IHCMR}	Input HIGH Voltage Common Mode Range (Differential Configuration) (Note 7)	V_{EE} + 1.2		0.0	V_{EE} + 1.2		0.0	V_{EE} + 1.2		0.0	V
I_{IH}	Input HIGH Current			150			150			150	μA
I_{IL}	Input LOW Current D $\overline{D}$	 0.5 −150			 0.5 −150			 0.5 −150			μA

NOTE: Device will meet the specifications after thermal equilibrium has been established when mounted in a test socket or printed circuit board with maintained transverse airflow greater than 500 lfpm.

5. Input and output parameters vary 1:1 with V_{CC}.
6. All loading with 50 Ω to V_{CC} − 2.0 V.
7. V_{IHCMR} min varies 1:1 with V_{EE}, V_{IHCMR} max varies 1:1 with V_{CC}. The V_{IHCMR} range is referenced to the most positive side of the differential input signal.

Table 7. AC CHARACTERISTICS V_{CC} = 0 V; V_{EE} = −3.0 V to −5.5 V or V_{CC} = 3.0 V to 5.5 V; V_{EE} = 0 V (Note 8)

Symbol	Characteristic	−40°C			25°C			85°C			Unit
		Min	Typ	Max	Min	Typ	Max	Min	Typ	Max	
f_{max}	Maximum Toggle Frequency (Figure 4)	1.5			1.5			1.5			GHz
t_{PLH} t_{PHL}	Propagation Delay to Output CLK to Q0, Q1, Q2 MR to Q	 550 500	 650 600	 1000 1000	 600 550	 700 650	 1000 1000	 650 600	 750 700	 1000 1000	ps
t_{JITTER}	Cycle−to−Cycle Jitter (Figure 4)		< 1			< 1			< 1		ps
t_S	Setup Time $\overline{EN}$	150	50		150	50		150	50		ps
t_H	Hold Time $\overline{EN}$	200	100		200	100		200	100		ps
t_{RR}	Set/Reset Recovery	300	200		300	200		300	200		ps
V_{PP}	Input Swing (Note 9)	150		1000	150		1000	150		1000	mV
t_r t_f	Output Rise/Fall Times Q (20% − 80%)	120	170	400	140	180	400	160	200	400	ps

NOTE: Device will meet the specifications after thermal equilibrium has been established when mounted in a test socket or printed circuit board with maintained transverse airflow greater than 500 lfpm.

8. Measured using a 750 mV source, 50% duty cycle clock source. All loading with 50 Ω to VCC − 2.0 V.
9. VPP(min) is minimum input swing for which AC parameters guaranteed. The device has a DC gain of ≈40.

Product parametric performance is indicated in the Electrical Characteristics for the listed test conditions, unless otherwise noted. Product performance may not be indicated by the Electrical Characteristics if operated under different conditions.

Share Feedback
Your Opinion Matters

Downloaded from Arrow.com.

There are two distinct functional relationships between the Master Reset and Clock:

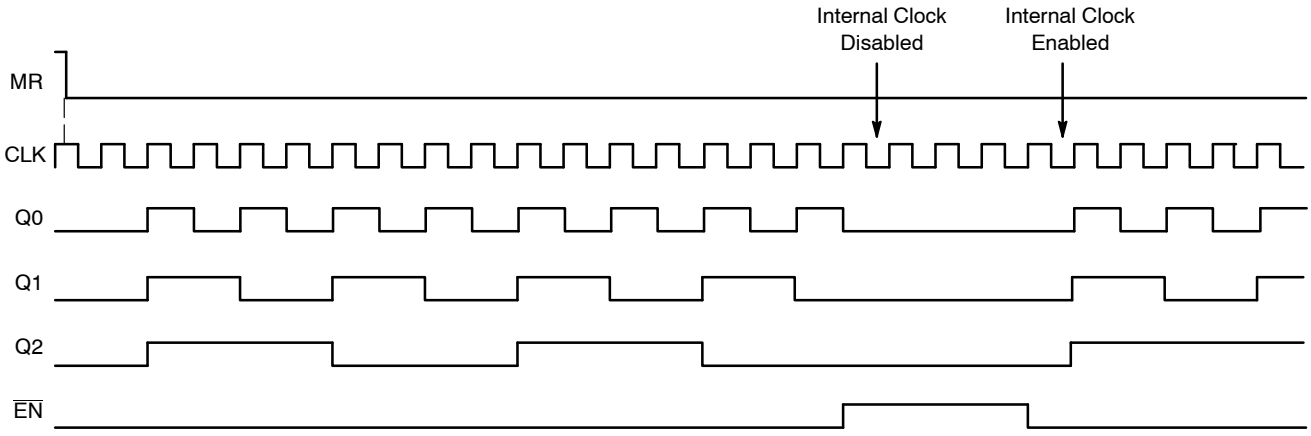

CASE 1: If the MR is Deasserted (H−L), while the Clock is Still High, the Outputs will Follow the Second Ensuing Clock Rising Edge

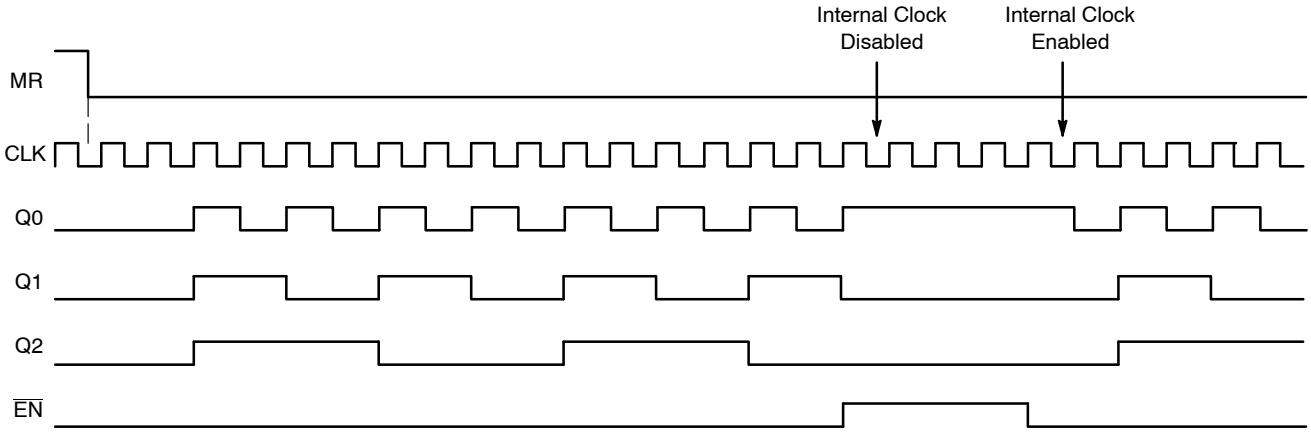

CASE 2: If the MR is Deasserted (H−L), after the Clock has Transitioned Low, the Outputs will Follow the Third Ensuing Clock Rising Edge

Figure 2. Timing Diagrams

The $\overline{EN}$ signal will “freeze” the internal divider flip−flops on the first falling edge of CLK after its assertion. The internal divider flip−flops will maintain their state during the freeze. When $\overline{EN}$ is deasserted (LOW), and after the next falling edge of CLK, then the internal divider flip−flops will “unfreeze” and continue to their next state count with proper phase relationships.

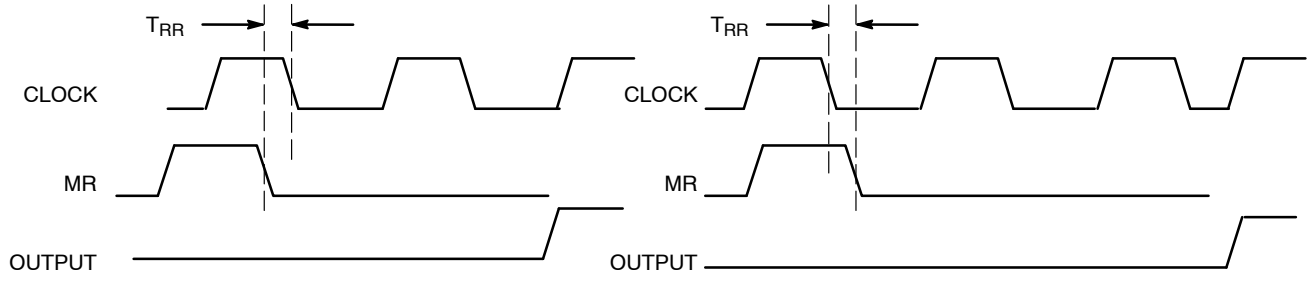

Figure 3. Reset Recovery Time

Share Feedback
Your Opinion Matters

Downloaded from Arrow.com.

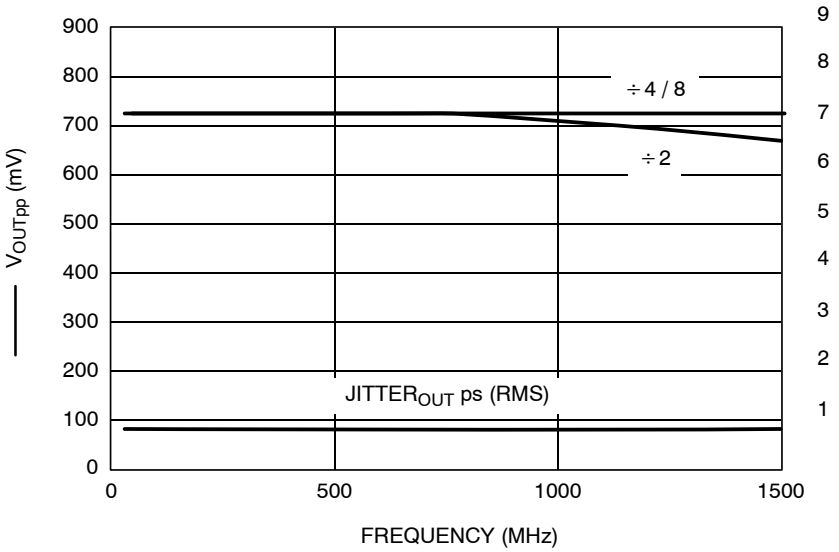

Figure 4. F_{max}/Jitter

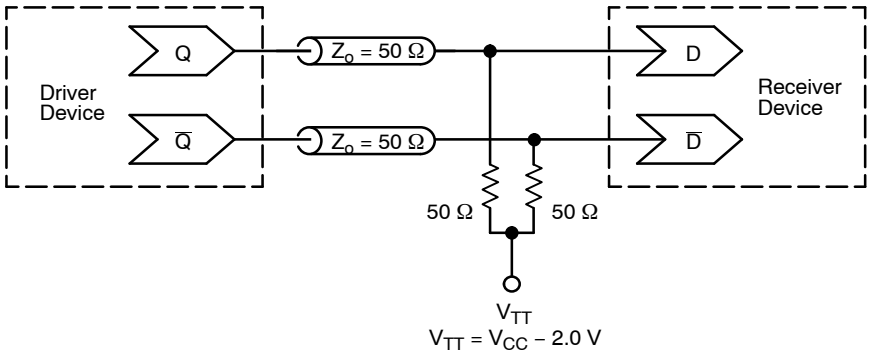

Figure 5. Typical Termination for Output Driver and Device Evaluation (See Application Note AND8020/D – Termination of ECL Logic Devices.)

Resource Reference of Application Notes

AN1405/D – ECL Clock Distribution Techniques

AN1406/D – Designing with PECL (ECL at +5.0 V)

AN1503/D – ECLinPS™ I/O SPiCE Modeling Kit

AN1504/D – Metastability and the ECLinPS Family

AN1568/D – Interfacing Between LVDS and ECL

AN1672/D – The ECL Translator Guide

AND8001/D – Odd Number Counters Design

AND8002/D – Marking and Date Codes

AND8020/D – Termination of ECL Logic Devices

AND8066/D – Interfacing with ECLinPS

AND8090/D – AC Characteristics of ECL Devices

ECLinPS is registered trademark of Semiconductor Components Industries, LLC dba “**onsemi**” or its affiliates and/or subsidiaries in the United States and/or other countries.

Share Feedback
Your Opinion Matters

Downloaded from Arrow.com.

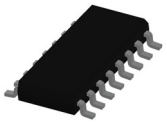

SOIC−16 9.90x3.90x1.37 1.27P
CASE 751B
ISSUE M

DATE 18 OCT 2024

NOTES:
1. DIMENSIONING AND TOLERANCING PER ASME Y14.5M, 2018.
2. DIMENSION IN MILLIMETERS. ANGLE IN DEGREES.
3. DIMENSIONS D AND E1 DO NOT INCLUDE MOLD PROTRUSION.
4. MAXIMUM MOLD PROTRUSION 0.15mm PER SIDE.
5. DIMENSION b DOES NOT INCLUDE DAMBAR PROTRUSION. ALLOWABLE DAMBAR PROTRUSION SHALL BE 0.127mm TOTAL IN EXCESS OF THE b DIMENSION AT MAXIMUM MATERIAL CONDITION.

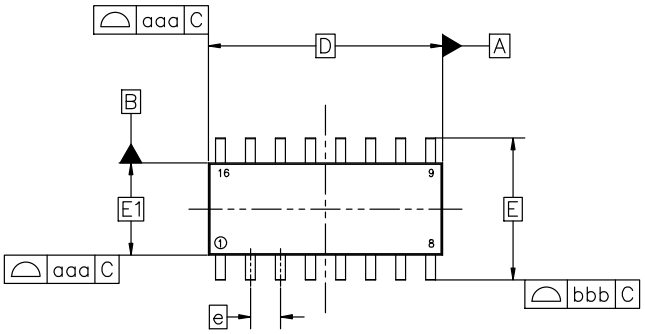

TOP VIEW

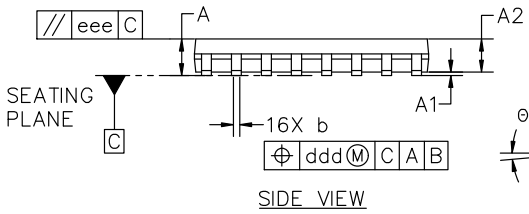

SIDE VIEW

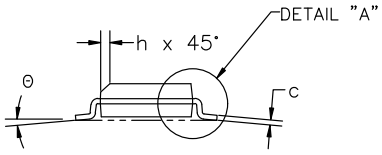

END VIEW

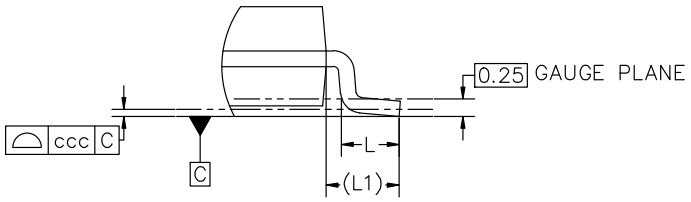

DETAIL "A"
Scale 3:1

MILLIMETERS			
DIM	MIN	NOM	MAX
A	1.35	1.55	1.75
A1	0.10	0.18	0.25
A2	1.25	1.37	1.50
b	0.35	0.42	0.49
c	0.19	0.22	0.25
D	9.90 BSC		
E	6.00 BSC		
E1	3.90 BSC		
e	1.27 BSC		
h	0.25	−−−	0.50
L	0.40	0.83	1.25
L1	1.05 REF		
Θ	0°	−−−	7°
TOLERANCE OF FORM AND POSITION			
aaa	0.10		
bbb	0.20		
ccc	0.10		
ddd	0.25		
eee	0.10		

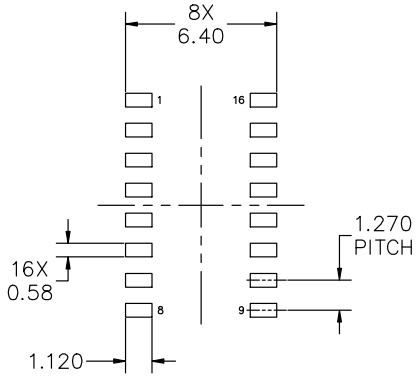

RECOMMENDED MOUNTING FOOTPRINT

*FOR ADDITIONAL INFORMATION ON OUR PB−FREE STRATEGY AND SOLDERING DETAILS, PLEASE DOWNLOAD THE onsemi SOLDERING AND MOUNTING TECHNIQUES REFERENCE MANUAL, SOLDERRM/D

DOCUMENT NUMBER:	**98ASB42566B**	Electronic versions are uncontrolled except when accessed directly from the Document Repository. Printed versions are uncontrolled except when stamped "CONTROLLED COPY" in red.	
DESCRIPTION:	**SOIC−16 9.90X3.90X1.37 1.27P**		**PAGE 1 OF 2**

onsemi and onsemi are trademarks of Semiconductor Components Industries, LLC dba **onsemi** or its subsidiaries in the United States and/or other countries. **onsemi** reserves the right to make changes without further notice to any products herein. **onsemi** makes no warranty, representation or guarantee regarding the suitability of its products for any particular purpose, nor does **onsemi** assume any liability arising out of the application or use of any product or circuit, and specifically disclaims any and all liability, including without limitation special, consequential or incidental damages. **onsemi** does not convey any license under its patent rights nor the rights of others.

© Semiconductor Components Industries, LLC, 2019

Downloaded from Arrow.com.

SOIC−16 9.90x3.90x1.37 1.27P
CASE 751B
ISSUE M

DATE 18 OCT 2024

GENERIC MARKING DIAGRAM*

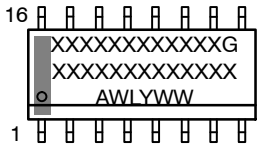

XXXXX = Specific Device Code
A = Assembly Location
WL = Wafer Lot
Y = Year
WW = Work Week
G = Pb−Free Package

*This information is generic. Please refer to device data sheet for actual part marking. Pb−Free indicator, “G” or microdot “▪”, may or may not be present. Some products may not follow the Generic Marking.

STYLE 1:

PIN 1.	COLLECTOR
2.	BASE
3.	EMITTER
4.	NO CONNECTION
5.	EMITTER
6.	BASE
7.	COLLECTOR
8.	COLLECTOR
9.	BASE
10.	EMITTER
11.	NO CONNECTION
12.	EMITTER
13.	BASE
14.	COLLECTOR
15.	EMITTER
16.	COLLECTOR

STYLE 2:

PIN 1.	CATHODE
2.	ANODE
3.	NO CONNECTION
4.	CATHODE
5.	CATHODE
6.	NO CONNECTION
7.	ANODE
8.	CATHODE
9.	CATHODE
10.	ANODE
11.	NO CONNECTION
12.	CATHODE
13.	CATHODE
14.	NO CONNECTION
15.	ANODE
16.	CATHODE

STYLE 3:

PIN 1.	COLLECTOR, DYE #1
2.	BASE, #1
3.	EMITTER, #1
4.	COLLECTOR, #1
5.	COLLECTOR, #2
6.	BASE, #2
7.	EMITTER, #2
8.	COLLECTOR, #2
9.	COLLECTOR, #3
10.	BASE, #3
11.	EMITTER, #3
12.	COLLECTOR, #3
13.	COLLECTOR, #4
14.	BASE, #4
15.	EMITTER, #4
16.	COLLECTOR, #4

STYLE 4:

PIN 1.	COLLECTOR, DYE #1
2.	COLLECTOR, #1
3.	COLLECTOR, #2
4.	COLLECTOR, #2
5.	COLLECTOR, #3
6.	COLLECTOR, #3
7.	COLLECTOR, #4
8.	COLLECTOR, #4
9.	BASE, #4
10.	EMITTER, #4
11.	BASE, #3
12.	EMITTER, #3
13.	BASE, #2
14.	EMITTER, #2
15.	BASE, #1
16.	EMITTER, #1

STYLE 5:

PIN 1.	DRAIN, DYE #1
2.	DRAIN, #1
3.	DRAIN, #2
4.	DRAIN, #2
5.	DRAIN, #3
6.	DRAIN, #3
7.	DRAIN, #4
8.	DRAIN, #4
9.	GATE, #4
10.	SOURCE, #4
11.	GATE, #3
12.	SOURCE, #3
13.	GATE, #2
14.	SOURCE, #2
15.	GATE, #1
16.	SOURCE, #1

STYLE 6:

PIN 1.	CATHODE
2.	CATHODE
3.	CATHODE
4.	CATHODE
5.	CATHODE
6.	CATHODE
7.	CATHODE
8.	CATHODE
9.	ANODE
10.	ANODE
11.	ANODE
12.	ANODE
13.	ANODE
14.	ANODE
15.	ANODE
16.	ANODE

STYLE 7:

PIN 1.	SOURCE N-CH
2.	COMMON DRAIN (OUTPUT)
3.	COMMON DRAIN (OUTPUT)
4.	GATE P-CH
5.	COMMON DRAIN (OUTPUT)
6.	COMMON DRAIN (OUTPUT)
7.	COMMON DRAIN (OUTPUT)
8.	SOURCE P-CH
9.	SOURCE P-CH
10.	COMMON DRAIN (OUTPUT)
11.	COMMON DRAIN (OUTPUT)
12.	COMMON DRAIN (OUTPUT)
13.	GATE N-CH
14.	COMMON DRAIN (OUTPUT)
15.	COMMON DRAIN (OUTPUT)
16.	SOURCE N-CH

onsemi and ONSEMI are trademarks of Semiconductor Components Industries, LLC dba **onsemi** or its subsidiaries in the United States and/or other countries. **onsemi** reserves the right to make changes without further notice to any products herein. **onsemi** makes no warranty, representation or guarantee regarding the suitability of its products for any particular purpose, nor does **onsemi** assume any liability arising out of the application or use of any product or circuit, and specifically disclaims any and all liability, including without limitation special, consequential or incidental damages. **onsemi** does not convey any license under its patent rights nor the rights of others.

© Semiconductor Components Industries, LLC, 2019

Downloaded from Arrow.com.

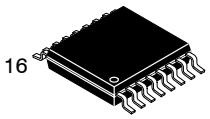

SCALE 2:1

TSSOP−16 WB
CASE 948F
ISSUE B

DATE 19 OCT 2006

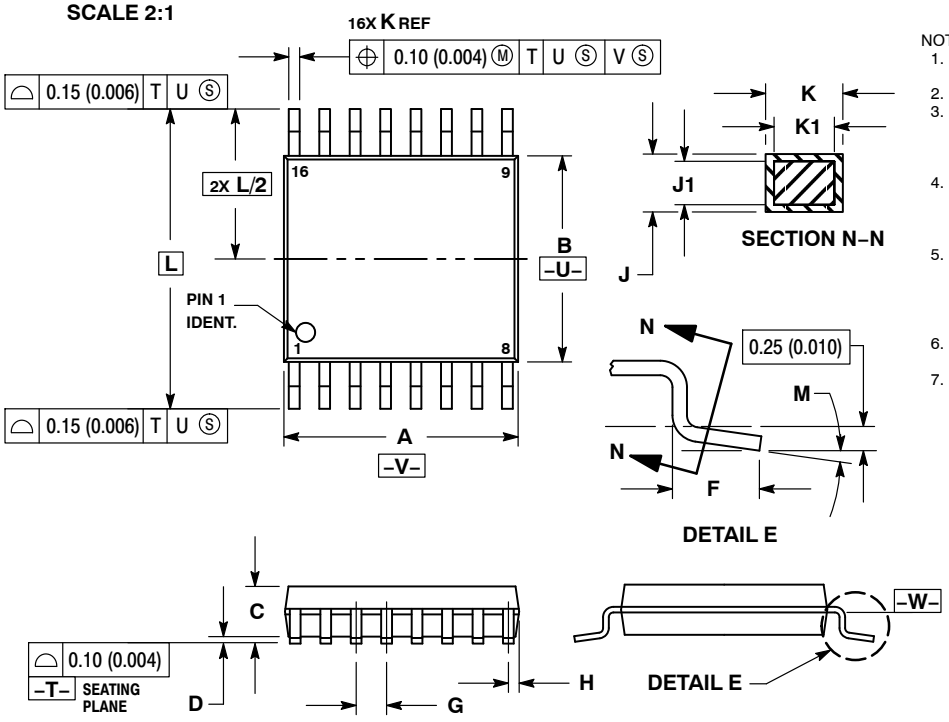

NOTES:
1. DIMENSIONING AND TOLERANCING PER ANSI Y14.5M, 1982.
2. CONTROLLING DIMENSION: MILLIMETER.
3. DIMENSION A DOES NOT INCLUDE MOLD FLASH. PROTRUSIONS OR GATE BURRS. MOLD FLASH OR GATE BURRS SHALL NOT EXCEED 0.15 (0.006) PER SIDE.
4. DIMENSION B DOES NOT INCLUDE INTERLEAD FLASH OR PROTRUSION. INTERLEAD FLASH OR PROTRUSION SHALL NOT EXCEED 0.25 (0.010) PER SIDE.
5. DIMENSION K DOES NOT INCLUDE DAMBAR PROTRUSION. ALLOWABLE DAMBAR PROTRUSION SHALL BE 0.08 (0.003) TOTAL IN EXCESS OF THE K DIMENSION AT MAXIMUM MATERIAL CONDITION.
6. TERMINAL NUMBERS ARE SHOWN FOR REFERENCE ONLY.
7. DIMENSION A AND B ARE TO BE DETERMINED AT DATUM PLANE −W−.

	MILLIMETERS		INCHES	
DIM	MIN	MAX	MIN	MAX
A	4.90	5.10	0.193	0.200
B	4.30	4.50	0.169	0.177
C	−−−	1.20	−−−	0.047
D	0.05	0.15	0.002	0.006
F	0.50	0.75	0.020	0.030
G	0.65 BSC		0.026 BSC	
H	0.18	0.28	0.007	0.011
J	0.09	0.20	0.004	0.008
J1	0.09	0.16	0.004	0.006
K	0.19	0.30	0.007	0.012
K1	0.19	0.25	0.007	0.010
L	6.40 BSC		0.252 BSC	
M	0 °	8 °	0 °	8 °

RECOMMENDED SOLDERING FOOTPRINT*

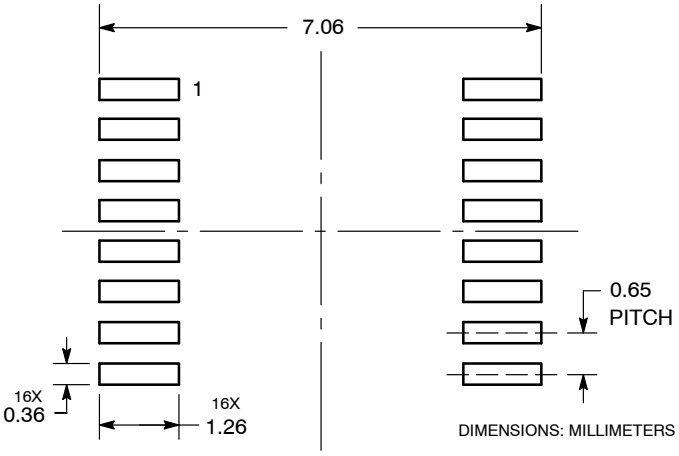

*For additional information on our Pb−Free strategy and soldering details, please download the **onsemi** Soldering and Mounting Techniques Reference Manual, SOLDERRM/D.

GENERIC MARKING DIAGRAM*

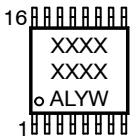

XXXX	= Specific Device Code
A	= Assembly Location
L	= Wafer Lot
Y	= Year
W	= Work Week
G or ▪	= Pb−Free Package

*This information is generic. Please refer to device data sheet for actual part marking. Pb−Free indicator, “G” or microdot “ ▪”, may or may not be present. Some products may not follow the Generic Marking.

DOCUMENT NUMBER:	**98ASH70247A**	Electronic versions are uncontrolled except when accessed directly from the Document Repository. Printed versions are uncontrolled except when stamped “CONTROLLED COPY” in red.
DESCRIPTION:	**TSSOP−16**	**PAGE 1 OF 1**

onsemi and onsemi are trademarks of Semiconductor Components Industries, LLC dba **onsemi** or its subsidiaries in the United States and/or other countries. **onsemi** reserves the right to make changes without further notice to any products herein. **onsemi** makes no warranty, representation or guarantee regarding the suitability of its products for any particular purpose, nor does **onsemi** assume any liability arising out of the application or use of any product or circuit, and specifically disclaims any and all liability, including without limitation special, consequential or incidental damages. **onsemi** does not convey any license under its patent rights nor the rights of others.

Downloaded from Arrow.com.

onsemi, ONSEMI , and other names, marks, and brands are registered and/or common law trademarks of Semiconductor Components Industries, LLC dba "**onsemi**" or its affiliates and/or subsidiaries in the United States and/or other countries. **onsemi** owns the rights to a number of patents, trademarks, copyrights, trade secrets, and other intellectual property. A listing of **onsemi**'s product/patent coverage may be accessed at www.onsemi.com/site/pdf/Patent−Marking.pdf. **onsemi** reserves the right to make changes at any time to any products or information herein, without notice. The information herein is provided "as−is" and **onsemi** makes no warranty, representation or guarantee regarding the accuracy of the information, product features, availability, functionality, or suitability of its products for any particular purpose, nor does **onsemi** assume any liability arising out of the application or use of any product or circuit, and specifically disclaims any and all liability, including without limitation special, consequential or incidental damages. Buyer is responsible for its products and applications using **onsemi** products, including compliance with all laws, regulations and safety requirements or standards, regardless of any support or applications information provided by **onsemi**. "Typical" parameters which may be provided in **onsemi** data sheets and/or specifications can and do vary in different applications and actual performance may vary over time. All operating parameters, including "Typicals" must be validated for each customer application by customer's technical experts. **onsemi** does not convey any license under any of its intellectual property rights nor the rights of others. **onsemi** products are not designed, intended, or authorized for use as a critical component in life support systems or any FDA Class 3 medical devices or medical devices with a same or similar classification in a foreign jurisdiction or any devices intended for implantation in the human body. Should Buyer purchase or use **onsemi** products for any such unintended or unauthorized application, Buyer shall indemnify and hold **onsemi** and its officers, employees, subsidiaries, affiliates, and distributors harmless against all claims, costs, damages, and expenses, and reasonable attorney fees arising out of, directly or indirectly, any claim of personal injury or death associated with such unintended or unauthorized use, even if such claim alleges that **onsemi** was negligent regarding the design or manufacture of the part. **onsemi** is an Equal Opportunity/Affirmative Action Employer. This literature is subject to all applicable copyright laws and is not for resale in any manner.

ADDITIONAL INFORMATION

TECHNICAL PUBLICATIONS:
Technical Library: www.onsemi.com/design/resources/technical−documentation
onsemi Website: www.onsemi.com

ONLINE SUPPORT: www.onsemi.com/support
For additional information, please contact your local Sales Representative at www.onsemi.com/support/sales

◊

Downloaded from Arrow.com.