Overview

KEMET's PEV227 is an Ultra-High CV Surface-Mount electrolytic capacitor with outstanding electrical performance and high energy storage capability. The device has a polarized all-welded design, tinned copper wire leads, and a negative pole connected to the case. The PEV227's winding is housed in a cylindrical aluminum can with a high purity aluminum lid and high quality rubber gasket. Low ESR is the result of a low resistive electrolyte/paper system and an all-welded design. Thanks to its mechanical robustness, the PEV227 is suitable for use in mobile and aircraft installations, with operation up to +150°C. KEMET's automotive grade capacitors meet the demanding Automotive Electronics Council's AEC−Q200 qualification requirements.

Applications

The KEMET PEV227 is a new generation of Ultra-High CV Surface-Mount electrolytic capacitors. It is designed for automotive applications with extremely high demands.

Benefits

- Surface Mount Device
- AEC−Q200 automotive qualified
- Up to 2,000 hours at +150°C derated voltage
- Up to 8,400 hours at +125C
- Ultra-High CV
- Extremely high ripple current
- Up to 21 ARMS ripple current, continuous load
- ESR stability over lifetime
- High vibration resistance (without clamping)
- Polarized all-welded design
- Outstanding electrical performance

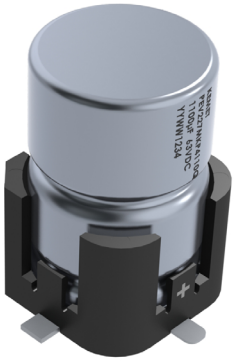

Part Number System

PEV227	H	KL	432	0	M	E4
Series	Rated Voltage (VDC)	Size Code	Capacitance Code (µF)	Version	Capacitance Tolerance	Packaging
Radial Crown SMD Aluminum Electrolytic	H = 25 K = 40 M = 63 N = 80 P = 100	See Dimension Table	The last two digits represent significant figures. The first digit indicates the total number of digits.	0 = Standard	Q = -10 + 30% M = ±20%	E4 = Tray

Downloaded from Arrow.com.

Performance Characteristics

Item	Performance Characteristics		
Capacitance Range	300 – 6,2000µF		
Rated Voltage	25 – 100 VDC		
Operating Temperature	−40 to +125°C (−40 to +150°C at derated voltage)		
Capacitance Tolerance	−10/+30%, (±20% select values) at 100 Hz/+20°C		
Operational Lifetime	D (mm)	Rated voltage, +125°C (hours) (Without ripple current)	Derated voltage, +150°C (hours)
	16	6,300	1,500
	18	8,400	2,000
Shelf Life	5,000 hours at +105°C or 10 years at +40°C 0 VDC		
Leakage Current	I = 0.003 CV + 4.0 (µA)		
	C = rated capacitance (µF), V = rated voltage (VDC). Voltage applied for 5 minutes at +20°C.		
Vibration Test Specifications	Procedure		Requirements
	1.5 mm displacement amplitude or 20 g maximum acceleration. Vibration applied for three 22-hour sessions at 10 – 2,000 Hz (without clamping).		No leakage of electrolyte or other visible damage. Deviations in capacitance from initial measurements must not exceed: Δ C/C < 5%
Standards	IEC 60384–4 long life grade 40/125/56, AEC–Q200		

Compensation Factor of Ripple Current (RC) vs. Frequency

Frequency	100 Hz	300 Hz	1 kHz	5 kHz	100 kHz
Coefficient	0.35	0.57	0.80	1.00	1.04

Test Method & Performance

Endurance Life Test	
Conditions	Performance
Temperature	+150°C
Test Duration	1,500 hours (D = 16 mm)
	2,000 hours (D = 18 mm)
Ripple Current	Maximum ripple current specified in table
Voltage	The sum of DC voltage and the peak AC voltage must not exceed the rated voltage of the capacitor
Performance	**The following specifications will be satisfied when the capacitor is tested at +20°C:**
Capacitance Change	Within 15% of the initial value
Equivalent Series Resistance	≤ 2x initial value (typically ≤ 1.3x at 90% of the lifetime)
Leakage Current	Does not exceed leakage current limit

Downloaded from Arrow.com.

Dimensions – Millimeters

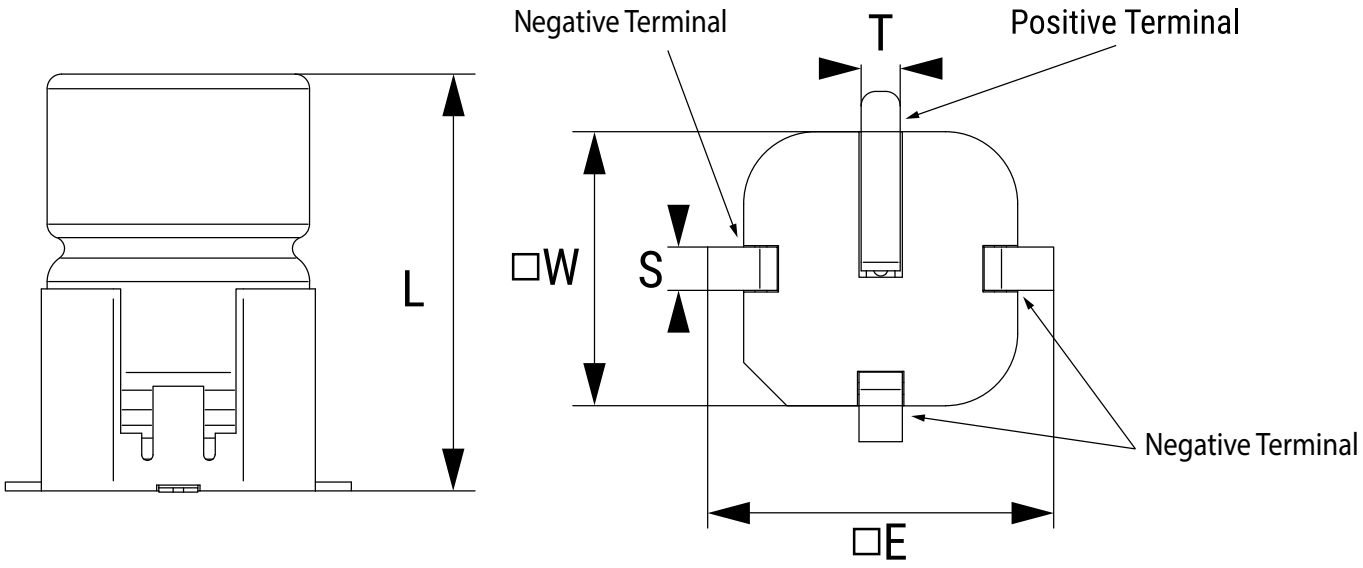

Size Code	Dimensions in mm					Approximate Weight Grams
	D ±0.5	L ±1.0	E ±0.5	S ±0.3	T ±0.3	
KL	16	28.9	22.5	3.0	2.5	10
KP	16	36.9	22.5	3.0	2.5	13
LL	18	28.9	24.5	3.0	2.5	13
LP	18	36.9	24.5	3.0	2.5	16

Note: Terminal coplanarity ≤ 200 µm

Ordering Options Table

Packaging Kind	Packaging Code
Standard Packaging Option	
Tray	E4

Downloaded from Arrow.com.

Shelf Life

The capacitance, ESR and impedance of a capacitor will not change significantly after extended storage periods, however, the leakage current will very slowly increase. KEMET products are particularly stable and allow a shelf life in excess of ten years at 40°C. See sectional specification under each product for specific data.

Reliability

Estimated field failure rate: ≤ 0.15 ppm (Failures per year/produced number of capacitors per year)
The expected failure rate for this capacitor range is based on field experience for capacitors with structural similarity.

Environmental Compliance

All Part Numbers in this datasheet are Reach and RoHS compliant and Halogen-Free.

As an environmentally conscious company, KEMET is working continuously with improvements concerning the environmental effects of both our capacitors and their production.

In Europe (RoHS Directive) and in some other geographical areas such as China, legislation has been put in place to prevent the use of some hazardous materials, such as lead (Pb), in electronic equipment. All products in this catalog are produced to help our customers' obligations to guarantee their products and fulfill these legislative requirements. The only material of concern in our products has been lead (Pb), which has been removed from all designs to fulfill the requirement of containing less than 0.1% of lead in any homogeneous material.

KEMET will closely follow any changes in legislation world wide and makes any necessary changes in its products, whenever needed. Some customer segments such as medical, military, and automotive electronics may still require the use of lead in electrode coatings. To clarify the situation and distinguish products from each other, a special symbol is used on the packaging labels for RoHS compatible capacitors.

Due to customer requirements, there may appear additional markings such as lead-free (LF) or lead-free wires (LFW) on the label.

Downloaded from Arrow.com.

Table 1 – Ratings & Part Number Reference

Rated Voltage 125°C	De-Rated Voltage 150°C	Rated Capacitance	Size Code	Case Size	Ripple Current					ESR			Part Number
					Maximum			Rated	Maximum (Reduced Voltage)	Maximum			
(VDC)	(VDC)	100 Hz 20°C (µF)		Ø x L (mm)	≥ 5 kHz 125°C (A)[1]	≥ 5 kHz 140°C (A)[2]	≥ 5 kHz 150°C (A)[2]	≥ 5 kHz 125°C (A)[3]	≥ 5 kHz 125°C (A)[4]	100 Hz 20°C (mΩ)	100 kHz 20°C (mΩ)	5–100 kHz 125–150°C (mΩ)	
25	18	3,200	KL	16 x 29	17.2	10.9	4.9	6.2	7.8	49	32	12.1	PEV227HKL4320ME4
25	18	4,600	KP	16 x 37	19.3	12.2	5.5	7.4	9.3	35	23	9.6	PEV227HKP4460ME4
25	18	4,300	LL	18 x 29	19.4	12.3	5.5	7.0	8.9	37	24	10.4	PEV227HLL4430QE4
25	18	6,200	LP	18 x 37	21.6	13.6	6.1	8.3	10.5	27	18	8.4	PEV227HLP4620QE4
40	32	1,500	KL	16 x 29	16.8	10.6	4.8	6.0	7.6	67	32	12.6	PEV227KKL4150ME4
40	32	2,200	KP	16 x 37	19.0	12.0	5.4	7.2	9.1	47	23	9.9	PEV227KKP4220ME4
40	32	2,100	LL	18 x 29	19.0	12.0	5.4	6.9	8.7	49	24	10.8	PEV227KLL4210QE4
40	32	3,000	LP	18 x 37	21.2	13.4	6.0	8.2	10.4	35	18	8.7	PEV227KLP4300QE4
63	54	780	KL	16 x 29	12.9	8.2	3.7	4.6	5.9	107	45	21.3	PEV227MKL3780QE4
63	54	1,100	KP	16 x 37	14.9	9.4	4.2	5.7	7.2	76	32	16	PEV227MKP4110QE4
63	54	1,100	LL	18 x 29	15.2	9.6	4.3	5.5	6.9	77	33	16.9	PEV227MLL4110QE4
63	54	1,600	LP	18 x 37	17.3	11.0	4.9	6.7	8.5	55	24	13	PEV227MLP4160QE4
80	63	520	KL	16 x 29	12.2	7.7	3.5	4.5	5.6	150	62	24	PEV227NKL3520QE4
80	63	750	KP	16 x 37	14.1	8.9	4.0	5.5	6.8	105	44	17.9	PEV227NKP3750QE4
80	63	750	LL	18 x 29	14.5	9.1	4.1	5.5	6.8	106	45	18.7	PEV227NLL3750QE4
80	63	1,100	LP	18 x 37	16.6	10.5	4.7	6.6	8.2	74	32	14.2	PEV227NLP4110QE4
100	83	300	KL	16 x 29	10.9	6.9	3.1	3.8	4.8	257	118	29.6	PEV227PKL3300QE4
100	83	430	KP	16 x 37	12.7	8.1	3.6	4.8	6.1	180	83	21.7	PEV227PKP3430QE4
100	83	430	LL	18 x 29	13.1	8.3	3.7	4.6	5.8	181	84	22.5	PEV227PLL3430QE4
100	83	620	LP	18 x 37	15.2	9.6	4.3	5.7	7.2	126	59	16.8	PEV227PLP3620QE4

[1] Capacitor-mounted with low thermal resistance path (heat-sink).
[2] Valid for capacitor supplied with reduced DC voltage, capacitor-mounted with low thermal resistance path.
[3] Continuous operation at Natural Convection (Ø18, 4,000h; Ø16, 3000h)
[4] Valid for capacitor supplied with reduced DC voltage. Continuous operation at Natural Convection. Reduced life (Ø18, 2000h; Ø16, 1500h)

Marking

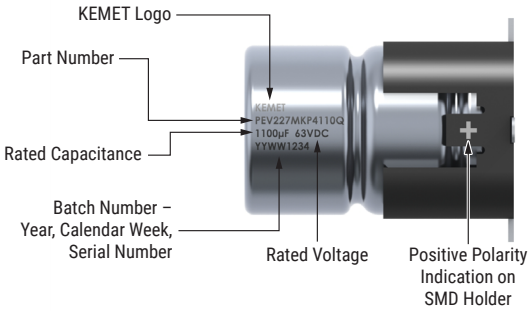

Construction

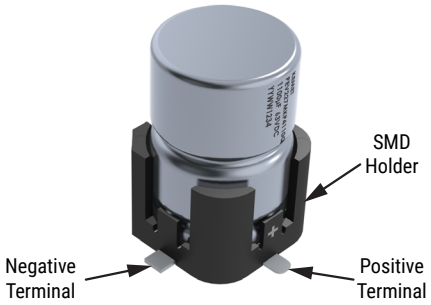

Downloaded from Arrow.com.

Construction cont.

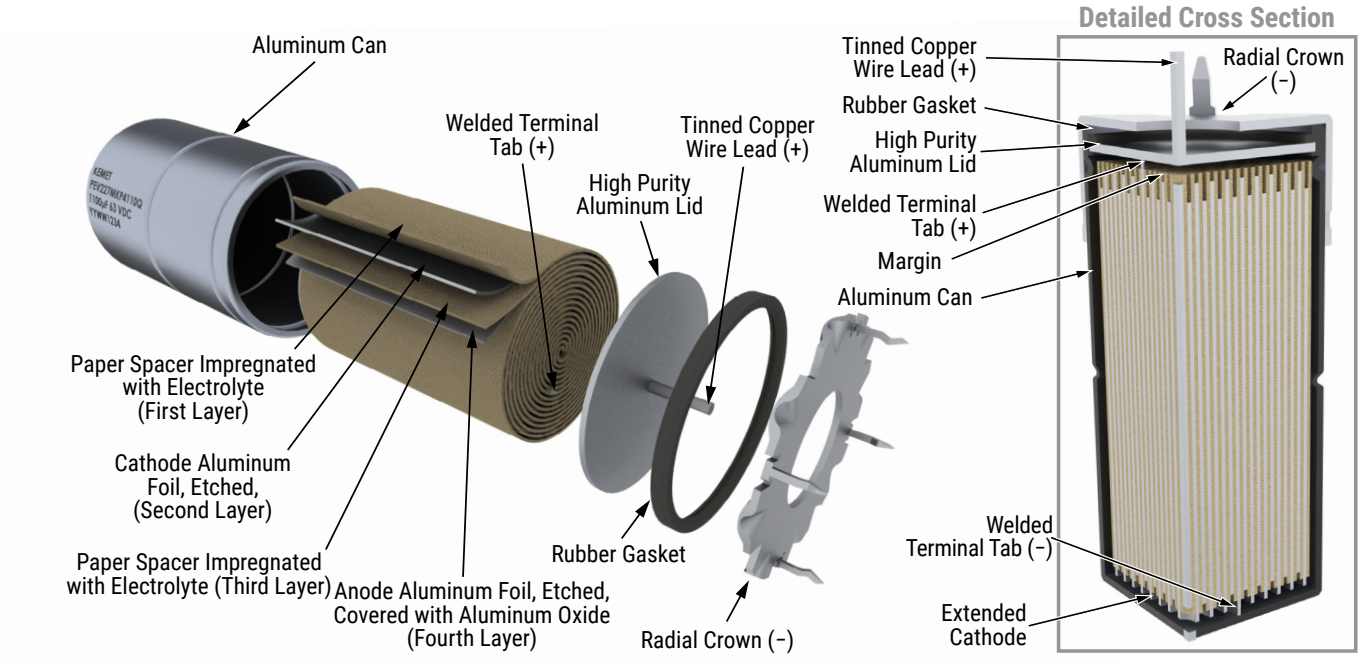

Landing Pad – Millimeters

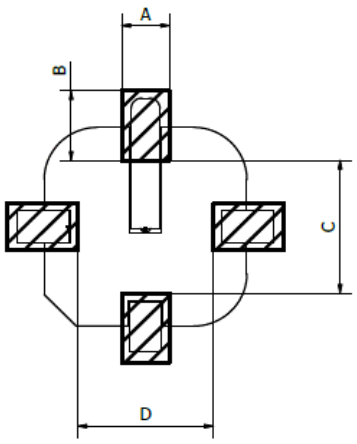

Size Code	A	B	C	D
KL, KP	4.5	6.65	12.7	12.7
LL, LP	4.5	6.65	14.7	14.7
Units in mm				

Downloaded from Arrow.com.

Reflow Soldering

The soldering conditions should be within the specified conditions below:

- Vapor heat transfer systems are not recommended.
- The system should be thermal, such as infra-red radiation or hot blast.
- Observe the soldering conditions as shown below.
- Do not exceed these limits and avoid repeated reflowing.

Time Period	Preheating	T1	T2	T3
Temperature (°C)	150 – 180	≥ 200	≤ 230	≤ 240
Time (seconds)		60 – 180	≤ 40	≤ 20
Reflow can be performed per the above parameters up to 2x				

The described re-flow profile corresponds to AEC Q-200 [condition J] - resistance to soldering heat.

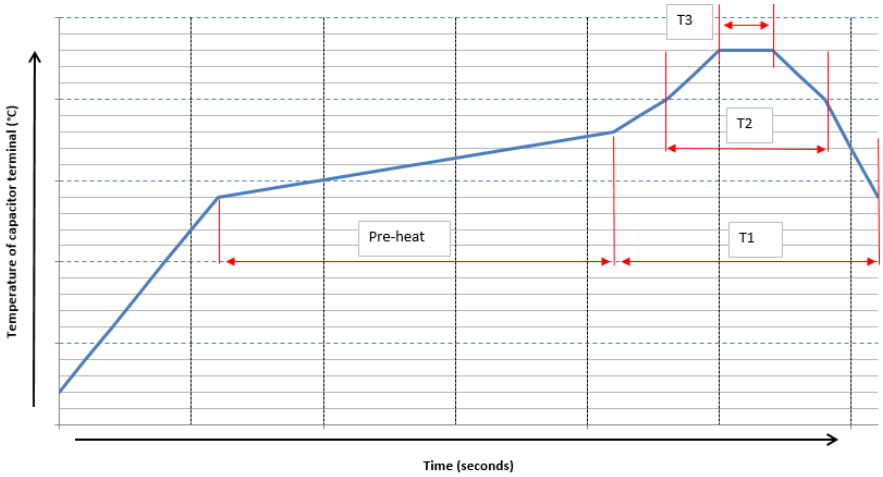

Downloaded from Arrow.com.

Construction Data

The manufacturing process begins with the anode foil being electrochemically etched to increase the surface area and then "formed" to produce the aluminum oxide layer. Both the anode and cathode foils are then interleaved with absorbent paper and wound into a cylinder. During the winding process, aluminum tabs are attached to each foil to provide the electrical contact.

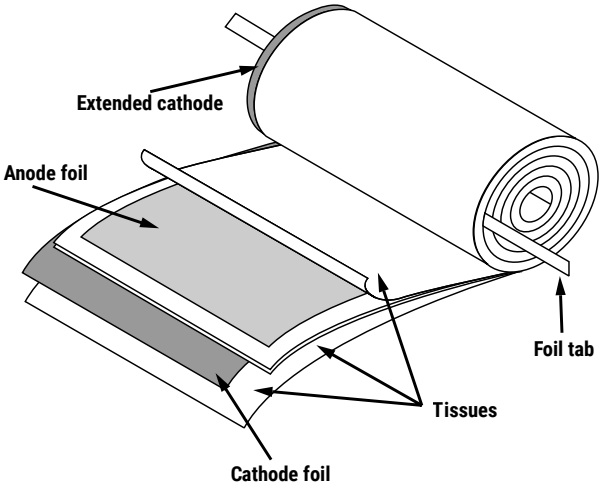

The winding is assembled to the capacitor Al-can and to the Al-lid. The can is filled with electrolyte and the winding is impregnated during a vacuum treatment. The capacitor is sealed. Throughout the process, all materials inside the housing must be maintained at the highest purity and be compatible with the electrolyte.

Each capacitor is aged and tested before being packed. The purpose of aging is to repair any damage in the oxide layer and thus reduce the leakage current to a very low level. Aging is carried out at elevated temperature and is accomplished by applying voltage to the device while carefully controlling the supply current. The process takes between 2 and 20 hours, depending on voltage rating.

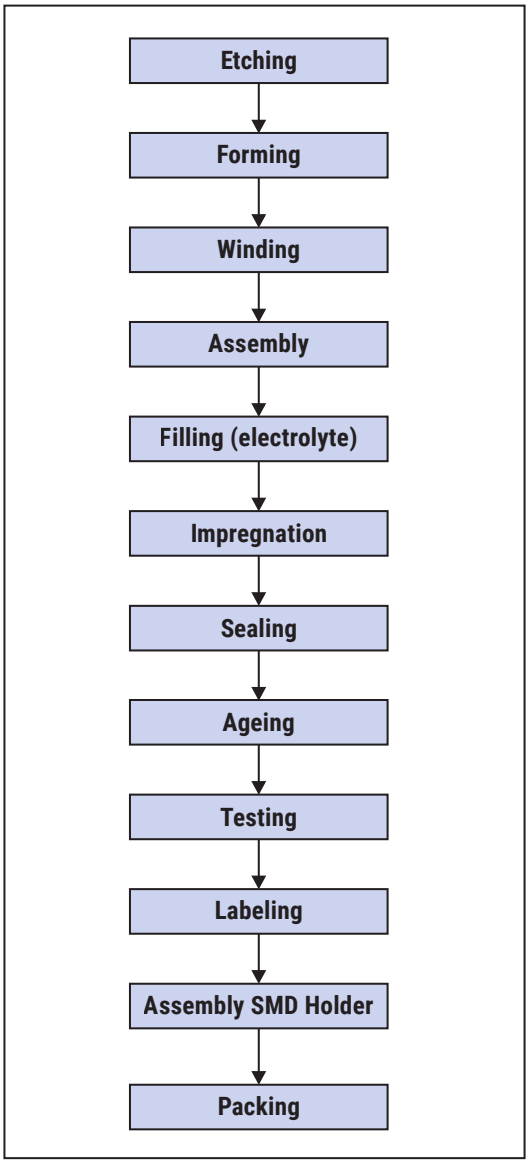

Damage to the oxide layer can occur due to a variety of reasons:

- Slitting of the anode foil after forming
- Attaching the tabs to the anode foil
- Minor mechanical damage caused during winding

The following tests are applied for each individual capacitor.

Electrical:

- Leakage current
- Capacitance
- ESR
- Tan Delta

Mechanical/Visual:

- Pull strength test of wire terminals
- Print detail
- Box labels
- Packaging, including packed quantity

Downloaded from Arrow.com.

KEMET Electronics Corporation Sales Offices

For a complete list of our global sales offices, please visit https://www.yageogroup.com/SalesResources/SalesOffices

Disclaimer

YAGEO Corporation and its affiliates do not recommend the use of commercial or automotive grade products for high reliability applications or manned space flight.

All product specifications, statements, information and data (collectively, the "Information") in this datasheet are subject to change. The customer is responsible for checking and verifying the extent to which the Information contained in this publication is applicable to an order at the time the order is placed. All Information given herein is believed to be accurate and reliable, but it is presented without guarantee, warranty, or responsibility of any kind, expressed or implied.

Statements of suitability for certain applications are based on KEMET Electronics Corporation's ("KEMET") knowledge of typical operating conditions for such applications, but are not intended to constitute – and KEMET specifically disclaims – any warranty concerning suitability for a specific customer application or use. The Information is intended for use only by customers who have the requisite experience and capability to determine the correct products for their application. Any technical advice inferred from this Information or otherwise provided by KEMET with reference to the use of KEMET's products is given gratis, and KEMET assumes no obligation or liability for the advice given or results obtained.

Although KEMET designs and manufactures its products to the most stringent quality and safety standards, given the current state of the art, isolated component failures may still occur. Accordingly, customer applications which require a high degree of reliability or safety should employ suitable designs or other safeguards (such as installation of protective circuitry or redundancies) in order to ensure that the failure of an electrical component does not result in a risk of personal injury or property damage.

Although all product–related warnings, cautions and notes must be observed, the customer should not assume that all safety measures are indicated or that other measures may not be required.

KEMET requires its products to be packaged and shipped on pallets. This is because KEMET's products are specifically designed to be packed onto pallets during shipment. If for any reason, the products are removed from pallets by the shipping party and shipped to the end customer, then additional external protection is required. In this instance, an external box with two carton layers and an upwards orientation sticker must be used by the shipping party, with the empty space filled with filling material, and afterwards sealing the box. If this packing and packaging guideline is not followed by the shipping party, the shipping party, and not KEMET, will be held responsible for any packaging, packing and/or product damages upon delivery of the products to the end customer. KEMET hereby disclaims any liability for damages to the products or otherwise that have been, or threaten to be, inflicted, result from or are in any way related to the packaging, packing or damage by the shipping party in contravention of the packing and packaging guidelines herein.

KEMET is a registered trademark of KEMET Electronics Corporation.

Downloaded from Arrow.com.