We connect and protect

Plug-In Unit U-Profile Front Panel for IEL, IET, Type 2 Handle 3 U, 4 HP, 2.5 mm, Al, Front Anodized, Rear Conductive

CATALOG NUMBER

30848-312

Downloaded from Arrow.com.

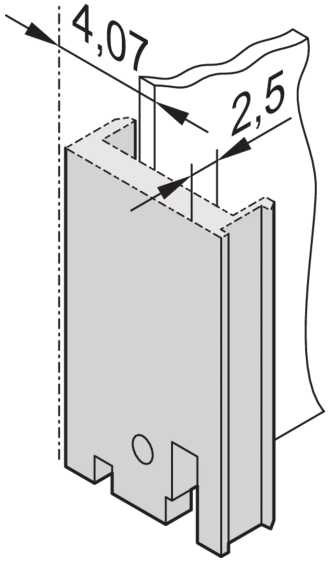

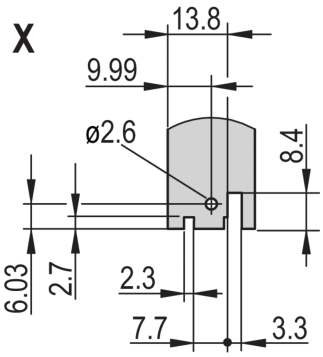

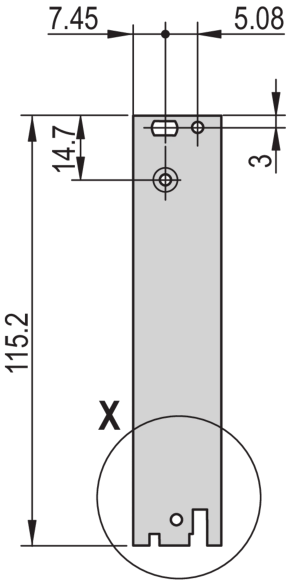

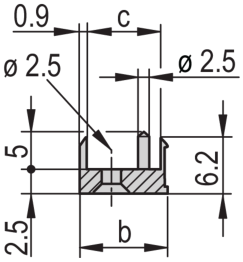

U-Profile front panel can be shielded with a textile gasket. It can be combined with the IEL and IET or the type 2 handle in trapezoid form.

Downloaded from Arrow.com.

CERTIFICATIONS

RoHS COMPLIANT

FEATURES

For IEL/IET/Trapeziform Type 2 handle

Al extrusion, 2.5 mm, front anodized, rear conductive

U-profile, shieldable with textile EMC gasket

Front panel, 3 U, for front mounting

Manufacturing process causes various surface structures to appear between 4 to 12 HP and 14 to 16 HP

Stainless steel alignment pin pressed-in

PRODUCT ATTRIBUTES

Rack Width: 4HP

Package Quantity: 1

Accessory Type: Front panel

Handle Type: IEL; IET; Trapezoid, Type 2

Mounting: Screw-on Front

Gasket Type: Textile EMC

Front Finish: Anodized

Rear Finish: Conductive

Treated Edges: No

Complies With: IEC 60297-3-102; IEEE 1101.10; IEC 60297-3-103; IEEE 1101.1/11

EMC Shielding: No (Retrofittable)

Finish: Anodized; Passivated

Material: Aluminum

Product Type: Front Panel

Rack Height: 3U

Type: Front Panel for Handle (PIU)

Net Weight: 0.018kg

ADDITIONAL PRODUCT DETAILS

Please order EMC profile seal separately.

Please take into consideration that deliveries may be carried out in the stated SPQs (SPQ, e.g. 5 pieces, 10 pieces, 50 pieces, etc.). Differing order quantities (e.g. 2 pieces) may be changed to the next possible delivery quantity = Standard Pack Quantity.

Downloaded from Arrow.com.

DIAGRAMS

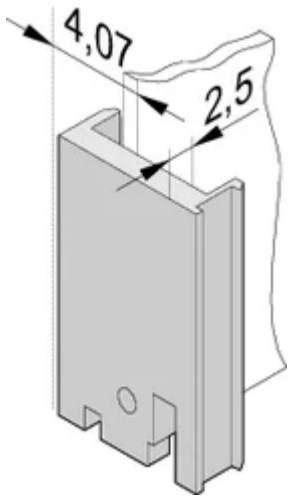

WARNING

nVent products shall be installed and used only as indicated in nVent's product instruction sheets and training materials. Instruction sheets are available at www.nvent.com and from your nVent customer service representative. Improper installation, misuse, misapplication or other failure to completely follow nVent's instructions and warnings may cause product malfunction, property damage, serious bodily injury and death and/or void your warranty.

North America
All locations
+1.763.422.2661
Chat with us:
nvent.com/schroff

Europe
Straubenhardt, Germany
+49.7082.794.0
Betschdorf, France
+33.3.88.90.64.90
Warsaw, Poland
+48.22.209.98.35
Assago, Italy
+39.02.932.7141
Chat with us:
nvent.com/schroff

Asia
Shanghai, China
+86.21.2412.6943
Qingdao, China
+86.532.8771.6101
Singapore
+65.6768.5800
Shin-Yokohama, Japan
+81.45.476.0271
Chat with us:
nvent.com/schroff

Middle East & India
Dubai, United Arab Emirates
+971.4.378.1700
Bangalore, India
+91.80.6715.2001
Istanbul, Turkey
+90.216.250.7374
Chat with us:
nvent.com/schroff

Our powerful portfolio of brands:

CADDY ERICO HOFFMAN ILSCO SCHROFF TRACHTE

©2026 nVent. All nVent marks and logos are owned or licensed by nVent Services GmbH or its affiliates. All other trademarks are the property of their respective owners. nVent reserves the right to change specifications without notice.

This document is system-generated.

Downloaded from Arrow.com.