REVISIONS

P	LTR	DESCRIPTION	DATE	DWN	APVD
	B	Drawing Creation	17/01/2023	WLA	-

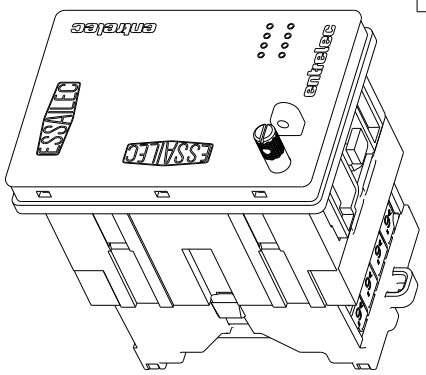

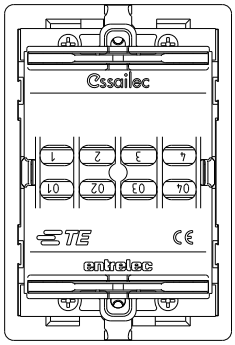

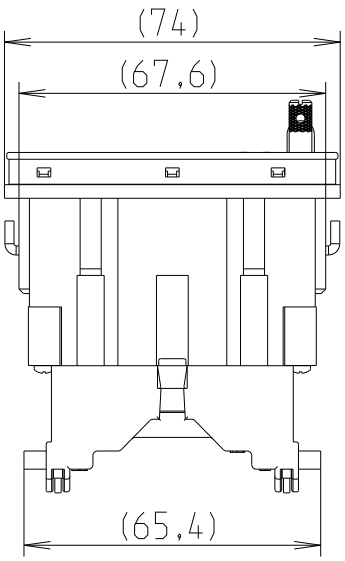

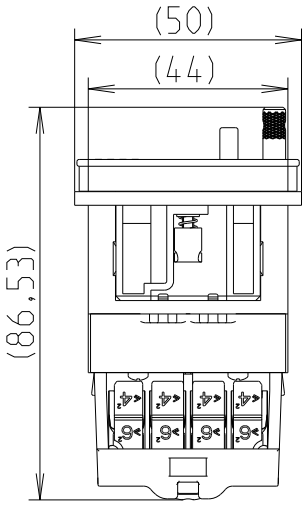

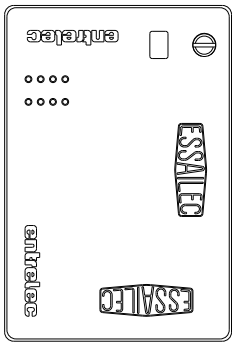

© 2022 TE Connectivity. All Rights Reserved.

DIMENSIONS: mm

TOLERANCES UNLESS OTHERWISE SPECIFIED:

0 PLC	±
1 PLC	±0,1
2 PLC	±0,01
3 PLC	±0,001
4 PLC	±0,0001
ANGLES	±

DWN 17-Jan-23 02:46:45 PM Lulla, Walter

CHK -

APVD -

PRODUCT SPEC -

APPLICATION SPEC -

WEIGHT 171,461

MATERIAL -

FINISH -

TE Connectivity

NAME TC-E-VA-2-2-SAFE
1SNA566018R0000

SIZE	CAGE CODE	DRAWING NO	RESTRICTED TO
A4	00779	C-1SNP300343-0130	-

CUSTOMER DRAWING

SCALE 3:5

SHEET 1 OF 1

REV B

1469-35 (3/13)

Downloaded from Arrow.com.