TOLERANCE UNLESS OTHERWISE SPECIFIED	
0-10	±0.20
10-30	±0.30
30-100	±0.40

THIS IS A C.A.D. GENERATED DRAWING
DO NOT MAKE MANUAL REVISIONS TO MASTER.

ISSUE NUMBER	
ORIGINAL	1
UPDATE PAGE 2 AVAILIBILITY J.L. APR.11/2024	2

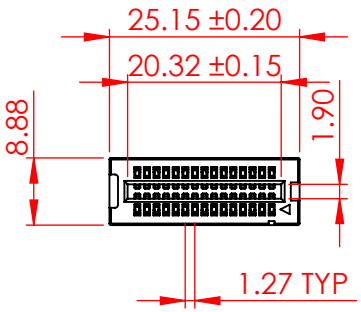

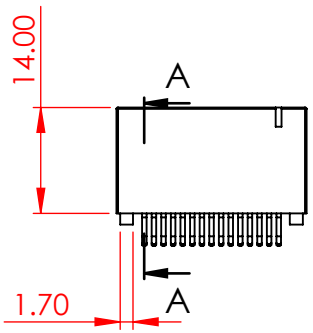

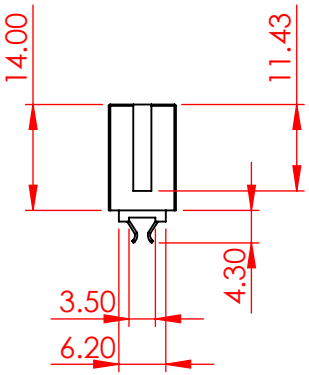

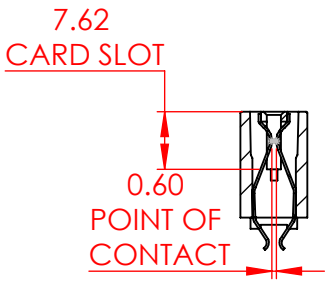

SECTION A-A

SPECIFICATIONS:

MATERIAL:	GLASS REINFORCED THERMOPLASTIC, PA66
CONTACT:	COPPER ALLOY
PLATING:	15µ" GOLD PLATING ON CONTACT AREA, TIN PLATING ON SOLDERING AREA

ELECTRICAL

VOLTAGE RATING:	250 VAC RMS
CURRENT RATING:	1A
DIELECTRIC WITHSTANDING VOLTAGE:	500VAC RMS 60Hz FOR 60s
INSULATION RESISTANCE:	1000 MEGA OHMS MIN AT 500VDC
CONTACT RESISTANCE:	30 mOHMS MAX

MECHANICAL

RETENTION FORCE:	460g MIN PER CONTACT
INSERTION FORCE:	230g MAX PER CONTACT PAIR
WITHDRAWAL FORCE:	15g MIN PER CONTACT PAIR

ENVIRONMENTAL

TEMPERATURE RANGE:	-55°C TO +85°C

RoHS COMPLIANT

THIS SERIES FULLY CONFORMS TO THE EUROPEAN UNION DIRECTIVES 2011/65/EU FOR RoHS COMPLIANCY.

302 SERIES CARD EDGE CONNECTOR

EDAC INC
TORONTO, ONTARIO
CANADA
YOUR CONNECTION TO QUALITY & SERVICE

THESE DRAWINGS AND SPECIFICATIONS ARE THE PROPERTY OF EDAC INC.,AND SHALL NOT BE REPRODUCED,OR COPIED OR USED AS THE BASIS FOR THE MANUFACTURE OR SALE OF APPARATUS WITHOUT WRITTEN PERMISSION.

ACAD REFERENCE NO.:	302 Assembly		UNIT: MM
DRAWN: J.L.		DATE: 06/06/23	
CHECKED: R.S.M.		DATE: 04/09/24	
SCALE: 1:1		SHEET 1 OF 2	
DRAWING NUMBER:	302-030-356-201		ISSUE 2
PART NUMBER:	302-030-356-201		

Downloaded from Arrow.com.

THIS IS A C.A.D. GENERATED DRAWING
DO NOT MAKE MANUAL REVISIONS TO MASTER.



ISSUE NUMBER
SEE PAGE 1

NO. OF POS.	CONTACT CODE 56
04	AVAILABLE
06	AVAILABLE
08	AVAILABLE
10	AVAILABLE
12	AVAILABLE
14	AVAILABLE
16	AVAILABLE
20	AVAILABLE
22	AVAILABLE
24	AVAILABLE
26	AVAILABLE
30	AVAILABLE
32	AVAILABLE
36	AVAILABLE
40	AVAILABLE
48	AVAILABLE
50	AVAILABLE
52	AVAILABLE
60	AVAILABLE
68	AVAILABLE
70	AVAILABLE
80	AVAILABLE
100	AVAILABLE
110	AVAILABLE
120	AVAILABLE
124	AVAILABLE

302-030-356-201
- MOUNTING CODE
- CONTACT CODE

RoHS COMPLIANT

THIS SERIES FULLY CONFORMS TO THE EUROPEAN UNION DIRECTIVES 2011/65/EU FOR RoHS COMPLIANCY.

302 SERIES CARD EDGE CONNECTOR

EDAC INC
TORONTO, ONTARIO
CANADA
YOUR CONNECTION TO QUALITY & SERVICE

THESE DRAWINGS AND SPECIFICATIONS ARE THE PROPERTY OF EDAC INC.,AND SHALL NOT BE REPRODUCED,OR COPIED OR USED AS THE BASIS FOR THE MANUFACTURE OR SALE OF APPARATUS WITHOUT WRITTEN PERMISSION.

ACAD REFERENCE NO.: 302 Assembly			UNIT: MM
DRAWN: J.L.		DATE: 06/06/23	
CHECKED: R.S.M.		DATE: 04/09/24	
SCALE: 3:2		SHEET 2 OF 2	
DRAWING NUMBER: 302-030-356-201			ISSUE 2
PART NUMBER: 302-030-356-201			

Downloaded from Arrow.com.