Overview

KEMET's High Reliability Alternative (HRA) series is designed, tested, and screened to meet the demands of higher reliability applications that require capacitance values not available in traditional MIL-SPEC products. By utilizing KEMET's patented base metal electrode (BME) technology, the X-Level HRA series provides up to five times the capacitance values as compared to what's available in MIL-PRF-32535 allowing for reduced board space and continuing the trend for miniaturization. These MLCCs are built using more robust designs as compared to Automotive and COTS grade along with voltage conditioning and lot-release testing.

KEMET's High Reliability Alternative (HRA) series is designed, tested, and screened to meet the demands of high-reliability applications that require capacitance values beyond those available in traditional MIL-SPEC products. Utilizing the same materials and process flow as MIL-PRF-32535, the X-Level HRA series leverages KEMET's patented base metal electrode (BME) technology to deliver up to five times the capacitance compared to MIL-PRF-32535-qualified parts. This increased capacitance enables board space reduction and supports continued miniaturization. KEMET's HRA series also feature more robust designs than Automotive and COTS grades and undergo voltage conditioning and lot-release testing to ensure enhanced reliability.

Benefits

- Patented BME technology
- X7R dielectric
- X-Level
  - Voltage conditioning and post-electrical testing per MIL–PRF–32535 (5% PDA)
  - Biased humidity testing (85°C/85%) per MIL–STD–202
  - Lot Release Testing
  - Lot Traceability
  - Single Lot Date Code Available
- −55°C to +125°C operating temperature range
- DC voltage ratings of 4 V, 6.3 V, 10 V, 16 V, 25 V, 50 V, and 100 V
- Capacitance offerings ranging from 39 pF to 22 µF
- Available capacitance tolerances of ±5%, ±10%, and ±20%
- Standard and Flexible Termination options
- 100% Matte Sn, SnPb (5% Pb minimum), and Gold (Au) 100µ in minimum plating finishes available

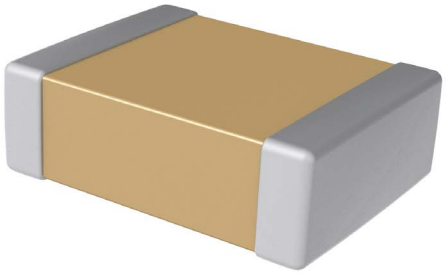

Applications

- Decoupling
- Bypass
- Filtering
- Transient voltage suppression

Downloaded from Arrow.com.

HRA Ordering Information

CHA	04	C	104	K	3	R	X	L	XXXX
Series	Case Size (L" x W")	Specification/ Series[2,3,4,5]	Capacitance Code (pF)	Capacitance Tolerance	Rated Voltage (V)	Dielectric	Failure Rate	Termination Finish[1]	Orientation and Packaging (Suffix/C-Spec)
CHA	04 = 0402 06 = 0603 08 = 0805 12 = 1206 13 = 1210 18 = 1812 21 = 2220	C = Standard X = Flexible Termination	2 single digits + number of zeros.	J = ±5% K = ±10% M = ±20%	7 = 4 V 9 = 6.3 V 8 = 10 V 4 = 16 V 3 = 25 V 5 = 50 V 1 = 100 V	R = X7R	X = X-Level	C = 100% Matte Sn L = SnPb (5% Pb min.) G = Gold (Au) 100µin min.	See "Packaging C-Spec Ordering Options Table"

[1] *Additional termination finish options may be available. Contact KEMET for details.*
[2] *Flex termination (X) not available in EIA 0402 case size.*
[3] *Standard termination (C) not available for EIA 1812 case size.*
[4] *Standard termination (C) not available for 100 V part types.*
[5] *Standard termination (C) not available in EIA 2220 case size for 50 V.*

Packaging C-Spec Ordering Options Table

Packaging Type	Packaging Ordering Code (C-Spec)
Standard Packaging (Waffle Tray)	Not required (Blank)
7" Tape & Reel	7189

Downloaded from Arrow.com.

Dimensions – Millimeters (Inches)

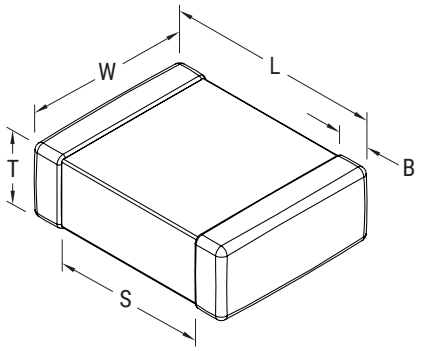

EIA Size Code	Metric Size Code	L Length	W Width	T Thickness	B Bandwidth	S Separation Minimum	Mounting Technique
Without Flexible Termination							
0402	1005	1.00 (0.040) ± 0.05 (0.002)	0.50 (0.020) ± 0.05 (0.002)	**See Table 2 for Thickness**	0.30 (0.012) ± 0.10 (0.004)	0.30 (0.012)	Solder Reflow Only
0603	1608	1.60 (0.063) ± 0.15 (0.006)	0.80 (0.032) ± 0.15 (0.006)		0.35 (0.014) ± 0.15 (0.006)	0.50 (0.020)	Solder Wave or Solder Reflow
0805	2012	2.00 (0.079) ± 0.20 (0.008)	1.25 (0.049) ± 0.20 (0.008)		0.50 (0.02) ± 0.25 (0.010)	0.70 (0.028)	
1206	3216	3.20 (0.126) ± 0.20 (0.008)	1.60 (0.063) ± 0.20 (0.008)		0.50 (0.02) ± 0.25 (0.010)	1.50 (0.060)	
1210	3225	3.20 (0.126) ± 0.20 (0.008)	2.50 (0.098) ± 0.20 (0.008)		0.50 (0.02) ± 0.25 (0.010)	1.50 (0.060)	Solder Reflow Only
2220	5650	5.70 (0.224) ± 0.40 (0.016)	5.00 (0.197) ± 0.40 (0.016)		0.60 (0.024) ± 0.35 (0.014)	3.50 (0.138)	
With Flexible Termination							
0603	1608	1.60 +0.2/−0.15 (0.063 +0.008/−0.006)	0.81 +0.2/−0.15 (0.032 +0.008/−0.006)	**See Table 2 for Thickness**	0.45 (0.018) ± 0.15 (0.006)	0.40 (0.016)	Solder Wave or Solder Reflow
0805[1]	2012	2.00 (0.079) ± 0.30 (0.012)	1.25 (0.049) ± 0.30 (0.012)		0.50 (0.02) ± 0.25 (0.010)	0.60 (0.024)	
1206	3216	3.30 (0.130) ± 0.40 (0.016)	1.60 (0.063) ± 0.35(0.013)		0.60 (0.024) ± 0.25 (0.010)	1.50 (0.060)	
1210	3225	3.30 (0.130) ± 0.40 (0.016)	2.60(0.102) ± 0.30(0.012)		0.60 (0.024) ± 0.25 (0.010)	1.50 (0.060)	Solder Reflow Only
1812	4532	4.50 (0.178) ± 0.40 (0.016)	3.20 (0.126) ± 0.30 (0.012)		0.70 (0.028) ± 0.35 (0.014)	2.30 (0.091)	
2220	5650	5.90 (0.232) ± 0.75 (0.030)	5.00 (0.197) ± 0.40 (0.016)		0.70 (0.028) ± 0.35 (0.014)	3.50 (0.138)	

[1] For Cap 2.2µF (6.3V and 4V) add 0.10 (0.004) to length tolerance dimension. (Flexible Termination option only)

Environmental Compliance

Lead (Pb)-free, RoHS, and REACH compliant without exemptions (excluding SnPb termination finish option).

Downloaded from Arrow.com.

Table 1A – Capacitance Range/Selection Waterfall (0402 – 0805 Case Sizes, Standard Termination)

Capacitance	Cap Code	Case Size			0402						0603						0805					
		Voltage Code (KEMET)			7	9	8	4	3	5	7	9	8	4	3	5	7	9	8	4	3	5
		Rated Voltage (VDC)			4	6.3	10	16	25	50	4	6.3	10	16	25	50	4	6.3	10	16	25	50
		Capacitance Tolerance			Product Availability																	
39 pF	390	J	K	M	BB	BB	BB	BB	BB	BB												
43 pF	430	J	K	M	BB	BB	BB	BB	BB	BB												
47 pF	470	J	K	M	BB	BB	BB	BB	BB	BB												
51 pF	510	J	K	M	BB	BB	BB	BB	BB	BB												
56 pF	560	J	K	M	BB	BB	BB	BB	BB	BB												
62 pF	620	J	K	M	BB	BB	BB	BB	BB	BB												
68 pF	680	J	K	M	BB	BB	BB	BB	BB	BB												
75 pF	750	J	K	M	BB	BB	BB	BB	BB	BB												
82 pF	820	J	K	M	BB	BB	BB	BB	BB	BB												
91 pF	910	J	K	M	BB	BB	BB	BB	BB	BB												
100 pF	101	J	K	M	BB	BB	BB	BB	BB	BB												
110 pF	111	J	K	M	BB	BB	BB	BB	BB	BB												
120 pF	121	J	K	M	BB	BB	BB	BB	BB	BB												
130 pF	131	J	K	M	BB	BB	BB	BB	BB	BB												
150 pF	151	J	K	M	BB	BB	BB	BB	BB	BB												
180 pF	181	J	K	M	BB	BB	BB	BB	BB	BB												
220 pF	221	J	K	M	BB	BB	BB	BB	BB	BB												
270 pF	271	J	K	M	BB	BB	BB	BB	BB	BB												
330 pF	331	J	K	M	BB	BB	BB	BB	BB	BB												
390 pF	391	J	K	M	BB	BB	BB	BB	BB	BB												
470 pF	471	J	K	M	BB	BB	BB	BB	BB	BB												
560 pF	561	J	K	M	BB	BB	BB	BB	BB	BB												
680 pF	681	J	K	M	BB	BB	BB	BB	BB	BB												
820 pF	821	J	K	M	BB	BB	BB	BB	BB	BB												
1000 pF	102	J	K	M	BB	BB	BB	BB	BB	BB	CF	CF	CF	CF	CF	CF						
1200 pF	122	J	K	M	BB	BB	BB	BB	BB	BB	CH	CH	CH	CH	CH	CH						
1500 pF	152	J	K	M	BB	BB	BB	BB	BB	BB	CH	CH	CH	CH	CH	CH						
1800 pF	182	J	K	M	BB	BB	BB	BB	BB	BB	CH	CH	CH	CH	CH	CH						
2200 pF	222	J	K	M	BB	BB	BB	BB	BB	BB	CH	CH	CH	CH	CH	CH						
2700 pF	272	J	K	M	BB	BB	BB	BB	BB	BB	CF	CF	CF	CF	CF	CF						
3300 pF	332	J	K	M	BB	BB	BB	BB	BB	BB	CF	CF	CF	CF	CF	CF						
3900 pF	392	J	K	M	BB	BB	BB	BB	BB	BB	CF	CF	CF	CF	CF	CF						
4700 pF	472	J	K	M	BB	BB	BB	BB	BB	BB	CF	CF	CF	CF	CF	CF						
5600 pF	562	J	K	M	BB	BB	BB	BB	BB	BB	CF	CF	CF	CF	CF	CF						
6800 pF	682	J	K	M	BB	BB	BB	BB	BB	BB	CF	CF	CF	CF	CF	CF						
8200 pF	822	J	K	M	BB	BB	BB	BB	BB	BB	CF	CF	CF	CF	CF	CF						
10000 pF	103	J	K	M	BB	BB	BB	BB	BB	BB	CF	CF	CF	CF	CF	CF	DN	DN	DN	DN	DN	DN
12000 pF	123	J	K	M	BB	BB	BB	BB	BB	BB	CF	CF	CF	CF	CF	CF	DN	DN	DN	DN	DN	DN
15000 pF	153	J	K	M	BB	BB	BB	BB	BB	BB	CF	CF	CF	CF	CF	CF	DN	DN	DN	DN	DN	DN
18000 pF	183	J	K	M	BB	BB	BB	BB	BB		CF	CF	CF	CF	CF	CF	DN	DN	DN	DN	DN	DN
22000 pF	223	J	K	M	BB	BB	BB	BB	BB		CF	CF	CF	CF	CF	CF	DN	DN	DN	DN	DN	DN
27000 pF	273	J	K	M	BB	BB	BB	BB			CF	CF	CF	CF	CF	CF	DN	DN	DN	DN	DN	DN
33000 pF	333	J	K	M	BB	BB	BB	BB			CF	CF	CF	CF	CF	CF	DP	DP	DP	DP	DP	DP
39000 pF	393	J	K	M	BB	BB	BB	BB			CF	CF	CF	CF	CF	CF	DP	DP	DP	DP	DP	DP
47000 pF	473	J	K	M	BB	BB	BB	BB			CF	CF	CF	CF	CF	CF	DP	DP	DP	DP	DP	DP
56000 pF	563	J	K	M	BB	BB					CF	CF	CF	CF	CF	CF	DP	DP	DP	DP	DP	DP
68000 pF	683	J	K	M	BB	BB					CF	CF	CF	CF	CF	CF	DP	DP	DP	DP	DP	DP
82000 pF	823	J	K	M	BB	BB					CF	CF	CF	CF	CF	CF	DP	DP	DP	DP	DP	DP
100000 pF	104	J	K	M	BB	BB					CF	CF	CF	CF	CF	CF	DG	DG	DG	DG	DG	DG
120000 pF	124	J	K	M							CF	CF	CF	CF	CF		DG	DG	DG	DG	DG	DG
150000 pF	154	J	K	M							CF	CF	CF	CF	CF		DG	DG	DG	DG	DG	DG
180000 pF	184	J	K	M							CF	CF	CF	CF			DP	DP	DP	DP	DP	DP
Capacitance	Cap Code	Rated Voltage			4	6.3	10	16	25	50	4	6.3	10	16	25	50	4	6.3	10	16	25	50
		Voltage Code			7	9	8	4	3	5	7	9	8	4	3	5	7	9	8	4	3	5
		Case Size			0402						0603						0805					

Downloaded from Arrow.com.

Table 1A – Capacitance Range/Selection Waterfall (0402 – 0805 Case Sizes, Standard Termination) cont.

Capacitance	Cap Code	Case Size			0402						0603						0805					
		Voltage Code (KEMET)			7	9	8	4	3	5	7	9	8	4	3	5	7	9	8	4	3	5
		Rated Voltage (VDC)			4	6.3	10	16	25	50	4	6.3	10	16	25	50	4	6.3	10	16	25	50
		Capacitance Tolerance			Product Availability																	
220000 pF	224	J	K	M							CF	CF	CF	CF			DP	DP	DP	DP	DP	DP
270000 pF	274	J	K	M							CF	CF	CF				DP	DP	DP	DP	DP	DP
330000 pF	334	J	K	M							CF	CF	CF				DP	DP	DP	DP	DP	DP
390000 pF	394	J	K	M							CF	CF					DP	DP	DP	DP	DP	DP
470000 pF	474	J	K	M							CF	CF					DG	DG	DG	DG	DG	DG
560000 pF	564	J	K	M													DG	DG	DG	DG	DG	
680000 pF	684	J	K	M													DG	DG	DG	DG	DG	
820000 pF	824	J	K	M													DG	DG	DG	DG		
1000000 pF	105	J	K	M													DG	DG	DG	DG		
1200000 pF	125	J	K	M													DE	DE	DE			
1500000 pF	155	J	K	M													DG	DG	DG			
1800000 pF	185	J	K	M													DG	DG				
2200000 pF	225	J	K	M													DG	DG				
Capacitance	Cap Code	Rated Voltage			4	6.3	10	16	25	50	4	6.3	10	16	25	50	4	6.3	10	16	25	50
		Voltage Code			7	9	8	4	3	5	7	9	8	4	3	5	7	9	8	4	3	5
		Case Size			0402						0603						0805					

Downloaded from Arrow.com.

Table 1B – Capacitance Range/Selection Waterfall (1206 – 2220 Case Sizes, Standard Termination)

Capacitance	Cap Code	Case Size			1206						1210						2220				
		Voltage Code (KEMET)			7	9	8	4	3	5	7	9	8	4	3	5	7	9	8	4	3
		Rated Voltage (VDC)			4	6.3	10	16	25	50	4	6.3	10	16	25	50	4	6.3	10	16	25
		Capacitance Tolerance			Product Availability																
82000 pF	823	J	K	M							FC	FC	FC	FC	FC	FC					
100000 pF	104	J	K	M	EB	EB	EB	EB	EB	EB	FC	FC	FC	FC	FC	FC	JC	JC	JC	JC	JC
120000 pF	124	J	K	M	EB	EB	EB	EB	EB	EB	FC	FC	FC	FC	FC	FC	JC	JC	JC	JC	JC
150000 pF	154	J	K	M	EC	EC	EC	EC	EC	EC	FC	FC	FC	FC	FC	FC	JC	JC	JC	JC	JC
180000 pF	184	J	K	M	EC	EC	EC	EC	EC	EC	FC	FC	FC	FC	FC	FC	JC	JC	JC	JC	JC
220000 pF	224	J	K	M	ED	ED	ED	ED	ED	ED	FC	FC	FC	FC	FC	FC	JC	JC	JC	JC	JC
270000 pF	274	J	K	M	EM	EM	EM	EM	EM	EM	FC	FC	FC	FC	FC	FC	JC	JC	JC	JC	JC
330000 pF	334	J	K	M	EM	EM	EM	EM	EM	EM	FE	FE	FE	FE	FE	FE	JC	JC	JC	JC	JC
390000 pF	394	J	K	M	EB	EB	EB	EB	EB	EB	FG	FG	FG	FG	FG	FG	JC	JC	JC	JC	JC
470000 pF	474	J	K	M	EB	EB	EB	EB	EB	EB	FG	FG	FG	FG	FG	FG	JC	JC	JC	JC	JC
560000 pF	564	J	K	M	EB	EB	EB	EB	EB	EB	FH	FH	FH	FH	FH	FH	JC	JC	JC	JC	JC
680000 pF	684	J	K	M	EC	EC	EC	EC	EC	EC	FH	FH	FH	FH	FH	FH	JD	JD	JD	JD	JD
820000 pF	824	J	K	M	ED	ED	ED	ED	ED	ED	FF	FF	FF	FF	FF	FF	JD	JD	JD	JD	JD
1000000 pF	105	J	K	M	ED	ED	ED	ED	ED	ED	FC	FC	FC	FC	FC	FC	JF	JF	JF	JF	JF
1200000 pF	125	J	K	M	EM	EM	EM	EM	EM		FC	FC	FC	FC	FC	FC	JF	JF	JF	JF	JF
1500000 pF	155	J	K	M	EM	EM	EM	EM	EM		FE	FE	FE	FE	FE	FE	JF	JF	JF	JF	JF
1800000 pF	185	J	K	M	EM	EM	EM	EH	EH		FG	FG	FG	FG	FG	FG	JF	JF	JF	JF	JF
2200000 pF	225	J	K	M	EM	EM	EM	EH	EH		FG	FG	FG	FG	FG	FG	JF	JF	JF	JF	JF
2700000 pF	275	J	K	M	EH	EH	EH	EH			FG	FG	FG	FH	FH	FH	JF	JF	JF	JF	JF
3300000 pF	335	J	K	M	EH	EH	EH	EH			FG	FG	FG	FM	FM	FM	JF	JF	JF	JF	JF
3900000 pF	395	J	K	M	EF	EF	EF				FK	FK	FK	FK	FK		JC	JC	JC	JC	
4700000 pF	475	J	K	M	EF	EF	EF				FS	FS	FS	FS	FS		JD	JD	JD	JD	
5600000 pF	565	J	K	M	EH	EH					FH	FH	FH	FH			JC	JC			
6800000 pF	685	J	K	M	EH	EH					FM	FM	FM	FM			JC	JC			
8200000 pF	825	J	K	M	EH	EH					FK	FK	FK				JC	JC			
10000000 pF	106	J	K	M	EH	EH					FS	FS	FS				JC	JC	JO	JO	JO
12000000 pF	126	J	K	M																	
15000000 pF	156	J	K	M													JO	JO	JO	JO	
18000000 pF	186	J	K	M																	
22000000 pF	226	J	K	M													JO	JO	JO	JO	
Capacitance	Cap Code	Rated Voltage			4	6.3	10	16	25	50	4	6.3	10	16	25	50	4	6.3	10	16	25
		Voltage Code			7	9	8	4	3	5	7	9	8	4	3	5	7	9	8	4	3
		Case Size			1206						1210						2220				

Downloaded from Arrow.com.

Table 1C – Capacitance Range/Selection Waterfall (0603 – 1206 Case Sizes, Flexible Termination)

Capacitance	Cap Code	Case Size			0603						0805							1206						
		Voltage Code (KEMET)			7	9	8	4	3	5	7	9	8	4	3	5	1	7	9	8	4	3	5	1
		Rated Voltage (VDC)			4	6.3	10	16	25	50	4	6.3	10	16	25	50	100	4	6.3	10	16	25	50	100
		Capacitance Tolerance			Product Availability																			
1000 pF	102	J	K	M	CJ	CJ	CJ	CJ	CJ	CJ														
1200 pF	122	J	K	M	CH	CH	CH	CH	CH	CH														
1500 pF	152	J	K	M	CH	CH	CH	CH	CH	CH														
1800 pF	182	J	K	M	CH	CH	CH	CH	CH	CH														
2200 pF	222	J	K	M	CH	CH	CH	CH	CH	CH														
2700 pF	272	J	K	M	CJ	CJ	CJ	CJ	CJ	CJ														
3300 pF	332	J	K	M	CJ	CJ	CJ	CJ	CJ	CJ														
3900 pF	392	J	K	M	CJ	CJ	CJ	CJ	CJ	CJ														
4700 pF	472	J	K	M	CJ	CJ	CJ	CJ	CJ	CJ														
5600 pF	562	J	K	M	CJ	CJ	CJ	CJ	CJ	CJ														
6800 pF	682	J	K	M	CJ	CJ	CJ	CJ	CJ	CJ														
8200 pF	822	J	K	M	CJ	CJ	CJ	CJ	CJ	CJ														
10000 pF	103	J	K	M	CJ	CJ	CJ	CJ	CJ	CJ	DR	DR	DR	DR	DR	DR	DR							
12000 pF	123	J	K	M	CJ	CJ	CJ	CJ	CJ	CJ	DR	DR	DR	DR	DR	DR	DR							
15000 pF	153	J	K	M	CJ	CJ	CJ	CJ	CJ	CJ	DR	DR	DR	DR	DR	DR	DR							
18000 pF	183	J	K	M	CJ	CJ	CJ	CJ	CJ	CJ	DR	DR	DR	DR	DR	DR	DR							
22000 pF	223	J	K	M	CJ	CJ	CJ	CJ	CJ	CJ	DR	DR	DR	DR	DR	DR	DD							
27000 pF	273	J	K	M	CJ	CJ	CJ	CJ	CJ	CJ	DR	DR	DR	DR	DR	DR	DD							
33000 pF	333	J	K	M	CJ	CJ	CJ	CJ	CJ	CJ	DD	DD	DD	DD	DD	DD	DD							
39000 pF	393	J	K	M	CJ	CJ	CJ	CJ	CJ	CJ	DD	DD	DD	DD	DD	DD	DD							
47000 pF	473	J	K	M	CJ	CJ	CJ	CJ	CJ	CJ	DD	DD	DD	DD	DD	DD	DG							
56000 pF	563	J	K	M	CJ	CJ	CJ	CJ	CJ	CJ	DD	DD	DD	DD	DD	DD	DG							
68000 pF	683	J	K	M	CJ	CJ	CJ	CJ	CJ	CJ	DD	DD	DD	DD	DD	DD								
82000 pF	823	J	K	M	CJ	CJ	CJ	CJ	CJ	CJ	DD	DD	DD	DD	DD	DD								
100000 pF	104	J	K	M	CJ	CJ	CJ	CJ	CJ	CJ	DG	DG	DG	DG	DG	DG		EQ	EQ	EQ	EQ	EQ	EQ	EL
120000 pF	124	J	K	M	CJ	CJ	CJ	CJ	CJ		DG	DG	DG	DG	DG	DG		EQ	EQ	EQ	EQ	EQ	EQ	EL
150000 pF	154	J	K	M	CJ	CJ	CJ	CJ	CJ		DG	DG	DG	DG	DG	DG		ER	ER	ER	ER	ER	ER	EL
180000 pF	184	J	K	M	CJ	CJ	CJ	CJ			DD	DD	DD	DD	DD	DD		ER	ER	ER	ER	ER	ER	
220000 pF	224	J	K	M	CJ	CJ	CJ	CJ			DD	DD	DD	DD	DD	DD		ES	ES	ES	ES	ES	ES	
270000 pF	274	J	K	M	CJ	CJ	CJ				DD	DD	DD	DD	DD	DD		EL	EL	EL	EL	EL	EL	
330000 pF	334	J	K	M	CJ	CJ	CJ				DD	DD	DD	DD	DD	DD		EL	EL	EL	EL	EL	EL	
390000 pF	394	J	K	M	CJ	CJ					DD	DD	DD	DD	DD	DD		EQ	EQ	EQ	EQ	EQ	EQ	
470000 pF	474	J	K	M	CJ	CJ					DG	DG	DG	DG	DG	DG		EQ	EQ	EQ	EQ	EQ	EQ	
560000 pF	564	J	K	M							DG	DG	DG	DG	DG			EQ	EQ	EQ	EQ	EQ	EQ	
680000 pF	684	J	K	M							DG	DG	DG	DG	DG			ER	ER	ER	ER	ER	ER	
820000 pF	824	J	K	M							DG	DG	DG	DG				ES	ES	ES	ES	ES	ES	
1000000 pF	105	J	K	M							DG	DG	DG	DG				ES	ES	ES	ES	ES	ES	
1200000 pF	125	J	K	M							DS	DS	DS					EL	EL	EL	EL	EL		
1500000 pF	155	J	K	M							DG	DG	DG					EL	EL	EL	EL	EL		
1800000 pF	185	J	K	M							DG	DG						EL	EL	EL	EL	EH		
2200000 pF	225	J	K	M							DG	DG						EL	EL	EL	EL	EH		
2700000 pF	275	J	K	M														EH	EH	EH	EH			
3300000 pF	335	J	K	M														EH	EH	EH	EH			
3900000 pF	395	J	K	M														EP	EP	EP				
4700000 pF	475	J	K	M														EP	EP	EP				
5600000 pF	565	J	K	M														EH	EH					
6800000 pF	685	J	K	M														EH	EH					
8200000 pF	825	J	K	M														EH	EH					
10000000 pF	106	J	K	M														EH	EH					
Capacitance	Cap Code	Rated Voltage			4	6.3	10	16	25	50	4	6.3	10	16	25	50	100	4	6.3	10	16	25	50	100
		Voltage Code			7	9	8	4	3	5	7	9	8	4	3	5	1	7	9	8	4	3	5	1
		Case Size			0402						0805							1206						

Downloaded from Arrow.com.

Table 1B – Capacitance Range/Selection Waterfall (1210 – 2220 Case Sizes, Flexible Termination)

Capacitance	Cap Code	Case Size			1210							1812							2220					
		Voltage Code (KEMET)			7	9	8	4	3	5	1	7	9	8	4	3	5	1	7	9	8	4	3	5
		Rated Voltage (VDC)			4	6.3	10	16	25	50	100	4	6.3	10	16	25	50	100	4	6.3	10	16	25	50
		Capacitance Tolerance			Product Availability																			
82000 pF	823	J	K	M	FQ	FQ	FQ	FQ	FQ	FQ	FN													
100000 pF	104	J	K	M	FQ	FQ	FQ	FQ	FQ	FQ	FQ	GB	GB	GB	GB	GB	GB	GB	JC	JC	JC	JC	JC	JC
120000 pF	124	J	K	M	FQ	FQ	FQ	FQ	FQ	FQ	FE	GB	GB	GB	GB	GB	GB	GB	JC	JC	JC	JC	JC	JC
150000 pF	154	J	K	M	FQ	FQ	FQ	FQ	FQ	FQ	FE	GB	GB	GB	GB	GB	GB	GB	JC	JC	JC	JC	JC	JC
180000 pF	184	J	K	M	FQ	FQ	FQ	FQ	FQ	FQ	FF	GB	GB	GB	GB	GB	GB	GB	JC	JC	JC	JC	JC	JC
220000 pF	224	J	K	M	FQ	FQ	FQ	FQ	FQ	FQ	FZ	GB	GB	GB	GB	GB	GB	GB	JC	JC	JC	JC	JC	JC
270000 pF	274	J	K	M	FQ	FQ	FQ	FQ	FQ	FQ	FU	GB	GB	GB	GB	GB	GB	GC	JC	JC	JC	JC	JC	JC
330000 pF	334	J	K	M	FE	FE	FE	FE	FE	FE	FU	GB	GB	GB	GB	GB	GB	GC	JC	JC	JC	JC	JC	JC
390000 pF	394	J	K	M	FZ	FZ	FZ	FZ	FZ	FZ		GB	GB	GB	GB	GB	GB	GE	JC	JC	JC	JC	JC	JC
470000 pF	474	J	K	M	FZ	FZ	FZ	FZ	FZ	FZ		GB	GB	GB	GB	GB	GB	GG	JC	JC	JC	JC	JC	JC
560000 pF	564	J	K	M	FU	FU	FU	FU	FU	FU		GB	GB	GB	GB	GB	GB	GG	JC	JC	JC	JC	JC	JD
680000 pF	684	J	K	M	FU	FU	FU	FU	FU	FU		GB	GB	GB	GB	GB	GB	GN	JD	JD	JD	JD	JD	JF
820000 pF	824	J	K	M	FF	FF	FF	FF	FF	FF		GB	GB	GB	GB	GB	GB	GS	JD	JD	JD	JD	JD	JF
1000000 pF	105	J	K	M	FQ	FQ	FQ	FQ	FQ	FQ		GB	GB	GB	GB	GB	GB	GO	JF	JF	JF	JF	JF	JL
1200000 pF	125	J	K	M	FQ	FQ	FQ	FQ	FQ	FQ		GG	GG	GG	GG	GG	GG		JF	JF	JF	JF	JF	JO
1500000 pF	155	J	K	M	FE	FE	FE	FE	FE	FE		GN	GN	GN	GN	GN	GN		JF	JF	JF	JF	JF	JO
1800000 pF	185	J	K	M	FZ	FZ	FZ	FZ	FZ	FZ		GN	GN	GN	GN	GN	GN		JF	JF	JF	JF	JF	
2200000 pF	225	J	K	M	FZ	FZ	FZ	FZ	FZ	FZ		GE	GE	GE	GE	GE	GE		JF	JF	JF	JF	JF	
2700000 pF	275	J	K	M	FZ	FZ	FZ	FU	FU	FU		GE	GE	GE	GE	GE	GE		JF	JF	JF	JF	JF	
3300000 pF	335	J	K	M	FZ	FZ	FZ	FM	FM	FM		GE	GE	GE	GE	GE	GE		JF	JF	JF	JF	JF	
3900000 pF	395	J	K	M	FK	FK	FK	FK	FK			GE	GE	GE	GE	GE			JC	JC	JC	JC		
4700000 pF	475	J	K	M	FS	FS	FS	FS	FS			GB	GB	GB	GK	GK			JD	JD	JD	JD		
5600000 pF	565	J	K	M	FU	FU	FU	FU											JC	JC				
6800000 pF	685	J	K	M	FM	FM	FM	FM											JC	JC				
8200000 pF	825	J	K	M	FK	FK	FK												JC	JC				
10000000 pF	106	J	K	M	FS	FS	FS					GK	GK	GK	GK				JC	JC	JO	JO	JO	
12000000 pF	126	J	K	M																				
15000000 pF	156	J	K	M															JO	JO	JO	JO		
18000000 pF	186	J	K	M																				
22000000 pF	226	J	K	M															JO	JO	JO	JO		
Capacitance	Cap Code	Rated Voltage			4	6.3	10	16	25	50	100	4	6.3	10	16	25	50	100	4	6.3	10	16	25	50
		Voltage Code			7	9	8	4	3	5	1	7	9	8	4	3	5	1	7	9	8	4	3	5
		Case Size			1210							1812							2220					

Downloaded from Arrow.com.

Table 2A – Chip Thickness/Tape & Reel Packaging Quantities - Standard Termination

Thickness Code	Case Size[1]	Thickness ± Range (mm)	Paper Quantity[1]		Plastic Quantity	
			7" Reel	13" Reel	7" Reel	13" Reel
BB	0402	0.50 ±0.05	10,000	50,000	0	0
CF	0603	0.80 ±0.07	4,000	15,000	0	0
CH	0603	0.85 ±0.07	4,000	10,000	0	0
DN	0805	0.78 ±0.10	0	0	4,000	15,000
DP	0805	0.90 ±0.10	0	0	4,000	15,000
DE	0805	1.00 ±0.10	0	0	2,500	10,000
DG	0805	1.25 ±0.15	0	0	2,500	10,000
EB	1206	0.78 ±0.10	0	0	4,000	10,000
EC	1206	0.90 ±0.10	0	0	4,000	10,000
ED	1206	1.00 ±0.10	0	0	2,500	10,000
EF	1206	1.20 ±0.15	0	0	2,500	10,000
EM	1206	1.25 ±0.15	0	0	2,500	8,000
EH	1206	1.60 ±0.20	0	0	2,000	8,000
FC	1210	0.90 ±0.10	0	0	4,000	10,000
FE	1210	1.00 ±0.10	0	0	2,500	10,000
FF	1210	1.10 ±0.10	0	0	2,500	10,000
FG	1210	1.25 ±0.15	0	0	2,500	10,000
FH	1210	1.55 ±0.15	0	0	2,000	8,000
FM	1210	1.70 ±0.20	0	0	2,000	8,000
FK	1210	2.10 ±0.20	0	0	2,000	8,000
FS	1210	2.50 ±0.30	0	0	1,000	4,000
JC	2220	1.10 ±0.15	0	0	1,000	4,000
JD	2220	1.30 ±0.15	0	0	1,000	4,000
JF	2220	1.50 ±0.15	0	0	1,000	4,000
JO	2220	2.40 ±0.15	0	0	500	2,000
Thickness Code	**Case Size[1]**	**Thickness ± Range (mm)**	**7" Reel**	**13" Reel**	**7" Reel**	**13" Reel**
			Paper Quantity[1]		**Plastic Quantity**	

Package quantity based on finished chip thickness specifications.

[1] If ordering using the 2mm Tape and Reel pitch option, the packaging quantity outlined in the table above will be doubled. This option is limited to EIA 0603 (1608 metric) case size devices. For more information regarding 2mm pitch option see "Tape & Reel Packaging Information".

Downloaded from Arrow.com.

Table 2B – Chip Thickness/Tape & Reel Packaging Quantities - Flexible Termination

Thickness Code	Case Size[1]	Thickness ±Range (mm)	Paper Quantity		Plastic Quantity	
			7" Reel	13" Reel	7" Reel	13" Reel
CJ	0603	0.80 ±0.15	4,000	15,000	0	0
CH	0603	0.85 ±0.07	4,000	10,000	0	0
DR	0805	0.78 ±0.20	0	0	4,000	10,000
DD	0805	0.90 ±0.10	0	0	4,000	10,000
DS	0805	1.00 ±0.20	0	0	2,500	10,000
DG	0805	1.25 ±0.15	0	0	2,500	10,000
EQ	1206	0.78 ±0.20	0	0	4,000	10,000
ER	1206	0.90 ±0.20	0	0	4,000	10,000
ES	1206	1.00 ±0.20	0	0	2,500	10,000
EP	1206	1.20 ±0.20	0	0	2,500	10,000
EL	1206	1.25 ±0.20	0	0	2,500	10,000
EH	1206	1.60 ±0.20	0	0	2,000	8,000
FN	1210	0.78 ±0.20	0	0	4,000	10,000
FQ	1210	0.90 ±0.20	0	0	4,000	10,000
FE	1210	1.00 ±0.10	0	0	2,500	10,000
FF	1210	1.10 ±0.10	0	0	2,500	10,000
FZ	1210	1.25 ±0.20	0	0	2,500	10,000
FU	1210	1.55 ±0.20	0	0	2,000	8,000
FM	1210	1.70 ±0.20	0	0	2,000	8,000
FK	1210	2.10 ±0.20	0	0	2,000	8,000
FS	1210	2.50 ±0.30	0	0	1,000	4,000
GB	1812	1.00 ±0.10	0	0	1,000	4,000
GC	1812	1.10 ±0.10	0	0	1,000	4,000
GE	1812	1.30 ±0.10	0	0	1,000	4,000
GG	1812	1.55 ±0.10	0	0	1,000	4,000
GK	1812	1.60 ±0.20	0	0	1,000	4,000
GN	1812	1.70 ±0.20	0	0	1,000	4,000
GS	1812	2.10 ±0.20	0	0	500	2,000
GO	1812	2.50 ±0.20	0	0	500	2,000
JC	2220	1.10 ±0.15	0	0	1,000	4,000
JD	2220	1.30 ±0.15	0	0	1,000	4,000
JF	2220	1.50 ±0.15	0	0	1,000	4,000
JL	2220	2.00 ±0.20	0	0	500	2,000
JO	2220	2.40 ±0.15	0	0	500	2,000
Thickness Code	**Case Size[1]**	**Thickness ± Range (mm)**	**7" Reel**	**13" Reel**	**7" Reel**	**13" Reel**
			Paper Quantity[1]		**Plastic Quantity**	

Package quantity based on finished chip thickness specifications.

Downloaded from Arrow.com.

Table 3– Chip Capacitor Land Pattern Design Recommendations per IPC–7351 (mm)

EIA Size Code	Metric Size Code	Density Level A: Maximum (Most) Land Protrusion					Density Level B: Median (Nominal) Land Protrusion					Density Level C: Minimum (Least) Land Protrusion				
		C	Y	X	V1	V2	C	Y	X	V1	V2	C	Y	X	V1	V2
0402	1005	0.50	0.72	0.72	2.20	1.20	0.45	0.62	0.62	1.90	1.00	0.40	0.52	0.52	1.60	0.80
0603	1608	0.90	1.15	1.10	4.00	2.10	0.80	0.95	1.00	3.10	1.50	0.60	0.75	0.90	2.40	1.20
0805	2012	1.00	1.35	1.55	4.40	2.60	0.90	1.15	1.45	3.50	2.00	0.75	0.95	1.35	2.80	1.70
1206	3216	1.60	1.35	1.90	5.60	2.90	1.50	1.15	1.80	4.70	2.30	1.40	0.95	1.70	4.00	2.00
1210	3225	1.60	1.35	2.80	5.65	3.80	1.50	1.15	2.70	4.70	3.20	1.40	0.95	2.60	4.00	2.90
1812	4532	2.15	1.60	3.60	6.90	4.60	2.05	1.40	3.50	6.00	4.00	1.95	1.20	3.40	5.30	3.70
2220	5650	2.75	1.70	5.50	8.20	6.50	2.65	1.50	5.40	7.30	5.90	2.55	1.30	5.30	6.60	5.60

Density Level A: *For low-density Product applications. Recommended for wave solder applications and provides a wider process window for reflow solder processes. KEMET only recommends wave soldering of EIA 0603, 0805 and 1206 case sizes.*
Density Level B: *For products with a moderate level of component density. Provides a robust solder attachment condition for reflow solder processes.*
Density Level C: *For high component density product applications. Before adapting the minimum land pattern variations the user should perform qualification testing based on the conditions outlined in IPC Standard 7351 (IPC-7351).*

Image below based on Density Level B for an EIA 1210 case size.

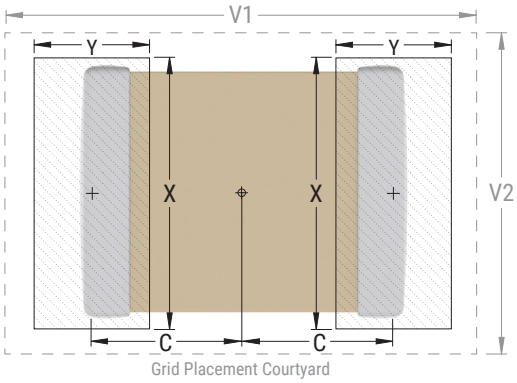

Downloaded from Arrow.com.

Soldering Process

Recommended Soldering Technique:

- Solder wave or solder reflow for EIA case sizes 0603, 0805 and 1206
- All other EIA case sizes are limited to solder reflow only

Recommended Reflow Soldering Profile:

KEMET's families of surface mount multilayer ceramic capacitors (SMD MLCCs) are compatible with wave (single or dual), convection, IR or vapor phase reflow techniques. Preheating of these components is recommended to avoid extreme thermal stress. KEMET's recommended profile conditions for convection and IR reflow reflect the profile conditions of the IPC/JSTD-020 standard for moisture sensitivity testing. These devices can safely withstand a maximum of three reflow passes at these conditions.

Profile Feature	Termination Finish	
	SnPb	100% Matte Sn
Preheat/Soak		
Temperature minimum (T_{Smin})	100°C	150°C
Temperature maximum (T_{Smax})	150°C	200°C
Time (t_s) from T_{Smin} to T_{Smax}	60 – 120 seconds	60 – 120 seconds
Ramp-up rate (T_L to T_P)	3°C/second maximum	3°C/second maximum
Liquidous temperature (T_L)	183°C	217°C
Time above liquidous (t_L)	60 – 150 seconds	60 – 150 seconds
Peak temperature (T_P)	235°C	260°C
Time within 5°C of maximum peak temperature (t_P)	20 seconds maximum	30 seconds maximum
Ramp-down rate (T_P to T_L)	6°C/second maximum	6°C/second maximum
Time 25°C to peak temperature	6 minutes maximum	8 minutes maximum

Note: All temperatures refer to the center of the package, measured on the capacitor body surface that is facing up during assembly reflow.

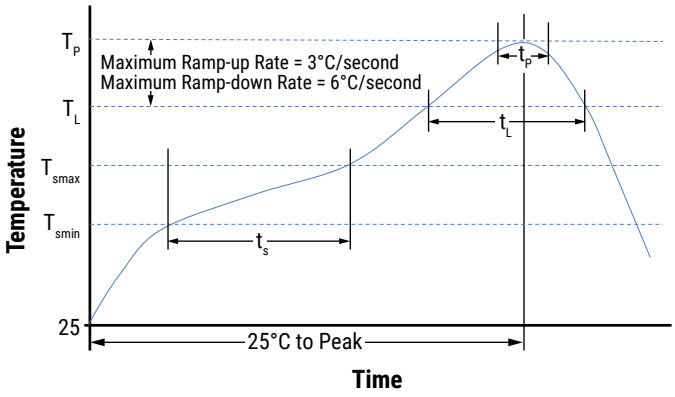

Downloaded from Arrow.com.

Table 4 – HRA Performance and Reliability: SMD Test Methods and Conditions

<table>
<tr><th>Test</th><th>Reference</th><th>Test Condition</th><th>Limits</th></tr>
<tr><td>Visual and Mechanical</td><td>KEMET Internal</td><td>No defects that may affect performance (10X)</td><td>Dimensions according KEMET Spec Sheet</td></tr>
<tr><td>Capacitance (Cap)</td><td>KEMET Internal</td><td>C ≤ 10µF 1 kHz ±50 Hz and 1.0 ±0.2 Vrms or 0.5 ±0.2 Vrms*
C > 10µF120 Hz ±10 Hz and 0.5 ±0.1 Vrms
* See part number specification sheet for voltage

Capacitance measurements (including tolerance) are indexed to a referee time of 48 or 1,000 hours
Please refer to a part number specification sheet for referee time details</td><td>Within Tolerance</td></tr>
<tr><td>Dissipation Factor (DF)</td><td>KEMET Internal</td><td>C ≤ 10µF
Frequency: 1 kHz ±50 Hz
Voltage*:1.0 ±0.2 Vrms, 0.5 ±0.2 Vrms,
C > 10µF
Frequency: 120 Hz ±10 Hz
Voltage: 0.5 ±0.1 Vrms
* See part number specification sheet for voltage</td><td>Within Specification
<table>
<tr><th>Voltage</th><th>Limit</th></tr>
<tr><td>4 V</td><td>5.0%</td></tr>
<tr><td>6.3 V</td><td>5.0%</td></tr>
<tr><td>10 V</td><td>5.0%</td></tr>
<tr><td>16 V</td><td>3.5%</td></tr>
<tr><td>25 V</td><td>3.5%</td></tr>
<tr><td>50 V</td><td>2.5%</td></tr>
<tr><td>100 V</td><td>2.5%</td></tr>
</table></td></tr>
<tr><td>Insulation Resistance (IR)</td><td>KEMET Internal</td><td>Apply rated voltage for 120 seconds at 25°C</td><td>Within Specification
To obtain IR limit, divide MΩ-µF value by the capacitance and compare to GΩ limit. Select the lower of the two limits.
<table>
<tr><th>Chip</th><th>1,000 megohm microfarads or 100 GΩ</th><th>500 megohm microfarads or 100 GΩ</th></tr>
<tr><td>0402</td><td>< 0.012 µF</td><td>≥ 0.012 µF</td></tr>
<tr><td>0603</td><td>< 0.047 µF</td><td>≥ 0.047 µF</td></tr>
<tr><td>0805</td><td>< 0.15 µF</td><td>≥ 0.15 µF</td></tr>
<tr><td>1206</td><td>< 0.39 µF</td><td>≥ 0.39 µF</td></tr>
<tr><td>1210</td><td>< 0.82 µF</td><td>≥ 0.82 µF</td></tr>
<tr><td>1812</td><td>< 1.8 µF</td><td>≥ 1.8 µF</td></tr>
<tr><td>2220</td><td>< 1.8 µF</td><td>≥ 1.8 µF</td></tr>
</table></td></tr>
<tr><td>Temperature Coefficient of Capacitance (TCC)</td><td>KEMET Internal</td><td>C ≤ 10µF
Frequency: 1 kHz ±50 Hz
Voltage*:1.0 ±0.2 Vrms, 0.5 ±0.2 Vrms, 0.2 ±0.1 Vrms
C > 10µF
Frequency: 120 Hz ±10 Hz
Voltage: 0.5 ±0.1 Vrms

* See part number specification sheet for voltage
<table>
<tr><th>Step</th><th>Temperature (°C)</th></tr>
<tr><td>1</td><td>+25°C</td></tr>
<tr><td>2</td><td>−55°C</td></tr>
<tr><td>3</td><td>+25°C (Reference Temperature)</td></tr>
<tr><td>4</td><td>+125°C</td></tr>
</table></td><td>Capacitance ±15% over −55°C to +125°C</td></tr>
<tr><td>Dielectric Withstanding Voltage (DWV)</td><td>KEMET Internal</td><td>250% of rated voltage
(5 ±1 seconds and charge/discharge not exceeding 50 mA)</td><td>Cap: Initial Limit
DF: Initial Limit
IR: Initial Limit

Withstand test voltage without insulation breakdown or damage.</td></tr>
</table>

Downloaded from Arrow.com.

Table 4 – HRA Performance and Reliability: SMD Test Methods and Conditions cont.

<table>
<tr><th>Test</th><th>Reference</th><th>Test Condition</th><th>Limits</th></tr>
<tr><td>Aging Rate (Maximum % Capacitance Loss/ Decade Hour)</td><td>KEMET Internal</td><td>Capacitance measurements (including tolerance) are indexed to a referee time of 1,000 hours.</td><td>3%</td></tr>
<tr><td>Terminal Strength</td><td>AEC-Q200</td><td>Shear stress test per specific case size, Time: 10±1 second.
<table>
<tr><th>Case Size</th><th>Force</th></tr>
<tr><td>0402</td><td>3N</td></tr>
<tr><td>0603</td><td>5N</td></tr>
<tr><td>0805</td><td>9N</td></tr>
<tr><td>1206</td><td>10N</td></tr>
<tr><td>1210</td><td>10N</td></tr>
<tr><td>>1210</td><td>18N</td></tr>
</table>
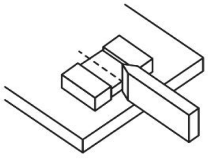 </td><td>No evidence of mechanical damage</td></tr>
<tr><td>Board Flex</td><td>MIL-PRF-32535</td><td>Standard Termination system 2.0 mm
Flexible Termination System 3.0 mm
Test time: 60 ±5 seconds Ramp time: 1 mm/second</td><td>No evidence of mechanical damage</td></tr>
<tr><td>Solderability</td><td>J-STD-002</td><td>Method B,B1: 4 hours ±15 minutes at 155°C dry bake
Test 245 ±5°C (SnPb & Pb-Free)
Method D</td><td>Visual Inspection. 95% coverage on termination. No leaching</td></tr>
<tr><td>Temperature Cycling</td><td>AEC-Q200</td><td>1,000 cycles (−55°C to +125°C)
Measurement at 24 ±4 hours after test conclusion.
15 minutes minimum.
1 min. maximum transition time.</td><td>Measurement at 24 hours ±4 hours after test conclusion.
Cap: ±20% shift
DF: Initial Limit
IR: Initial Limit</td></tr>
<tr><td>Biased Humidity</td><td>MIL-STD-202 Method 103</td><td>Load Humidity: 1,000 hours 85°C/85% RH and rated voltage.</td><td>Measurement at 24 hours ±4 hours after test conclusion.
Within Post Environmental Limits
Cap: ±20% shift
IR: 10% of Initial Limit
<table>
<tr><th colspan="2">DF Limits Maximum (%)</th></tr>
<tr><td>Initial</td><td>Post</td></tr>
<tr><td>2.5%</td><td>3.0%</td></tr>
<tr><td>3.5%</td><td>5.0%</td></tr>
<tr><td>5.0%</td><td>7.5%</td></tr>
</table></td></tr>
</table>

Downloaded from Arrow.com.

Table 4 – HRA Performance and Reliability: SMD Test Methods and Conditions cont.

<table>
<tr><th>Test</th><th>Reference</th><th>Test Condition</th><th>Limits</th></tr>
<tr><td>High Temperature Life</td><td>MIL-STD-202 Method 108</td><td>1,000 hours at 125°C with 2 X rated voltage</td><td>Within Post Environmental Limits
Cap: ±20% shift
IR: 10% of Initial Limit
<table><tr><th colspan="2">DF Limits Maximum (%)</th></tr><tr><td>Initial</td><td>Post</td></tr><tr><td>2.5%</td><td>3.0%</td></tr><tr><td>3.5%</td><td>5.0%</td></tr><tr><td>5.0%</td><td>7.5%</td></tr></table></td></tr>
<tr><td>Vibration</td><td>MIL-STD-202 Method 204</td><td>5 g's for 20 minutes, 12 cycles each of 3 orientations.
Test from 10 – 2,000 Hz</td><td>Cap: ±20% shift
DF: Initial Limit
IR: Initial Limit</td></tr>
<tr><td>Mechanical Shock</td><td>AEC-Q200</td><td>100g's 6 ms Half-sine, Velocity Change 12.3 ft/sec (Condition C)</td><td>Cap: ±20% shift
DF: Initial Limit
IR: Initial Limit</td></tr>
</table>

Downloaded from Arrow.com.

Storage and Handling

Ceramic chip capacitors should be stored in normal working environments. While the chips themselves are quite robust in other environments, solderability will be degraded by exposure to high temperatures, high humidity, corrosive atmospheres, and long term storage. In addition, packaging materials will be degraded by high temperature – reels may soften or warp and tape peel force may increase. KEMET recommends that maximum storage temperature not exceed 40°C and maximum storage humidity not exceed 70% relative humidity. In addition, temperature fluctuations should be minimized to avoid condensation on the parts and atmospheres should be free of chlorine and sulfur bearing compounds. For optimized solderability chip stock should be used promptly, preferably within 1.5 years upon receipt.

Construction

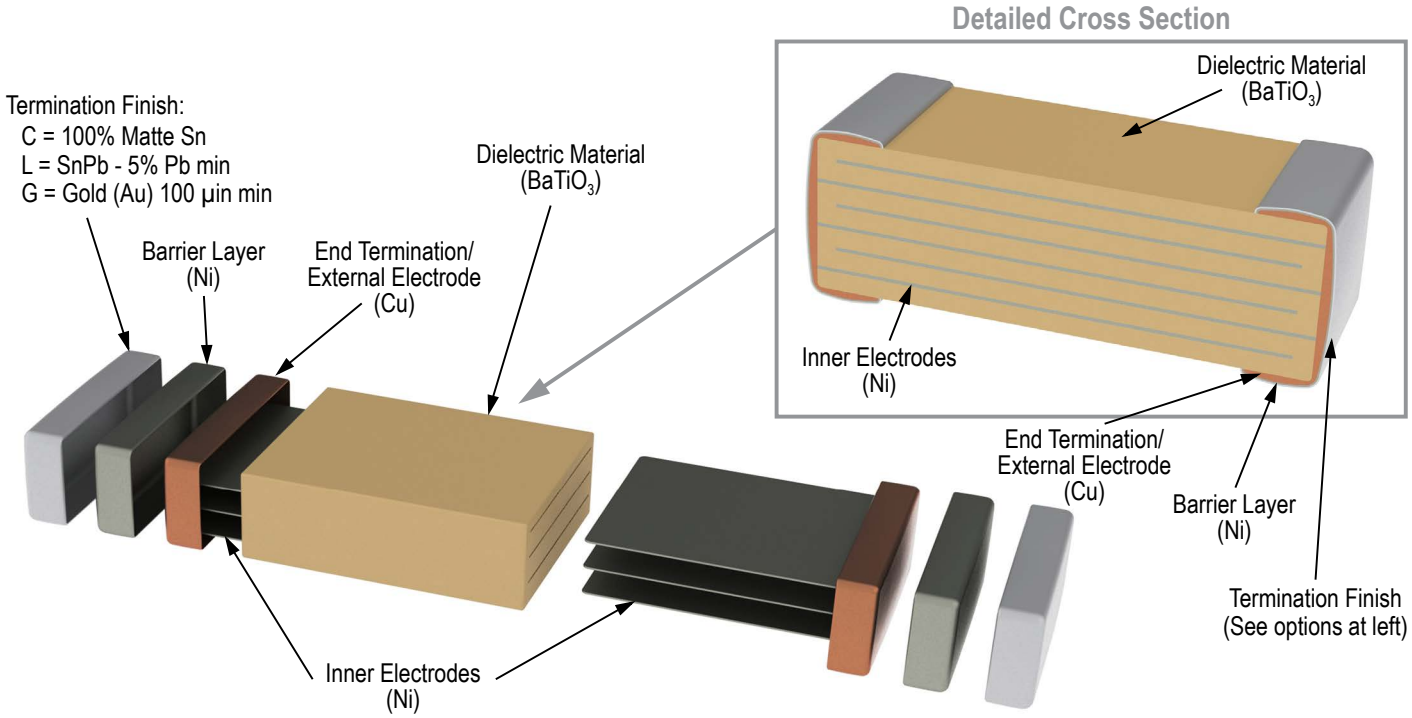

Downloaded from Arrow.com.

Tape & Reel Packaging Information

KEMET offers multilayer ceramic chip capacitors packaged in 8, 12 and 16 mm tape on 7" and 13" reels in accordance with EIA Standard 481. This packaging system is compatible with all tape-fed automatic pick and place systems.

See Table 2 for details on reeling quantities for commercial chips.

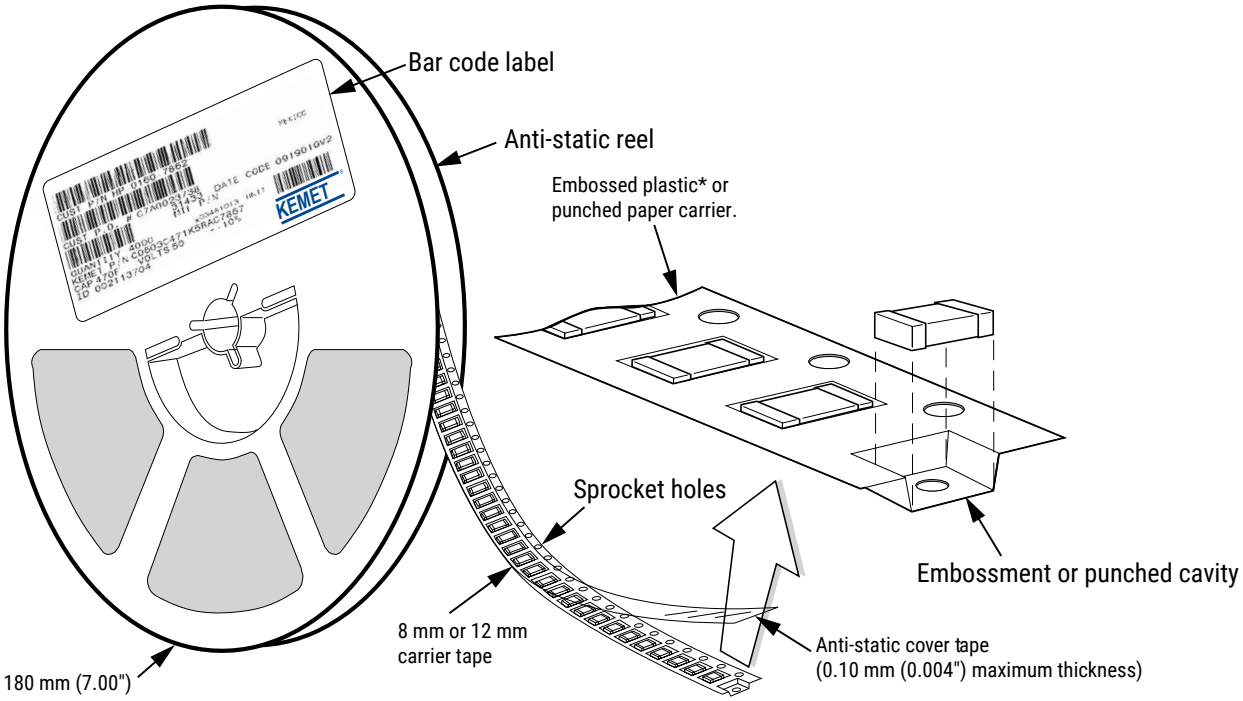

*EIA 0402 and 0603 case sizes available on punched paper carrier only.

Table 5 – Carrier Tape Configuration, Embossed Plastic & Punched Paper (mm)

EIA Case Size	Tape size (W)*	Embossed Plastic	Punched Paper
		7" Reel	
		Pitch (P1)*	
0402	8		2
0603	8		4
0805	8	4	4
1206 – 1210	8	4	4
≥ 1812	12	8	

**Refer to Figures 1 and 2 for W and P_1 carrier tape reference locations.*
**Refer to Tables 5 & 6 for tolerance specifications.*

Downloaded from Arrow.com.

Figure 1 – Embossed (Plastic) Carrier Tape Dimensions

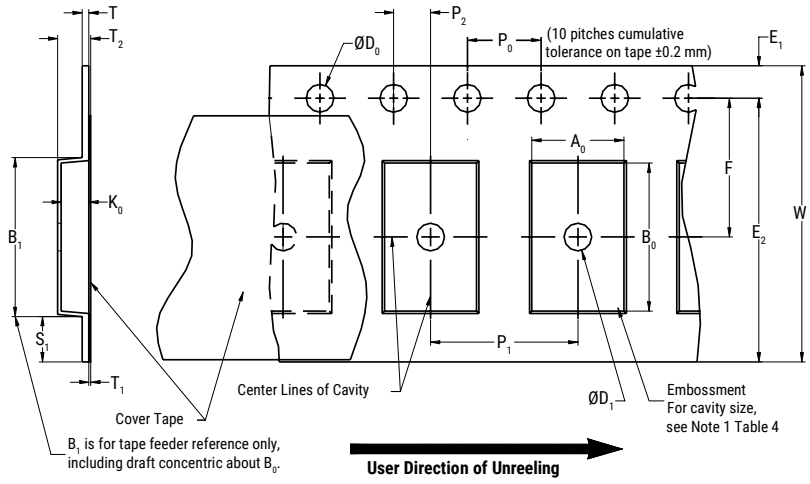

Table 6 – Embossed (Plastic) Carrier Tape Dimensions

Metric will govern

Constant Dimensions — Millimeters (Inches)									
Tape Size	D_0	D_1 Minimum Note 1	E_1	P_0	P_2	R Reference Note 2	S_1 Minimum Note 3	T Maximum	T_1 Maximum
8 mm	1.5 +0.10/-0.0 (0.059 +0.004/-0.0)	1.0 (0.039)	1.75 ± 0.10 (0.069 ± 0.004)	4.0 ± 0.10 (0.157 ± 0.004)	2.0 ± 0.05 (0.079 ± 0.002)	25.0 (0.984)	0.600 (0.024)	0.600 (0.024)	0.100 (0.004)
12 mm		1.5 (0.059)				30 (1.181)			

Variable Dimensions — Millimeters (Inches)								
Tape Size	Pitch	B_1 Maximum Note 4	E_2 Minimum	F	P_1	T_2 Maximum	W Maximum	A_0,B_0 and K_0
8 mm	Single (4 mm)	4.35 (0.171)	6.25 (0.246)	3.5 ± 0.05 (0.138 ± 0.002)	4.0 ± 0.10 (0.157 ± 0.004)	2.5 (0.098)	8.3 (0.327)	Note 5
12 mm	Single (4 mm) and Double (8 mm)	8.2 (0.323)	10.25 (0.404)	5.5 ± 0.05 (0.217 ± 0.002)	8.0 ± 0.10 (0.315 ± 0.004)	4.6 (0.181)	12.3 (0.484)	

Notes

1. The embossment hole location shall be measured from the sprocket hole controlling the location of the embossment. Dimensions of embossment location and hole location shall be applied independent of each other.

2. The tape with or without components shall pass around R without damage (see Figure 6).

3. If S1 < 1.0 mm, there may not be enough area for cover tape to be properly applied (see EIA Document 481 paragraph 4.3 (b)).

4. B1 dimension is a reference dimension for tape feeder clearance only.5. The cavity defined by A0, B0 and K0 shall surround the component with sufficient clearance that:

(a) the component does not protrude above the top surface of the carrier tape.

(b) the component can be removed from the cavity in a vertical direction without mechanical restriction, after the top cover tape has been removed.

(c) rotation of the component is limited to 20° maximum for 8 and 12 mm tapes and 10° maximum for 16 mm tapes (see Figure 3).

(d) lateral movement of the component is restricted to 0.5 mm maximum for 8 mm and 12 mm wide tape and to 1.0 mm maximum for 16 mm tape (see Figure 4)

(e) For KPS Series product, A0 and B0 are measured on a plane 0.3 mm above the bottom of the pocket.

(f) see Addendum in EIA Document 481 for standards relating to more precise taping requirements.

Downloaded from Arrow.com.

Figure 2 – Punched (Paper) Carrier Tape Dimensions

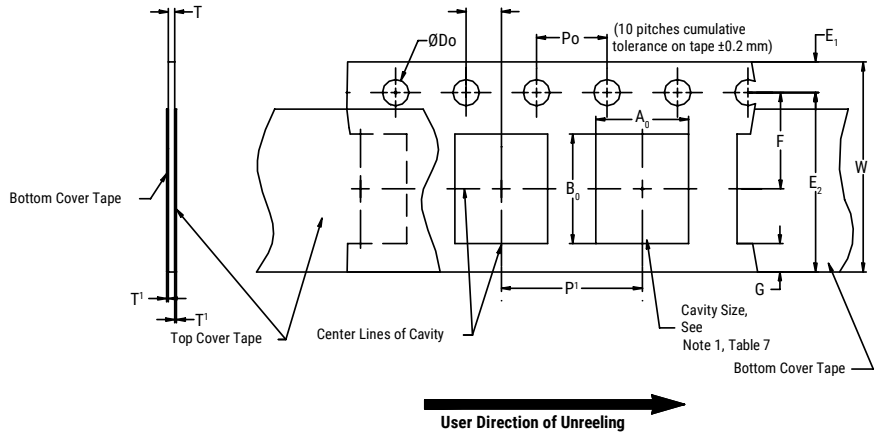

Table 7 – Punched (Paper) Carrier Tape Dimensions

(Metric will govern)

Constant Dimensions — Millimeters (Inches)							
Tape Size	D_0	E_1	P_0	P_2	T_1 Maximum	G Minimum	R Reference Note 2
8 mm	1.5 +0.10/-0.0 (0.059 +0.004/-0.0)	1.75 ± 0.10 (0.069 ± 0.004)	4.0 ± 0.10 (0.157 ± 0.004)	2.0 ± 0.05 (0.079 ± 0.002)	0.100 (0.004)	0.75 (0.030)	25.0 (0.984)

Variable Dimensions — Millimeters (Inches)							
Tape Size	Pitch	E_2 Minimum	F	P_1	T Maximum	W Maximum	A_0 and B_0
8 mm	Half (2 mm)	6.25 (0.246)	3.5 ± 0.05 (0.138 ± 0.002)	2.0 ± 0.05 (0.079 ± 0.002)	1.1 (0.098)	8.3 (0.327)	Note 1
8 mm	Single (4 mm)			4.0 ± 0.10 (0.157 ± 0.004)		8.3 (0.327)	

Notes

1 . The cavity defined by A0, B0 and T shall surround the component with sufficient clearance that:

a) the component does not protrude beyond either surface of the carrier tape.

b) the component can be removed from the cavity in a vertical direction without mechanical restriction, after the top cover tape has been removed.

c) rotation of the component is limited to 20° maximum (see Figure 3).

d) lateral movement of the component is restricted to 0.5 mm maximum (see Figure 4).

e) see Addendum in EIA Document 481 for standards relating to more precise taping requirements.

2. The tape with or without components shall pass around R without damage (see Figure 6).

Downloaded from Arrow.com.

Packaging Information Performance Notes

1. Cover Tape Break Force: 1.0 kg minimum.
2. Cover Tape Peel Strength: The total peel strength of the cover tape from the carrier tape shall be:

Tape Width	Peel Strength
8 mm	0.1 to 1.0 Newton (10 to 100 gf)
12 and 16 mm	0.1 to 1.3 Newton (10 to 130 gf)

The direction of the pull shall be opposite the direction of the carrier tape travel. The pull angle of the carrier tape shall be 165° to 180° from the plane of the carrier tape. During peeling, the carrier and/or cover tape shall be pulled at a velocity of 300 ±10 mm/minute.
3. Labeling: Bar code labeling (standard or custom) shall be on the side of the reel opposite the sprocket holes. Refer to EIA Standards 556 and 624.

Figure 3 – Maximum Component Rotation

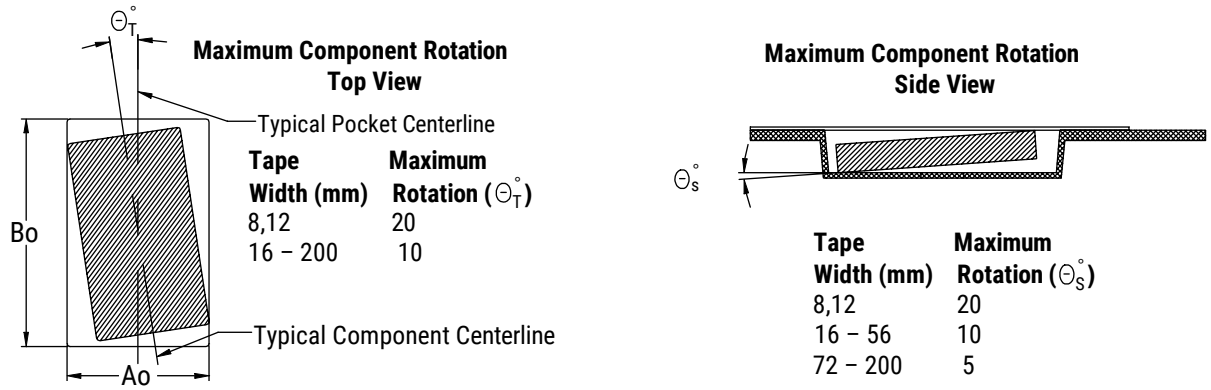

Figure 4 – Maximum Lateral Movement

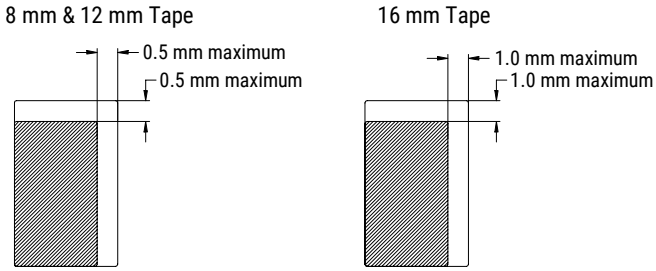

Figure 5 – Bending Radius

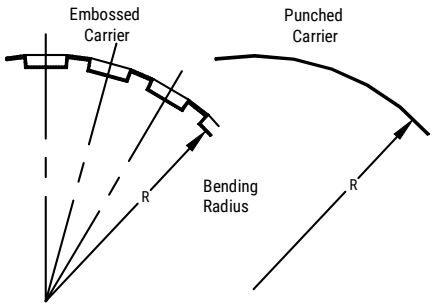

Downloaded from Arrow.com.

Figure 6 – Reel Dimensions

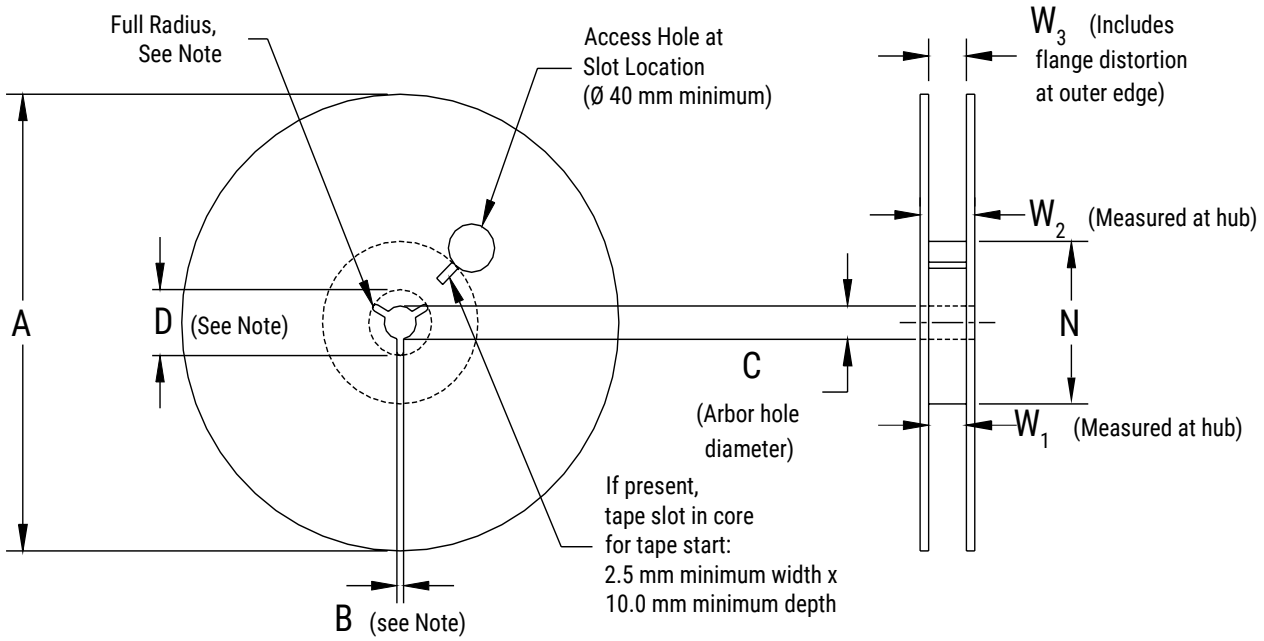

Note: Drive spokes optional; if used, dimensions B and D shall apply.

Table 8 – Reel Dimensions

Metric will govern

Constant Dimensions — Millimeters (Inches)				
Tape Size	A	B Minimum	C	D Minimum
8 mm	178 ± 0.20 (7.008 ± 0.008) or 330 ± 0.20 (13.000 ± 0.008)	1.5 (0.059)	13.0 +0.5/−0.2 (0.521 +0.02/−0.008)	20.2 (0.795)
12 mm				

Variable Dimensions — Millimeters (Inches)				
Tape Size	N Minimum See Note 2, Tables 2–3	W_1	W_2 Maximum	W_3
8 mm	50 (1.969)	8.4 +1.5/−0.0 (0.331 +0.059/−0.0)	14.4 (0.567)	Shall accomadate tape width without interference
12 mm		12.4 +2.0/−0.0 (0.488 +0.078/−0.0)	18.4 (0.724)	

Downloaded from Arrow.com.

Figure 7 – Tape Leader & Trailer Dimensions

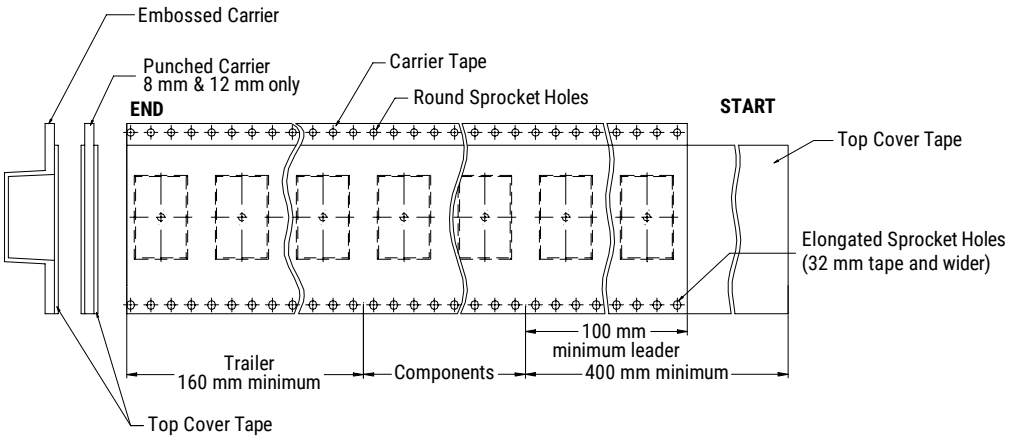

Figure 8 – Maximum Camber

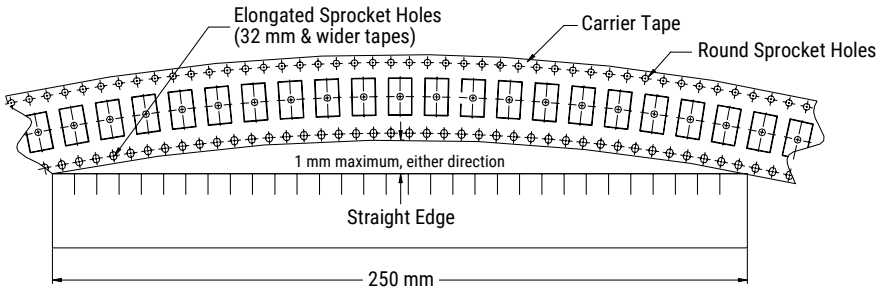

Downloaded from Arrow.com.

Waffle Tray Packaging Information – 2" x 2" w/ Static Protection

Figure 9 – Waffle Tray Dimensions – Inches (Millimeters)

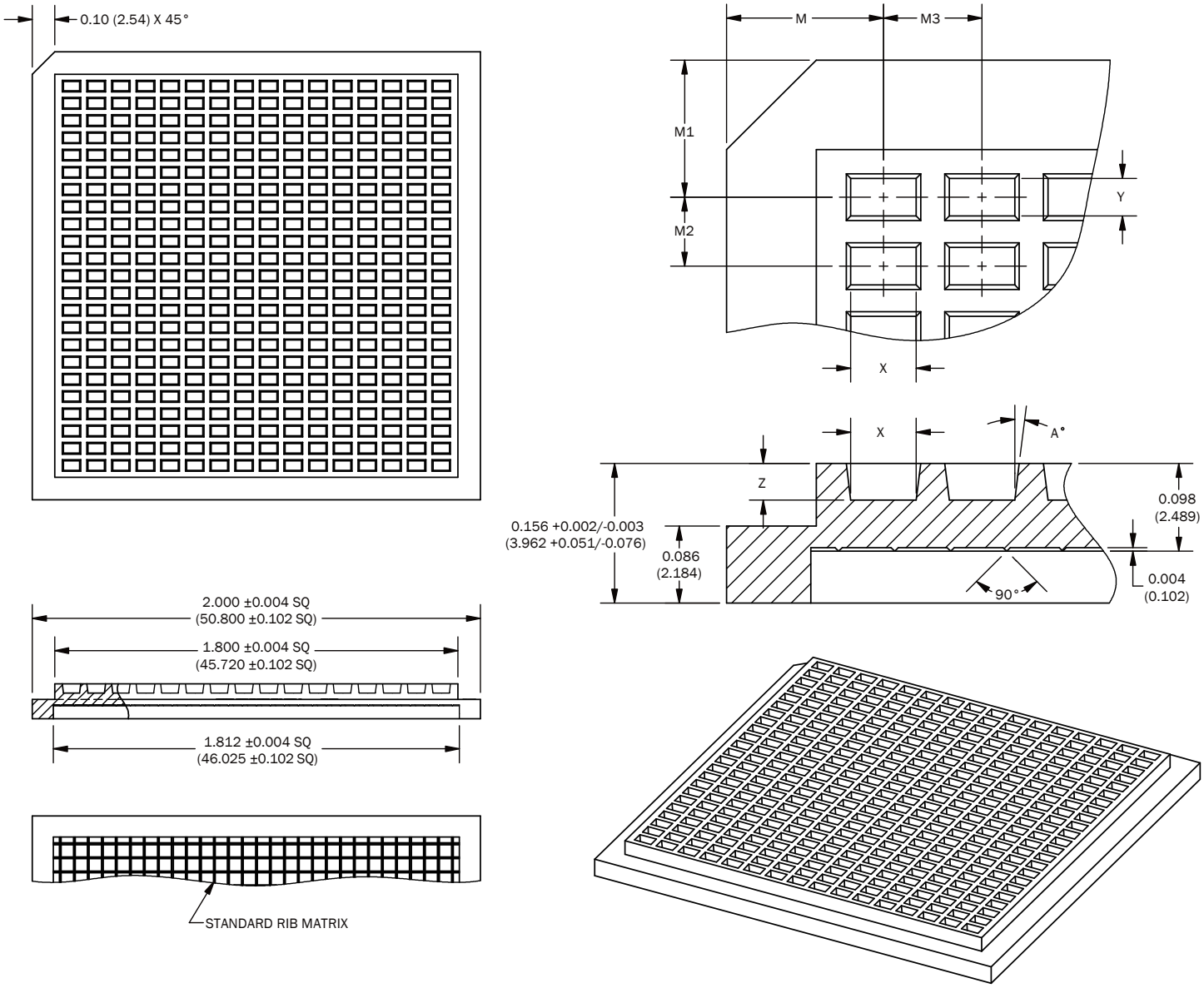

Downloaded from Arrow.com.

Table 9A – Waffle Tray Dimensions – Inches

Case Size (In)	Case Size (mm)	2" x 2" Waffle Tray Dimensions – Inches									Packaging Quantity (pcs/unit packaging)
		M	M1	M2	M3	X	Y	Z	A°	MATRIX	
		±0.003	±0.003	±0.002	±0.002	±0.002	±0.002	±0.003	±1/2°	(X x Y)	
0402	1005	0.175	0.153	0.077	0.110	0.073	0.042	0.041	7	16 X 23	368
0603	1608	0.175	0.153	0.077	0.110	0.073	0.042	0.041	7	16 X 23	368
0805	2012	0.232	0.186	0.181	0.171	0.062	0.092	0.036	10	10 X 10	100
1206[1,2]	3216	0.194	0.228	0.193	0.124	0.067	0.130	0.065	5	14 X 9	126
1206[1,3]	3216	0.250	0.250	0.375	0.167	0.100	0.200	0.070	5	10 X 5	50
1210	3225	0.217	0.244	0.215	0.174	0.110	0.145	0.080	5	10 X 8	80
1812	4532	0.271	0.285	0.286	0.243	0.150	0.200	0.075	5	7 X 6	42
2220	5650	0.318	0.362	0.424	0.34	0.24	0.32	0.032	5	5 X 4	20

[1] Packaging of 1206 (3216 metric) case size capacitors is dependent upon the nominal chip thickness of the device. See" Capacitance Range/Selection Waterfall" and Chip Thickness/Tape& Reel Packaging Quantitie" to identify the nominal chip thickness of the capacitor.
[2] Assigned to 1206 (3216 metric) case size capacitors with nominal thickness of ≤ 1.25mm (0.049 inches).
[3] Assigned to 1206 (3216 metric) case size capacitors with nominal thickness of > 1.25mm (0.049 inches).

Table 9B – Waffle Tray Dimensions – Millimeters

Case Size (In)	Case Size (mm)	2" x 2" Waffle Tray Dimensions – Millimeters									Packaging Quantity (pcs/unit packaging)
		M	M1	M2	M3	X	Y	Z	A°	MATRIX	
		±0.08	±0.08	±0.05	±0.05	±0.05	±0.05	±0.08	±1/2°	(X x Y)	
0402	1005	4.45	3.89	1.96	2.79	1.85	1.07	1.04	7	16 X 23	368
0603	1608	4.45	3.89	1.96	2.79	1.85	1.07	1.04	7	16 X 23	368
0805	2012	5.89	4.72	4.60	4.34	1.57	2.34	0.91	10	10 X 10	100
1206[1,2]	3216	4.93	5.79	4.90	3.15	1.70	3.30	1.65	5	14 X 9	126
1206[1,3]	3216	6.35	6.35	9.53	4.24	2.54	5.08	1.78	5	10 X 5	50
1210	3225	5.51	6.20	5.46	4.42	2.79	3.68	2.03	5	10 X 8	80
1812	4532	6.88	7.24	7.26	6.17	3.81	5.08	1.91	5	7 X 6	42
2220	5650	8.08	9.19	10.77	8.64	6.10	8.13	0.81	5	5 X 4	20

[1] Packaging of 1206 (3216 metric) case size capacitors is dependent upon the nominal chip thickness of the device. See" Capacitance Range/Selection Waterfall" and Chip Thickness/Tape& Reel Packaging Quantities" to identify the nominal chip thickness of the capacitor.
[2] Assigned to 1206 (3216 metric) case size capacitors with nominal thickness of ≤ 1.25mm (0.049 inches).
[3] Assigned to 1206 (3216 metric) case size capacitors with nominal thickness of > 1.25mm (0.049 inches).

Downloaded from Arrow.com.

KEMET Electronics Corporation Sales Offices

For a complete list of our global sales offices, please visit https://www.yageogroup.com/SalesResources/SalesOffices

Disclaimer

YAGEO Corporation and its affiliates do not recommend the use of commercial or automotive grade products for high reliability applications or manned space flight.

All product specifications, statements, information and data (collectively, the "Information") in this datasheet are subject to change. The customer is responsible for checking and verifying the extent to which the Information contained in this publication is applicable to an order at the time the order is placed. All Information given herein is believed to be accurate and reliable, but it is presented without guarantee, warranty, or responsibility of any kind, expressed or implied.

Statements of suitability for certain applications are based on KEMET Electronics Corporation's ("KEMET") knowledge of typical operating conditions for such applications, but are not intended to constitute – and KEMET specifically disclaims – any warranty concerning suitability for a specific customer application or use. The Information is intended for use only by customers who have the requisite experience and capability to determine the correct products for their application. Any technical advice inferred from this Information or otherwise provided by KEMET with reference to the use of KEMET's products is given gratis, and KEMET assumes no obligation or liability for the advice given or results obtained.

Although KEMET designs and manufactures its products to the most stringent quality and safety standards, given the current state of the art, isolated component failures may still occur. Accordingly, customer applications which require a high degree of reliability or safety should employ suitable designs or other safeguards (such as installation of protective circuitry or redundancies) in order to ensure that the failure of an electrical component does not result in a risk of personal injury or property damage.

Although all product–related warnings, cautions and notes must be observed, the customer should not assume that all safety measures are indicated or that other measures may not be required.

KEMET is a registered trademark of KEMET Electronics Corporation.

Downloaded from Arrow.com.