Data Sheet | Item Number: 714-132

THT male header; 0.8 x 0.8 mm solder pin; straight; Pin spacing 3.5 mm; 2-pole; black

https://www.wago.com/714-132

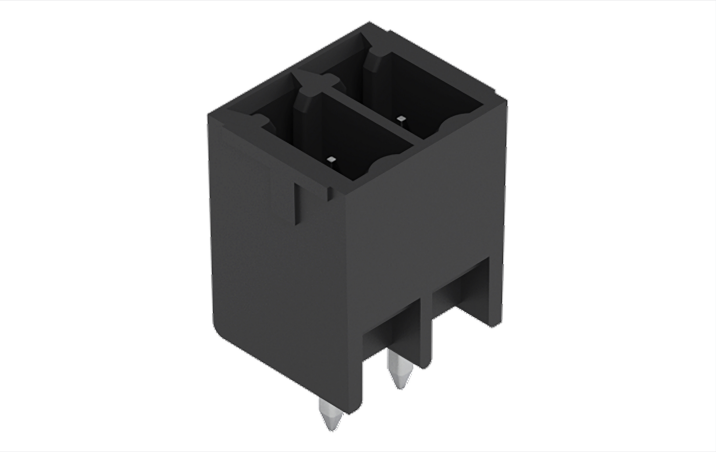

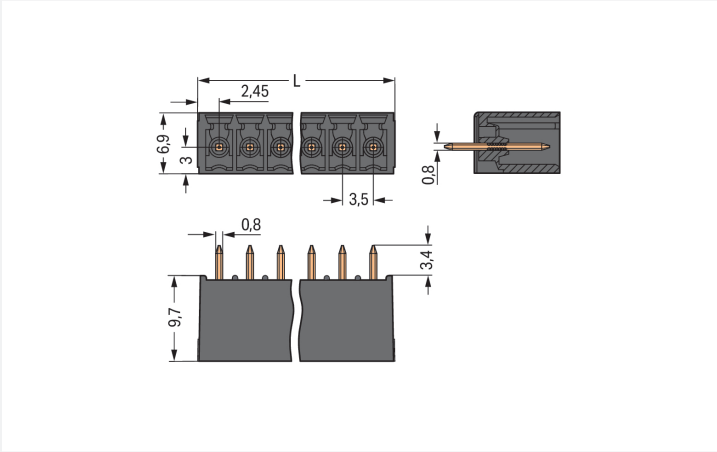

Color: ■ black

Dimensions in mm
L = (pole no. – 1) x pin spacing + 4.9 mm

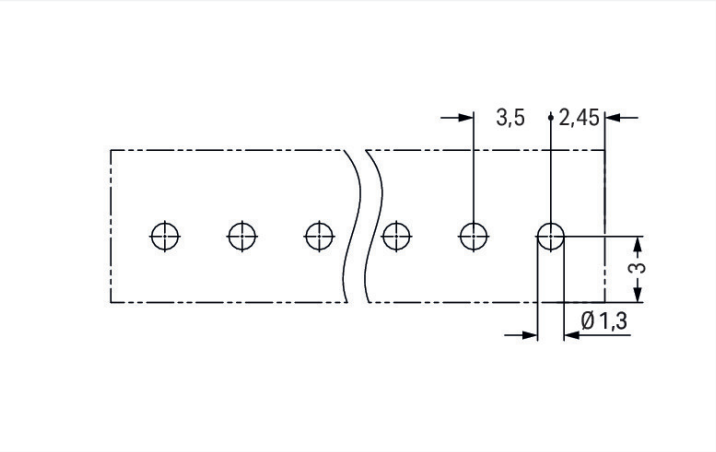

Male connector, 714 Series, with 3.5 mm pin spacing

This male connector (item number 714-132) simplifies electrical installations. Dimensions: (8.4 x 13.1 x 6.9) mm (width x height x depth).

Tin is used for coating the contact surfaces. THT is used to assemble the pcb connector.

Notes	
Safety Information	The *MCS – MULTI CONNECTION SYSTEM* includes connectors without breaking capacity in accordance with DIN EN 61984. When used as intended, these connectors must not be connected/disconnected when live or under load.When used as intended, these connectors must not be connected/disconnected when live or under load. The circuit design should ensure header pins, which can be touched, are not live when unmated.
Variants:	Other pole numbers Other versions (or variants) can be requested from WAGO Sales or configured at https://configurator.wago.com/.

Downloaded from Arrow.com.

Electrical data

Ratings per	IEC/EN 60664-1		
Overvoltage category	III	III	II
Pollution degree	3	2	2
Nominal voltage	160 V	160 V	320 V
Rated impulse withstand voltage	2.5 kV	2.5 kV	2.5 kV
Rated current	8 A	8 A	8 A

Approvals per	UL 1059		
Use group	B	C	D
Rated voltage	150 V	-	-
Rated current	8 A	-	-

Connection Data

Total number of potentials	2
Number of connection types	1
Number of levels	1

Connection 1	
Pole number	2

Physical data

Pin spacing	3.5 mm / 0.138 inches
Width	8.4 mm / 0.331 inches
Height	13.1 mm / 0.516 inches
Height from the surface	9.7 mm / 0.382 inches
Depth	6.9 mm / 0.272 inches
Solder pin length	3.4 mm
Solder pin dimensions	0.8 x 0.8 mm
Drilled hole diameter	$1.2^{(+0.1)}$ mm

Mechanical data

Variable coding	Yes
Anti-rotation protection	Yes

Plug-in connection

Contact type (pluggable connector)	Male connector/plug
Connector (connection type)	for PCB
Mismating protection	No
Mating direction to the PCB	90 °

PCB contact

PCB contact	THT
Solder pin arrangement	over the entire male connector (in-line)
Number of solder pins per potential	1

Material data

Note (material data)	Information on material specifications can be found here
Color	black
Material group	I
Insulation material (main housing)	Polyphthalamide (PPA GF)
Flammability class per UL94	V0
Contact material	Electrolytic copper (E_{Cu})
Contact Plating	Tin
Fire load	0.006 MJ
Weight	0.5 g

Downloaded from Arrow.com.

Environmental requirements

Limit temperature range	-60 … +100 °C
Processing temperature	-35 … +60 °C

Commercial data

Product Group	3 (Multi Conn. System)
PU (SPU)	200 pcs
Packaging type	Box
Country of origin	PL
GTIN	4045454857684
Customs tariff number	85366930000

Product Classification

UNSPSC	39121409
eCl@ss 10.0	27-44-04-02
eCl@ss 9.0	27-44-04-01
ETIM 9.0	EC002637
ETIM 10.0	EC002637
ECCN	NO US CLASSIFICATION

Environmental Product Compliance

RoHS Compliance Status	Compliant,No Exemption

Approvals / Certificates

General approvals

Approval	Standard	Certificate Name
CCA DEKRA Certification B.V.	EN 61984	NTR NL-7604
KEMA/KEUR DEKRA Certification B.V.	EN 61984	2198681.01
UL Underwriters Laboratories Inc.	UL 1059	UL-US-L45172-6187124-1

Downloads

Environmental Product Compliance

Compliance Search

Environmental Product Compliance 714-132

Downloaded from Arrow.com.

Documentation

Additional Information

Technical Section	03.04.2019	pdf 2027.26 KB

CAD/CAE-Data

CAD data

2D/3D Models 714-132

CAE data

ZUKEN Portal 714-132

PCB Design

Symbol and Footprint via SamacSys 714-132

Symbol and Footprint via Ultra Librarian 714-132

1 Compatible Products

1.1 System counterpart

1.1.1 Female connector/socket

Item No.: 714-102
1-conductor female connector; push-button; 1.5 mm²; Pin spacing 3.5 mm; 2-pole; black

Item No.: 714-102/000-047
1-conductor female connector; push-button; 1.5 mm²; Pin spacing 3.5 mm; 2-pole; direct marking; 1,50 mm²; black

1.2 Optional Accessories

1.2.1 Coding

1.2.1.1 Coding

Item No.: 714-101
Coding key; orange

Installation Notes

Coding

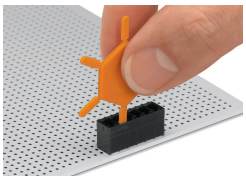

Coding a male header by inserting a coding pin.

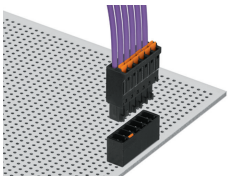

Coded connectors

Downloaded from Arrow.com.

Downloaded from Arrow.com.