Features

Switching Regulator

- 20A non isolated sixteenth brick
- 18 to 75VDC wide input range
- 3.3 to 24VDC adjustable output
- Standard sixteenth brick wide format
- High efficiency up to 98%
- Operating temperature derates to 120°C

RECOM
DC/DC Converter

RPMGS-20

20 Amp 16th Brick Open Frame Single Output

YEAR 3 Warranty

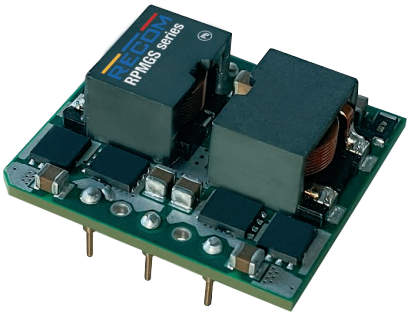

Description

The RPMGS-20 series is a non-isolated 20A DC/DC converter in a sixteenth brick package. The high efficiency and thermal design of the product means that minimal derating is required, even at high temperatures. The device is exceptionally suited for 24V, 28V, and 48V power rails as a point of load solution in a distributed power architecture. Trimmable output, remote sense, and remote control features as well as undervoltage lockout, overload, over-temperature, and short circuit protections are standard.

Selection Guide

Part Number	Input Voltage Range (1) [VDC]	Output Voltage [VDC]	Vout Adjust Range [VDC]	Output Current max. [A]	Efficiency typ. [%]	Max. Capacitive Load [µF]
RPMGS5.0-20	18-75	5	3.3 - 8	20	91 - 94	15000
RPMGS12-20	18-75	12	8 - 24	20	95 - 97	12000

Notes:

Note1: Measured Values are with C_{IN}= 880µF + C_{OUT}= 4000µF

Model Numbering

RPMGS__-20

Sixteenth Brick

nom. Output Voltage

max. Output Current

Specifications (measured @ Ta= 25°C, nom. Vin, full load and after warm-up unless otherwise stated)

BASIC CHARACTERISTICS				
Parameter	**Condition**	**Min.**	**Typ.**	**Max.**
Internal Input Filter				capacitor
Input Voltage Range		18VDC		75VDC
Absolute Maximum Input Voltage				80VDC
Undervoltage Lockout (UVLO)	DC-DC ON DC-DC OFF		16.5VDC 14.0VDC	
Input Current	RPMGS5.0-20		2.3A	
	RPMGS12-20		5.2A	
Quiescent Current (no load)			30mA	
No Load Power Consumption	V_{IN}= 24VDC		720mW	
	V_{IN}= 48VDC		1440mW	
	V_{IN}= 60VDC		1800mW	
Internal Power Dissipation				10W

continued on next page

Downloaded from Arrow.com.

Specifications (measured @ Ta= 25°C, nom. Vin, full load and after warm-up unless otherwise stated)

Parameter	Condition			Min.	Typ.	Max.
Output Voltage Trimming [2]	RPMGS5.0-20			3.3VDC		8VDC
	RPMGS12-20			8VDC		24VDC
Minimum Load				0%		
Minimum Dropout Voltage	RPMGS12-20, full load, refer to **"Typical Dropout Voltage"**				1VDC	
Startup-time	RPMGS5.0-20				13ms	
	RPMGS12-20				20ms	
Rise-time	RPMGS5.0-20				8ms	
	RPMGS12-20				16ms	
ON/OFF CTRL	DC-DC ON			Open or 1.8V<V_{CTRL}<5.4VDC		
	DC-DC OFF			Short or 0V<V_{CTRL}<0.9VDC		
Standby Current	DC-DC OFF CTRL to GND	RPMGS5.0-20	V_{IN}= 24VDC		0.065mA	
			V_{IN}= 48VDC		0.126mA	
			V_{IN}= 60VDC		0.156mA	
		RPMGS12-20	V_{IN}= 24VDC		0.065mA	
			V_{IN}= 48VDC		0.133mA	
			V_{IN}= 60VDC		0.162mA	
Internal Operating Frequency				200kHz	210kHz	220kHz

Notes:

Note2: For more detailed information, please refer to **"OUTPUT VOLTAGE TRIMMING"**

Typical Application

RPMGS12-20

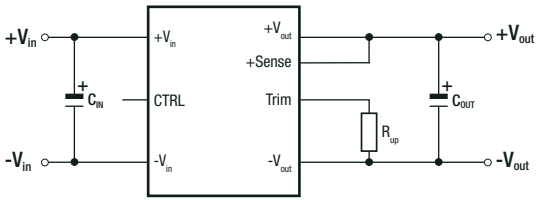

VOUTset	C_{IN}	R_{up}	C_{OUT}
15VDC	>200µF	10kΩ	>=1000µF ESR<30mΩ
For nom. V_{OUT} leave Trim pin open			

Notes:

Note3: +Sense must be connected to $+V_{OUT}$ for proper operation, otherwise the unit could be damaged.

Typical Dropout Voltage

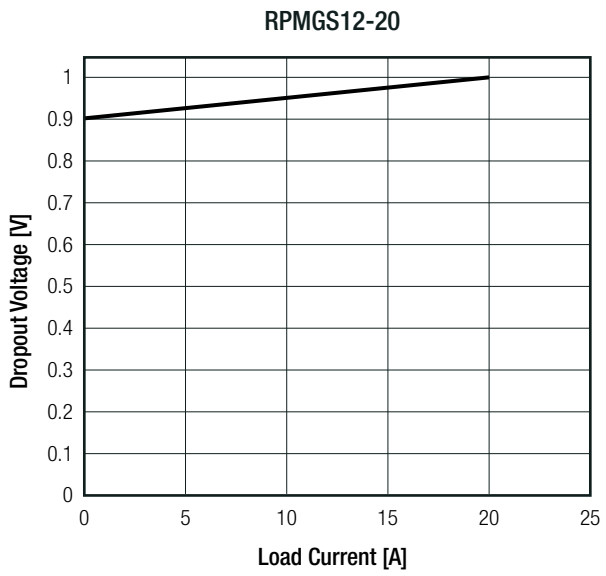

Downloaded from Arrow.com.

Specifications (measured @ Ta= 25°C, nom. Vin, full load and after warm-up unless otherwise stated)

Efficiency vs. Load

RPMGS5.0-20

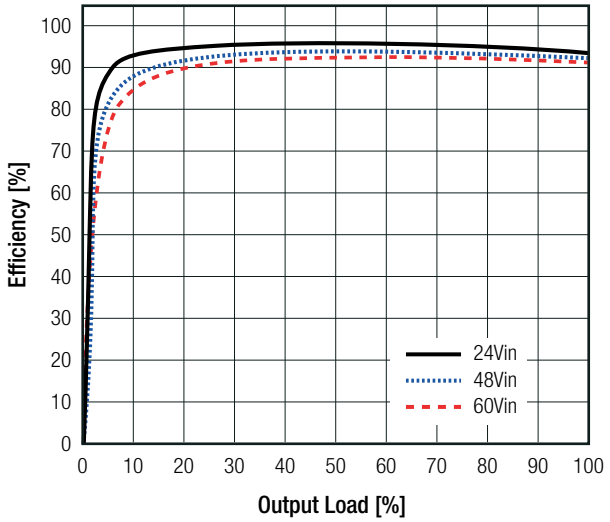

RPMGS12-20

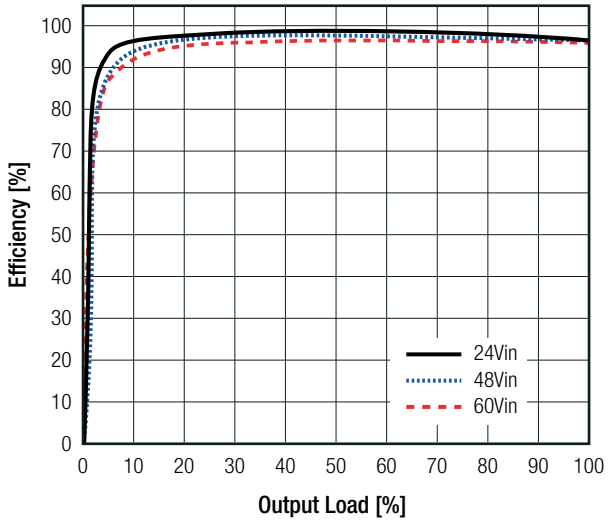

OUTPUT VOLTAGE TRIMMING

The RPMGS series offers the feature of trimming the output voltage over a range between 3.3V and 24V by using external trim resistors. The values for trim resistors shown in trim tables below are according to standard E96 values; therefore, the specified voltage may slightly vary.

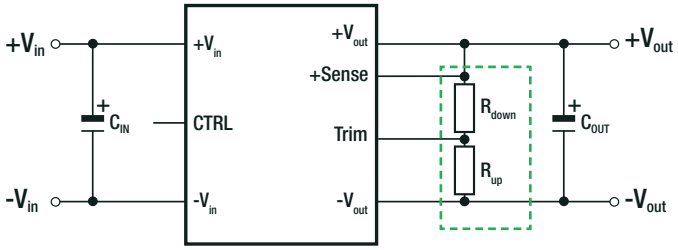

$Vout_{nom}$	= nominal output voltage	[VDC]
$Vout_{set}$	= trimmed output voltage	[VDC]
R_{up}	= trim up resistor	[Ω]
R_{down}	= trim down resistor	[Ω]
R_3, R_4, R_5	= internal resistors	[Ω]

	R_3 [Ω]	R_4 [Ω]	R_5 [Ω]	V_{REF} [VDC]
RPMGS5.0-20	18k2	3k48	3k48	0.8
RPMGS12-20	48k7	3k48	2k87	0.8

Calculation:

$$R_{UP} = \frac{V_{REF} \times R3 \times (R4 + R5) - R4 \times R5 \times (V_{OUTset} - V_{REF})}{(V_{OUTset} - V_{REF}) \times R4 - V_{REF} \times R3} = \Omega$$

$$R_{DOWN} = \frac{V_{OUTset} \times (R3 \times R4 + R4 \times R5) - V_{REF} \times (R3 \times R4 + R4 \times R5 + R3 \times R5)}{V_{REF} \times (R3 + R4) - R4 \times V_{OUTset}} = \Omega$$

RPMGS5.0-20

Trim up

$Vout_{set}$ =	5.5	6.0	7.0	8.0	[VDC]
R_{up} (E96) ≈	33k2	13k3	4k42	1k69	[Ω]

Trim down

$Vout_{set}$ =	3.3	3.6	4.0	4.5	[VDC]
R_{down} (E96) ≈	22k6	31k6	51k	113k	[Ω]

RPMGS12.0-20

Trim up

$Vout_{set}$ =	15.0	18.0	20.0	24.0	[VDC]
R_{up} (E96) ≈	10k	3k57	2k	0k374	[Ω]

Trim down

$Vout_{set}$ =	8.0	9.0	10.0	11.0	[VDC]
R_{down} (E96) ≈	84k5	130k	221k	499k	[Ω]

Downloaded from Arrow.com.

Specifications (measured @ Ta= 25°C, nom. Vin, full load and after warm-up unless otherwise stated)

REMOTE SENSE

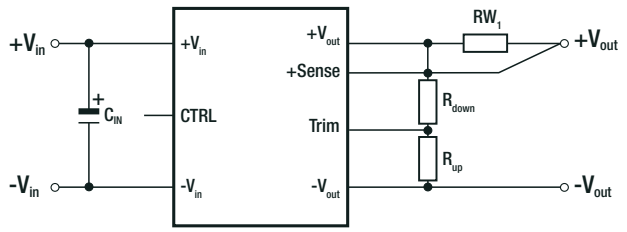

The output voltage can be adjusted via the trim and sense functions.
The maximum output voltage from Trim and Sense function combined is 8VDC for RPMGSQ5.0-20 and 24VDC for RPMGS12-20. Derating may be required when using Trim and/or sense functions.

RW_1 ... wire losses +
R_{up} ... trim up resistor
R_{down} ... trim down resistor

REGULATIONS

Parameter	Condition			Value
Output Accuracy				±1.0% max.
Line Regulation	low line to high line, full load			0.5% typ. / ±1.0% max.
Load Regulation	0% to 100% load			0.5% typ. / ±1.0% max.
Transient Response	5% - 100%	RPMGS5.0-20	V_{IN}= 24VDC	40mV typ.
			V_{IN}= 48VDC	70mV typ.
			V_{IN}= 60VDC	90mV typ.
	5% - 100%	RPMGS12-20	V_{IN}= 24VDC	50mV typ.
			V_{IN}= 48VDC	95mV typ.
			V_{IN}= 60VDC	110mV typ.

PROTECTIONS

Parameter	Condition		Value
Short Circuit Protection (SCP)	hiccup mode, auto recovery	RPMGS5.0-20	22.1A
		RPMGS12-20	20.6A
Short Circuit Input Current	V_{IN}= 24VDC		30mA typ.
	V_{IN}= 48VDC		18mA typ.
Over Current Protection (OCP)	hiccup mode, auto recovery	RPMGS5.0-20	22.1A
		RPMGS12-20	20.6A
Over Temperature Protection (OTP)	measured on IC		160°C, auto restart after cool down

SAFETY AND CERTIFICATIONS

Certificate Type (Safety)	Report / File Number	Standard
RoHS 2+		RoHS 2011/65/EU + AM2015/863

continued on next page

Downloaded from Arrow.com.

Specifications (measured @ Ta= 25°C, nom. Vin, full load and after warm-up unless otherwise stated)

SAFETY AND CERTIFICATIONS

EMC Compliance	Condition	Standard / Criterion
Electromagnetic compatibility of multimedia equipment - emission requirements	with external components (see filter suggestions below)	EN55032, Class A and B

EMC filtering suggestion according to EN55032

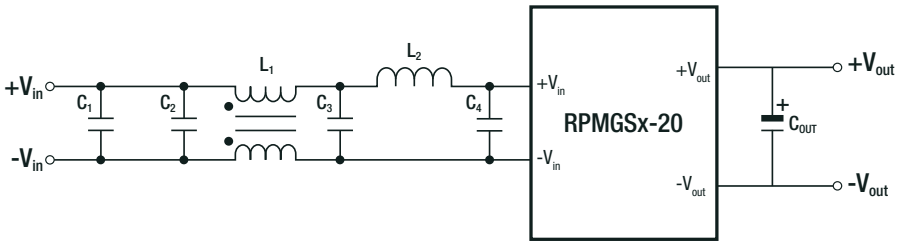

Component List Class A

C1	C2	C3	C4	L1	L2	C_{OUT}
2x 330µF	3x 22µF	10µF	1000µF	56µH	10µH	>=1000uF

ENVIRONMENTAL

Parameter	Condition		Value
Operating Temperature Range	with forced airflow		-40°C to +120°C
Operating Humidity	non-condensing		5% - 95% RH max.
Operating Altitude			5000m
Vibration			MIL-STD-833G, method 2026 test condition II, letter "B"
MTBF	according to MIL-HDBK-217F, G.B.	RPMGS5.0-20	1195 x 10^3 hours
		RPMGS12-20	1095 x 10^3 hours

Derating Graph

24Vin

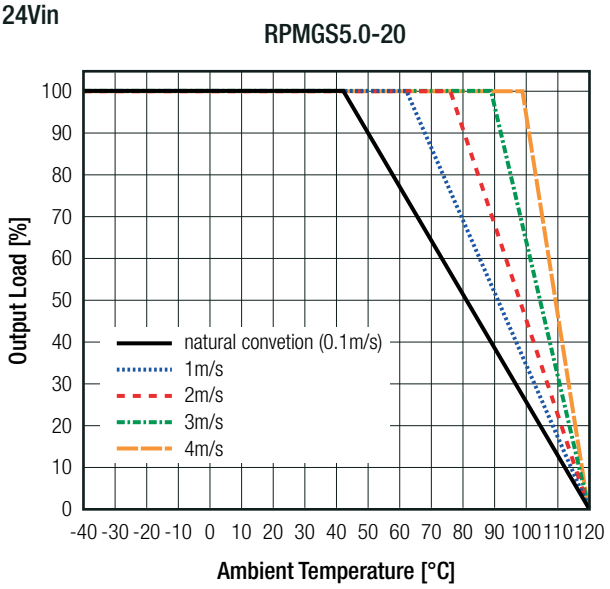

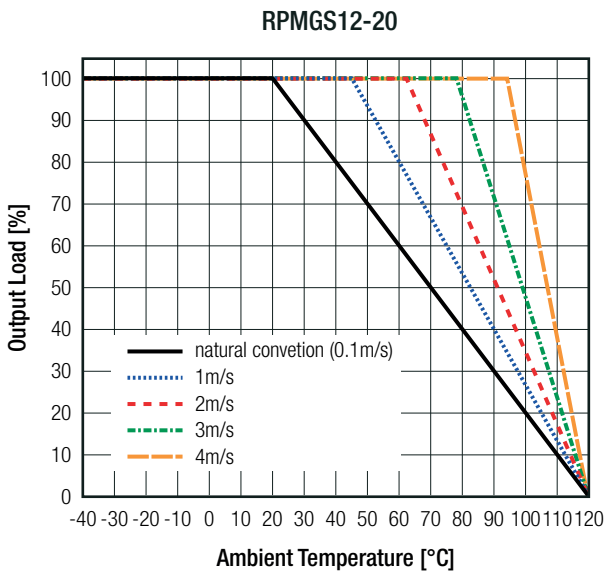

continued on next page

Downloaded from Arrow.com.

Specifications (measured @ Ta= 25°C, nom. Vin, full load and after warm-up unless otherwise stated)

48Vin

RPMGS5.0-20

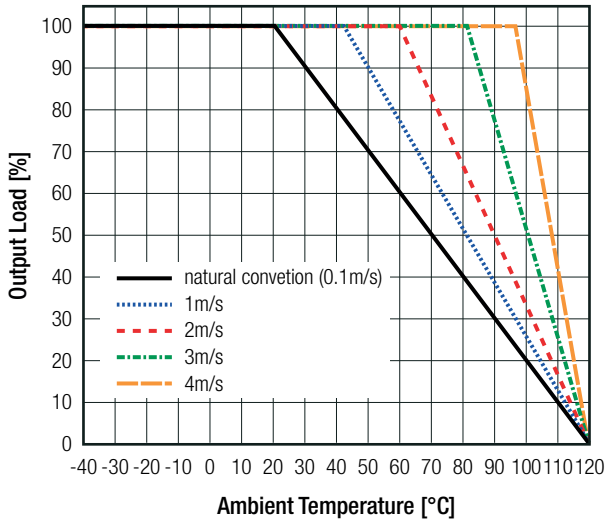

RPMGS12-20

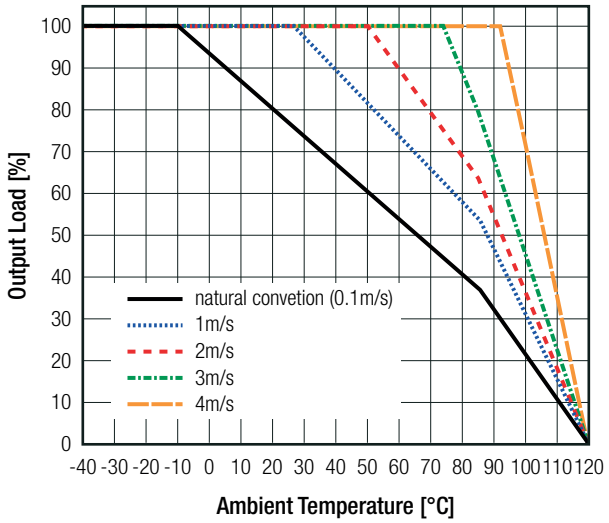

DIMENSION AND PHYSICAL CHARACTERISTICS

Parameter	Type	Value
Material	PCB	FR4, (UL94 V-0)
Dimension (LxWxH)		36.83 x 34.04 x 15.0mm
Weight		29g typ.

Dimension Drawing (mm)

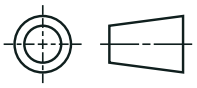

Top View

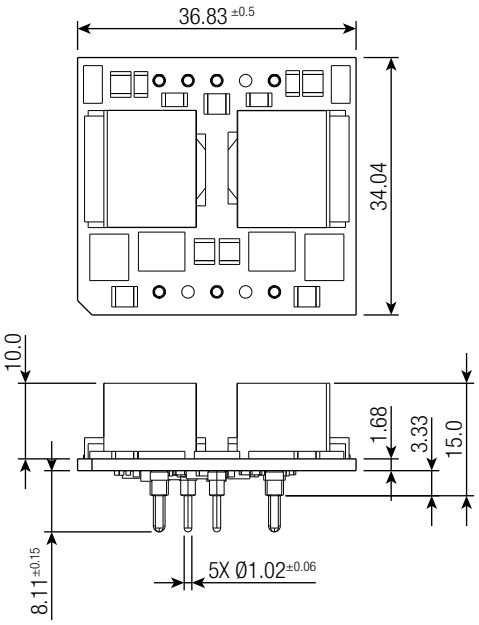

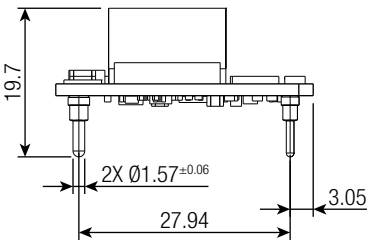

Pinning Information

Pin #	Single	Pin Ø
1	+Vin	1.02
2	CTRL/UVLO	1.02
3	-Vin	1.02
4	-Vout	1.57
5	TRIM	1.02
6	+SENSE	1.02
7	+Vout	1.57

continued on next page

Downloaded from Arrow.com.

Specifications (measured @ Ta= 25°C, nom. Vin, full load and after warm-up unless otherwise stated)

Dimension Drawing (mm)

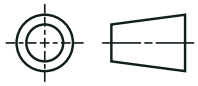

Bottom View RPMGS5.0-20

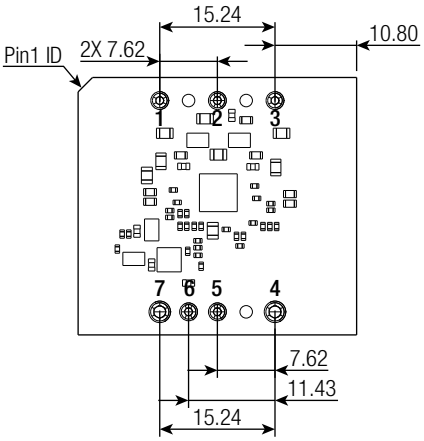

Bottom View RPMGS12-20

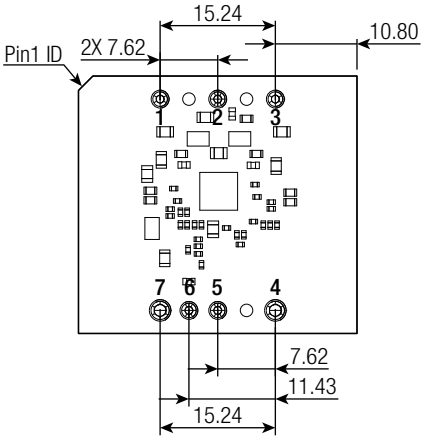

Recommended Footprint Details

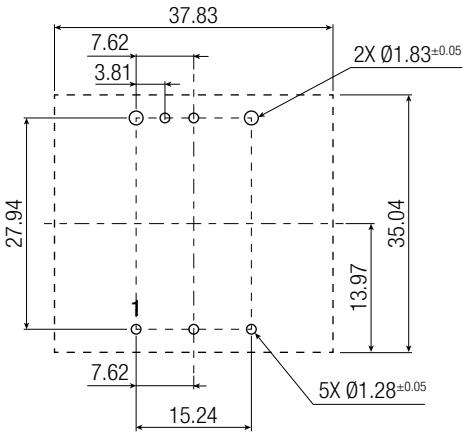

Tolerance:
xx.x= ±0.5mm
xx.xx= ±0.25mm

PACKAGING INFORMATION

Parameter	Type	Value
Packaging Dimension (LxWxH)	tray	305.0 x 165.0 x 45.0mm
Packaging Quantity		15pcs
Storage Temperature Range		-55°C to +125°C
Storage Humidity	non-condensing	95% RH max.

e product information and specifications may be subject to changes even without prior written notice.The product has been designed for various applications; its suitability lies in the responsibility of each customer. The produc
ıre not authorized for use in safety-critical applications without RECOM's explicit written consent. A safety-critical application is an application where a failure may reasonably be expected to endanger or cause loss of life, inflict bodily harm or damage property. The applicant shall indemnify and hold harmless RECOM, its affiliated companies and its representatives against any damage claims in connection with the unauthorized use of RECOM products in such safety-critical applications.

Downloaded from Arrow.com.