SK19065

THIS DRAWING CONTAINS INFORMATION PROPRIETARY TO POSITRONIC AND IT'S SUBSIDIARIES. POSITRONIC BELIEVES THE DATA ON THIS DRAWING TO BE RELIABLE, SINCE THE TECHNICAL INFORMATION IS GIVEN FREE OF CHARGE, THE USER EMPLOYS SUCH INFORMATION AT HIS OWN DISCRETION AND RISK. POSITRONIC ASSUMES NO RESPONSIBILITY FOR RESULTS OBTAINED OR DAMAGES INCURRED FROM USE OF SUCH INFORMATION IN WHOLE OR IN PART.

DATE	REV	REVISION RECORD	APP	DR	CK
6-6-16	NC	ECO 51123	COLE	KV	COLE

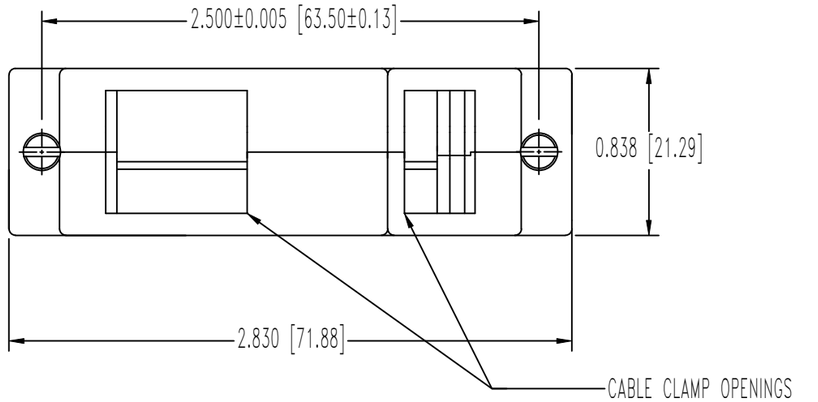

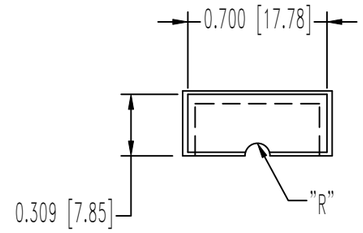

INSERT DETAIL

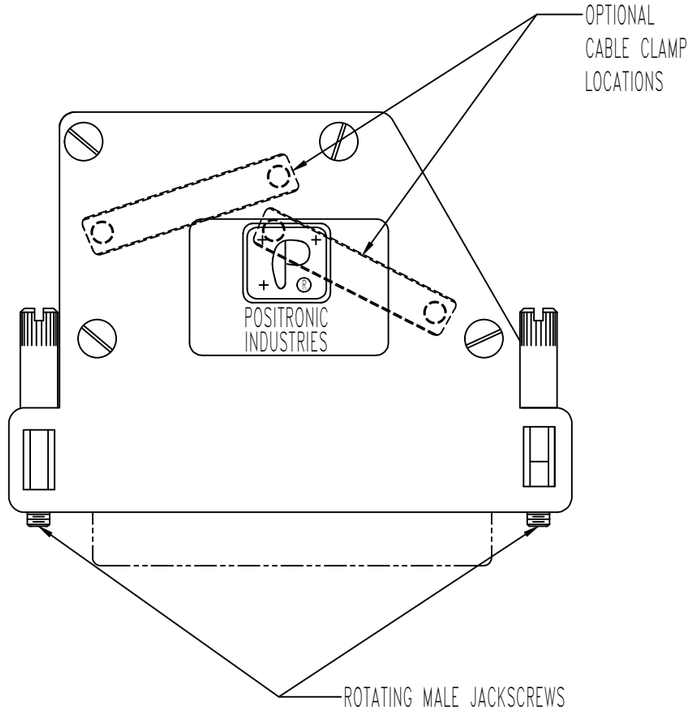

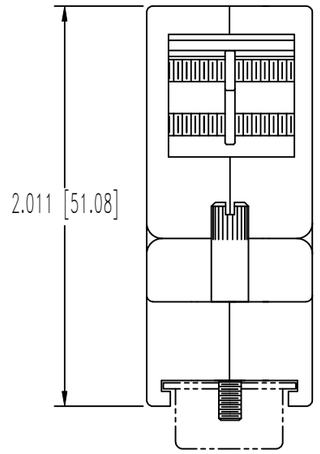

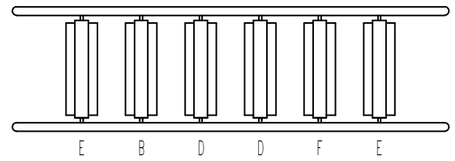

INSERT TREE ASSEMBLY

INSERT CODE	RADIUS "R"
A	0.063 [1.60]
B	———
C	0.153 [3.87]
D	0.215 [5.46]
E	0.275 [6.99]
F	———

NOTES:

1. MATERIAL AND FINISHES:
   HOOD AND TREE INSERT: PBT(EMI), BLACK, COMPOSITE, CONDUCTIVE VOLUME RESISTIVITY [1.0 OHM-CM MAXIMUM].
   JACKSCREWS: STEEL, WITH ZINC PLATE.
   CABLE CLAMPS: STEEL, WITH NICKEL PLATE.
2. DETAILED PRODUCT, MECHANICAL, AND ELECTRICAL INFORMATION IS AVAILABLE IN THE LATEST D-SUB ACCESSORIES PRODUCT PUBLICATION AT CONNECTPOSITRONIC.COM
3. CONNECTORS ARE COMPLIANT PER CURRENT ROHS DIRECTIVE.
4. DIMENSIONS ARE IN INCHES [MILLIMETERS].

POSITRONIC INDUSTRIES INC.
www.connectpositronic.com
FSCM 28198

DECIMAL TOL. ± 0.015 (0,38)
ANGULAR TOL. ± 5°

D SERIES "Y" HOOD
SCALE N.T.S.
DRAWN BY KUNAL V.
APPROVED BY COLE

TITLE D104000Y00/AA

DATE 6-6-16
DRAWING NUMBER SK19065
REV. NC

Downloaded from Arrow.com.