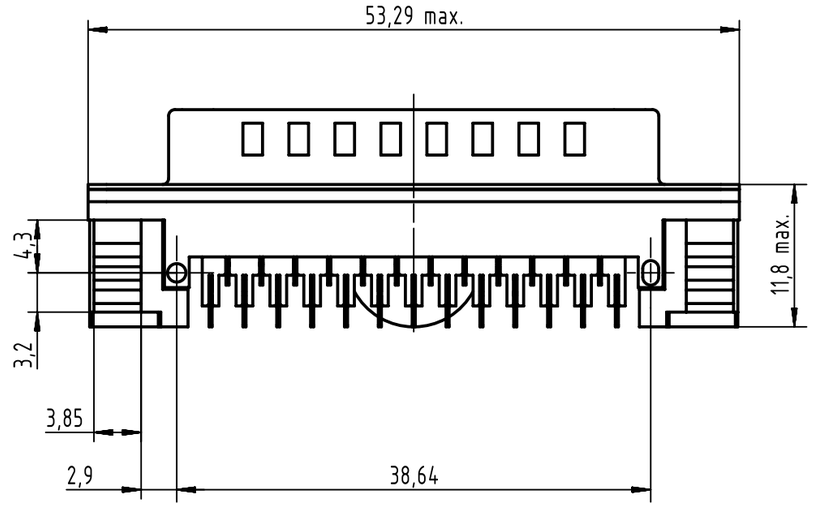

PCB layout, mounting side (thickness 1,6 min.)

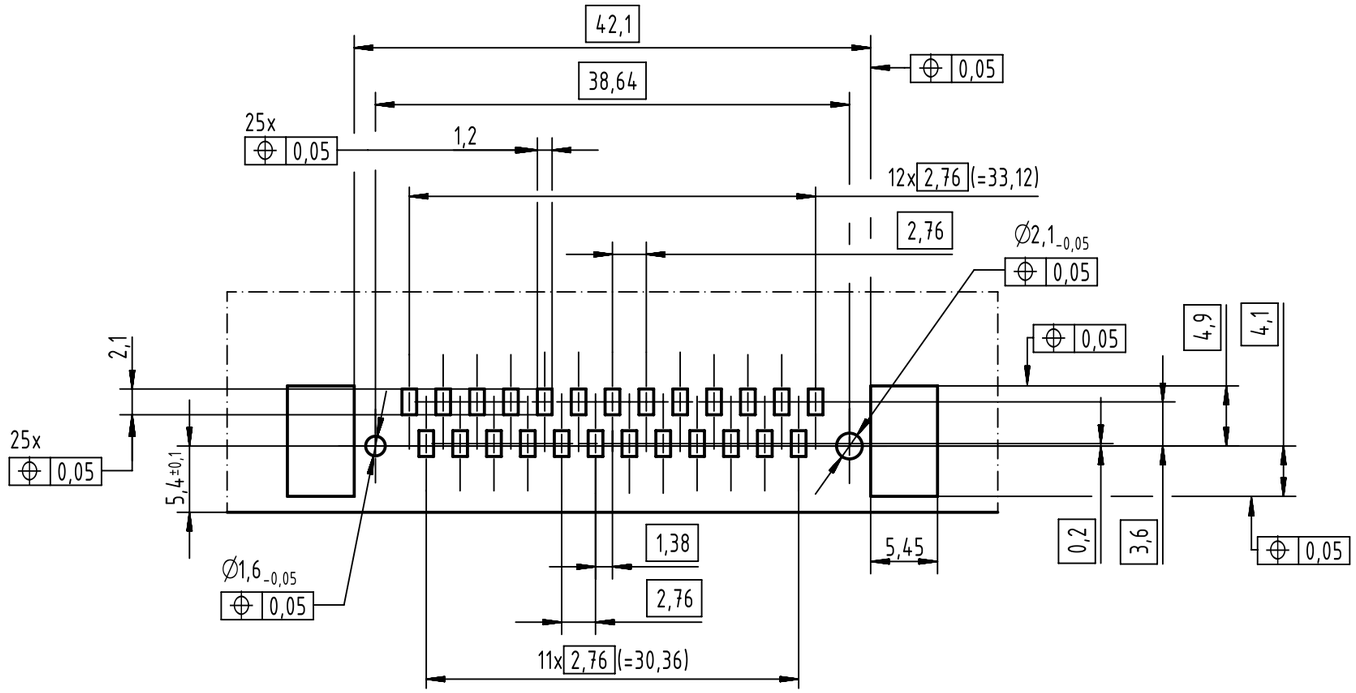

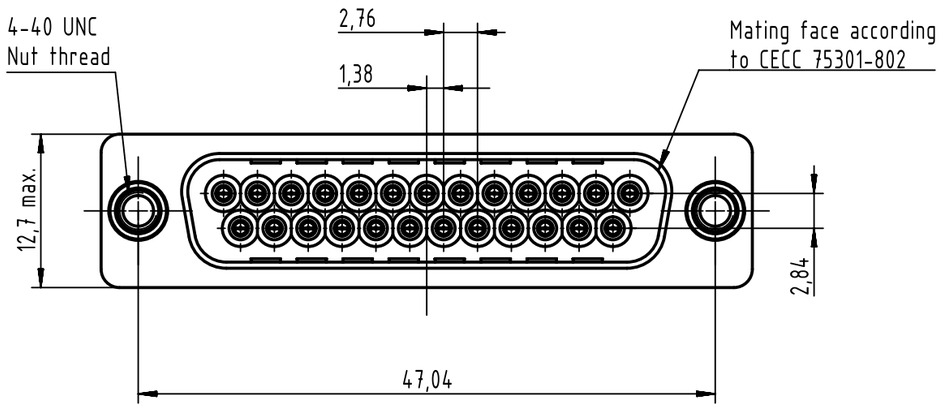

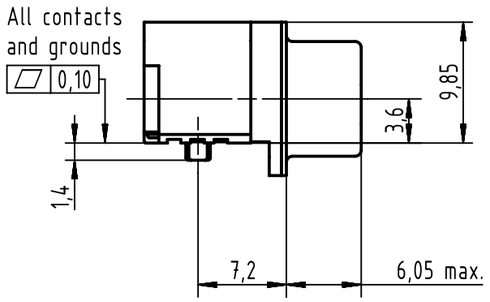

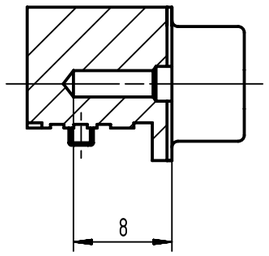

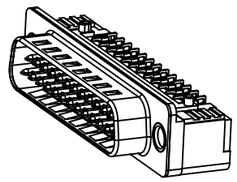

Max. Temperature: 260°C during 10 seconds
Find further technical information on DS 09550200301

Part number	PL	Thread	Index designation	
0955 366 6816 333	2	4-40 UNC	Black insulator	Samples
0955 366 3816 741	1	4-40 UNC	Black insulator	Reel Packaging (160 connectors)
0955 366 6816 741	2			
0955 366 7816 741	3			

All Dimensions in mm
Original Size DIN A3

Scale 2:1 | Free size tol. | Ref. | Sub.

All rights reserved

Department EC PD - CN

HARTING Electronics GmbH
D-32339 Espelkamp

Created by	Inspected by	Standardisation	Date	State
ZHUANGJ	LUOK	HOFFMANN	2016-08-31	Final Release

Title: D-Sub angled LP 25-pole male with screw nut

Doc-Key / ECM-Nr.: 100684448/UGD/000/A 500000107532

Type: TB | Number: 0955366X816 | Rev.: A | Page: 1/1

A3

Downloaded from Arrow.com.