ZED-F9P

u-blox F9 high precision GNSS module

Data sheet

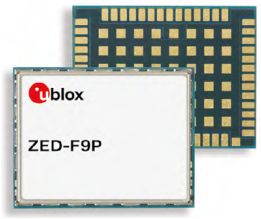

Abstract

This data sheet describes the ZED-F9P high precision module with multi-band GNSS receiver. The module provides multi-band RTK with fast convergence times, reliable performance and easy integration of RTK for fast time-to-market. It has a high update rate for highly dynamic applications and centimeter accuracy in a small and energy-efficient module.

www.u-blox.com

UBX-17051259 - R07

Downloaded from Arrow.com.

Document information

Title	**ZED-F9P**	
Subtitle	u-blox F9 high precision GNSS module	
Document type	Data sheet	
Document number	UBX-17051259	
Revision and date	R07	20-Feb-2020
Document status	Early production information	

Product status	Corresponding content status	
In development / prototype	Objective specification	Target values. Revised and supplementary data will be published later.
Engineering sample	Advance information	Data based on early testing. Revised and supplementary data will be published later.
Initial production	Early production information	Data from product verification. Revised and supplementary data may be published later.
Mass production / End of life	Production information	Document contains the final product specification.

This document applies to the following products:

Product name	Type number	Firmware version	PCN reference
ZED-F9P	ZED-F9P-01B-01	HPG 1.12	UBX-19057484

u-blox reserves all rights to this document and the information contained herein. Products, names, logos and designs described herein may in whole or in part be subject to intellectual property rights. Reproduction, use, modification or disclosure to third parties of this document or any part thereof without the express permission of u-blox is strictly prohibited.

The information contained herein is provided "as is" and u-blox assumes no liability for the use of the information. No warranty, either express or implied, is given with respect to, including but not limited to, the accuracy, correctness, reliability and fitness for a particular purpose of the information. This document may be revised by u-blox at any time. For most recent documents, please visit www.u blox.com.

Copyright © 2020, u-blox AG.

u-blox is a registered trademark of u-blox Holding AG in the EU and other countries.

Downloaded from Arrow.com.

Contents

1 Functional description 4
1.1 Overview 4
1.2 Performance 4
1.3 Supported GNSS constellations 6
1.4 Supported GNSS augmentation systems 6
1.4.1 Quasi-zenith satellite system (QZSS) 6
1.4.2 Differential GNSS (DGNSS) 6
1.5 Broadcast navigation data and satellite signal measurements 8
1.5.1 Carrier-phase measurements 8
1.6 Supported protocols 8
2 System description 9
2.1 Block diagram 9
3 Pin definition 10
3.1 Pin assignment 10
4 Electrical specification 13
4.1 Absolute maximum ratings 13
4.2 Operating conditions 13
4.3 Indicative power requirements 14
5 Communications interfaces 15
5.1 UART interface 15
5.2 SPI interface 15
5.3 Slave I2C interface 16
5.4 USB interface 18
5.5 Default interface settings 18
6 Mechanical specification 19
7 Reliability tests and approvals 20
7.1 Approvals 20
8 Labeling and ordering information 21
8.1 Product labeling 21
8.2 Explanation of product codes 21
8.3 Ordering codes 21
Related documents 22
Revision history 23

Downloaded from Arrow.com.

1 Functional description

1.1 Overview

The ZED-F9P positioning module features the u-blox F9 receiver platform, which provides multi-band GNSS to high volume industrial applications. The ZED-F9P has integrated u-blox multi-band RTK technology for centimeter level accuracy. The module enables precise navigation and automation of moving machinery in industrial and consumer grade products in a compact surface mounted form factor.

The ZED-F9P includes moving base support, allowing both base and rover to move while computing a centimeter-level accurate position between them. Moving base is ideal for UAV applications where the UAV is programmed to follow its owner or to land on a moving platform. It is also well suited to attitude sensing applications where both base and rover modules are mounted on the same moving platform and the relative position is used to derive attitude information for the vehicle or tool.

1.2 Performance

Parameter	Specification	
Receiver type	Multi-band GNSS high precision receiver	
Accuracy of time pulse signal	RMS 99%	30 ns 60 ns
Frequency of time pulse signal		0.25 Hz to 10 MHz (configurable)
Operational limits[1]	Dynamics Altitude Velocity	≤ 4 g 50,000 m 500 m/s
Velocity accuracy[2]		0.05 m/s
Dynamic heading accuracy[2]		0.3 deg

GNSS		GPS+GLO+GAL+BDS	GPS+GLO+GAL	GPS+GAL	GPS+GLO	GPS+BDS	GPS
Acquisition[3]	Cold start	24 s	25 s	29 s	26 s	28 s	29 s
	Hot start	2 s	2 s	2 s	2 s	2 s	2 s
	Aided start[4]	2 s	2 s	2 s	2 s	2 s	2 s
Nav. update rate	RTK	8 Hz	10 Hz	15 Hz	15 Hz	15 Hz	20 Hz
	PVT	10 Hz	12 Hz	20 Hz	25 Hz	25 Hz	25 Hz
	RAW	20 Hz	20 Hz	25 Hz	25 Hz	25 Hz	25 Hz
Convergence time	RTK	< 10 s	< 10 s	< 10 s	< 10 s	< 10 s	< 30 s

Table 1: ZED-F9P performance in different GNSS modes

1 Assuming Airborne 4 g platform

2 50% @ 30 m/s for dynamic operation

3 Commanded starts. All satellites at -130 dBm.

4 Dependent on the speed and latency of the aiding data connection, commanded starts

5 Depends on atmospheric conditions, baseline length, GNSS antenna, multipath conditions, satellite visibility and geometry

Downloaded from Arrow.com.

GNSS		GPS+GLO+GAL+BDS	GPS+GLO+GAL	GPS+GAL	GPS+GLO	GPS+BDS	GPS
Horizontal pos. accuracy	PVT	1.5 m CEP	1.5 m CEP	1.5 m CEP	1.5 m CEP	1.5 m CEP	1.5 m CEP
	RTK[6]	0.01 m + 1 ppm CEP	0.01 m + 1 ppm CEP	0.01 m + 1 ppm CEP	0.01 m + 1 ppm CEP	0.01 m + 1 ppm CEP	0.01 m + 1 ppm CEP
Vertical pos. accuracy	RTK[6]	0.01 m CEP + 1 ppm	0.01 m CEP + 1 ppm	0.01 m CEP + 1 ppm	0.01 m CEP + 1 ppm	0.01 m CEP + 1 ppm	0.01 m CEP + 1 ppm

Table 2: ZED-F9P position accuracy in different GNSS modes

GNSS		GPS+GLO+GAL+BDS
Sensitivity[7]	Tracking and nav.	-167 dBm
	Reacquisition	-160 dBm
	Cold start	-148 dBm
	Hot start	-157 dBm

Table 3: ZED-F9P sensitivity

GNSS	GPS+GLO+GAL+BDS	GPS+GLO+GAL	GPS+GAL	GPS+GLO	GPS+BDS	GPS
Nav. update rate	5 Hz	5 Hz	8 Hz	8 Hz	8 Hz	10 Hz
Heading accuracy	0.4 deg	0.4 deg	0.4 deg	0.4 deg	0.4 deg	0.4 deg

Table 4: ZED-F9P moving base RTK performance in different GNSS modes

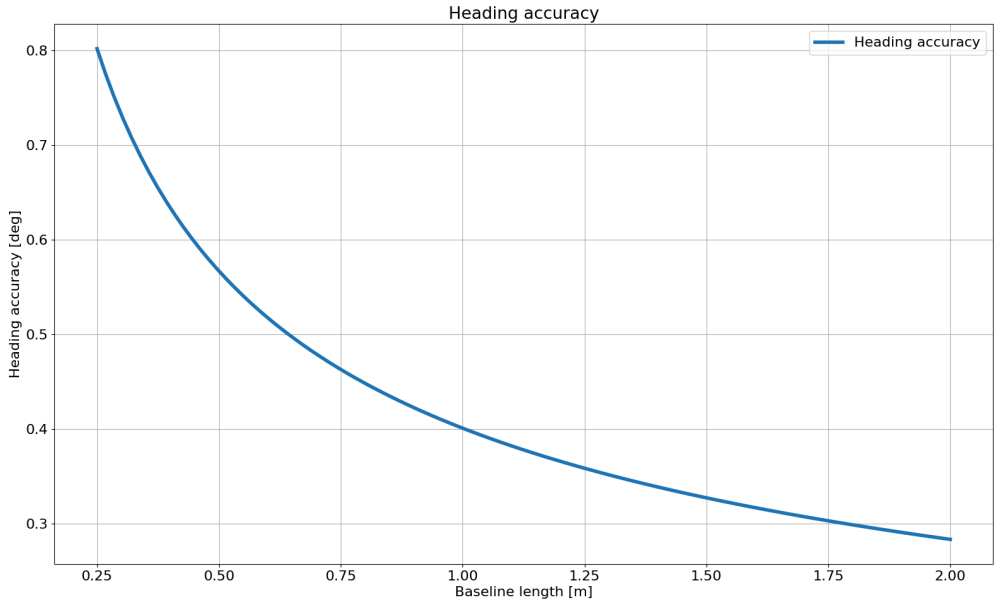

Figure 1: ZED-F9P moving base RTK heading accuracy versus baseline length

In a moving base application, and especially when the antennas are mounted on the same platform, it is recommended to use identical antennas. Furthermore it is recommended these antennas are mounted with identical orientation, as this will minimize effects of phase center variation.

6 Measured using 1 km baseline and patch antennas with good ground planes. Does not account for possible antenna phase center offset errors. ppm limited to baselines up to 20 km

7 Demonstrated with a good external LNA

Downloaded from Arrow.com.

The UBX-NAV-RELPOSNED message outputs baseline heading and baseline length measurements. For the UBX-NAV-RELPOSNED message specification, see the u-blox ZED-F9P Interface description [2].

1.3 Supported GNSS constellations

The ZED-F9P GNSS modules are concurrent GNSS receivers that can receive and track multiple GNSS constellations. Owing to the multi-band RF front-end architecture, all four major GNSS constellations (GPS, GLONASS, Galileo and BeiDou) plus QZSS satellites can be received concurrently. All satellites in view can be processed to provide an RTK navigation solution when used with correction data. If power consumption is a key factor, the receiver can be configured for a sub-set of GNSS constellations.

The QZSS system shares the same L1 and L2 frequency bands as GPS and can always be processed in conjunction with GPS.

To take advantage of multi-band signal reception, dedicated hardware preparation must be made during the design-in phase. See the ZED-F9P Integration manual [1] for u-blox design recommendations.

The ZED-F9P supports the GNSS and their signals as shown in Table 5.

GPS	GLONASS	Galileo	BeiDou
L1C/A (1575.42 MHz)	L1OF (1602 MHz + k*562.5 kHz, k = –7,..., 5, 6)	E1-B/C (1575.42 MHz)	B1I (1561.098 MHz)
L2C (1227.60 MHz)	L2OF (1246 MHz + k*437.5 kHz, k = –7,..., 5, 6)	E5b (1207.140 MHz)	B2I (1207.140 MHz)

Table 5: Supported GNSS and signals on ZED-F9P

The following GNSS assistance services can be activated on ZED-F9P:

AssistNow™ Online	AssistNow™ Offline	AssistNow™ Autonomous
Supported	-	-

Table 6: Supported Assisted GNSS (A-GNSS) services

1.4 Supported GNSS augmentation systems

1.4.1 Quasi-zenith satellite system (QZSS)

The Quasi-zenith satellite system (QZSS) is a regional navigation satellite system that transmits additional L1 C/A and L2C signals for the Pacific region covering Japan and Australia. The ZED-F9P high precision receiver is able to receive and track these signals concurrently with GPS L1 C/A and L2C signals, resulting in better availability especially under challenging signal conditions, e.g. in urban canyons.

☞ QZSS can be enabled only if GPS operation is also configured.

1.4.2 Differential GNSS (DGNSS)

When operating in RTK mode, RTCM version 3 messages are required and the module supports DGNSS according to RTCM 10403.3.

A ZED-F9P operating in rover mode can decode the following RTCM 3.3 messages:

Downloaded from Arrow.com.

Message Type	Description
RTCM 1001	L1-only GPS RTK observables
RTCM 1002	Extended L1-only GPS RTK observables
RTCM 1003	L1/L2 GPS RTK observables
RTCM 1004	Extended L1/L2 GPS RTK observables
RTCM 1005	Stationary RTK reference station ARP
RTCM 1006	Stationary RTK reference station ARP with antenna height
RTCM 1007	Antenna descriptor
RTCM 1009	L1-only GLONASS RTK observables
RTCM 1010	Extended L1-only GLONASS RTK observables
RTCM 1011	L1/L2 GLONASS RTK observables
RTCM 1012	Extended L1/L2 GLONASS RTK observables
RTCM 1033	Receiver and antenna description
RTCM 1074	GPS MSM4
RTCM 1075	GPS MSM5
RTCM 1077	GPS MSM7
RTCM 1084	GLONASS MSM4
RTCM 1085	GLONASS MSM5
RTCM 1087	GLONASS MSM7
RTCM 1094	Galileo MSM4
RTCM 1095	Galileo MSM5
RTCM 1097	Galileo MSM7
RTCM 1124	BeiDou MSM4
RTCM 1125	BeiDou MSM5
RTCM 1127	BeiDou MSM7
RTCM 1230	GLONASS code-phase biases
RTCM 4072.0	Reference station PVT (u-blox proprietary RTCM Message)
RTCM 4072.1	Additional reference station information (u-blox proprietary RTCM Message)

Table 7: Supported input RTCM 3.3 messages

A ZED-F9P operating as a base station can generate the following RTCM 3.3 output messages:

Message Type	Description
RTCM 1005	Stationary RTK reference station ARP
RTCM 1074	GPS MSM4
RTCM 1077	GPS MSM7
RTCM 1084	GLONASS MSM4
RTCM 1087	GLONASS MSM7
RTCM 1094	Galileo MSM4
RTCM 1097	Galileo MSM7
RTCM 1124	BeiDou MSM4
RTCM 1127	BeiDou MSM7
RTCM 1230	GLONASS code-phase biases
RTCM 4072.0	Reference station PVT (u-blox proprietary RTCM Message)
RTCM 4072.1	Additional reference station information (u-blox proprietary RTCM Message)

Table 8: Supported output RTCM 3.3 messages

Downloaded from Arrow.com.

1.5 Broadcast navigation data and satellite signal measurements

The ZED-F9P can output all the GNSS broadcast data upon reception from tracked satellites. This includes all the supported GNSS signals plus the augmentation service QZSS. The UBX-RXM-SFRBX message contains this information. The receiver also makes available the tracked satellite signal information, i.e. raw code phase and Doppler measurements, in a form aligned to the Radio Resource LCS Protocol (RRLP) [3]. For the UBX-RXM-SFRBX message specification, see the u-blox ZED-F9P Interface description [2].

1.5.1 Carrier-phase measurements

The ZED-F9P modules provide raw carrier phase data for all supported signals, along with pseudorange, Doppler and measurement quality information. The data contained in the UBX-RXM-RAWX message follows the conventions of a multi-GNSS RINEX 3 observation file. For the UBX-RXM-RAWX message specification, see the u-blox ZED-F9P Interface description [2].

☞ Raw measurement data are available once the receiver has established data bit synchronization and time-of-week.

1.6 Supported protocols

The ZED-F9P supports the following protocols:

Protocol	Type
UBX	Input/output, binary, u-blox proprietary
NMEA 4.10	Input/output, ASCII
RTCM 3.3	Input/output, binary

Table 9: Supported protocols

For specification of the protocols, see the u-blox ZED-F9P Interface description [2].

Downloaded from Arrow.com.

2 System description

2.1 Block diagram

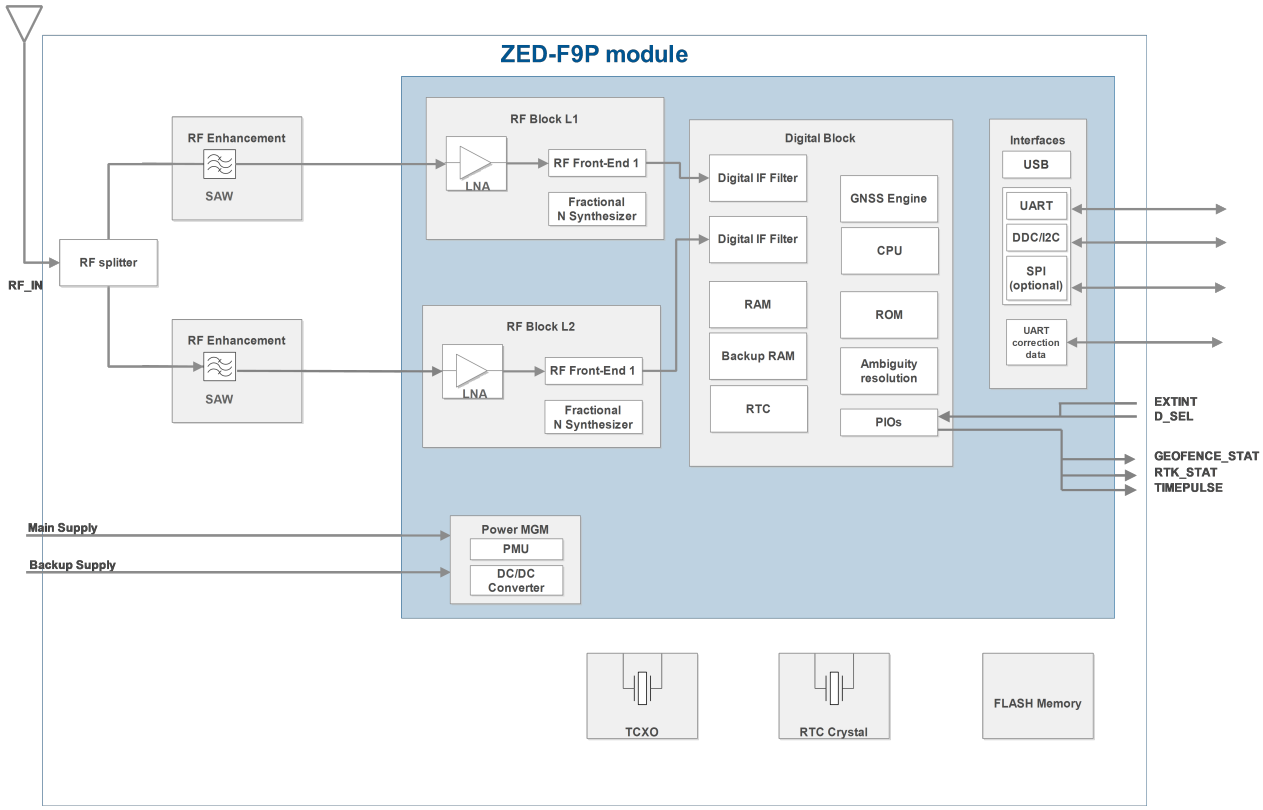

Figure 2: ZED-F9P block diagram

An active antenna is mandatory with the ZED-F9P. See the ZED-F9P Integration manual [1].

Downloaded from Arrow.com.

3 Pin definition

3.1 Pin assignment

The pin assignment of the ZED-F9P module is shown in Figure 3. The defined configuration of the PIOs is listed in Table 10.

For detailed information on pin functions and characteristics, see the u-blox ZED-F9P Integration manual [1].

☞ The ZED-F9P is an LGA package with the I/O on the outside edge and central ground pads.

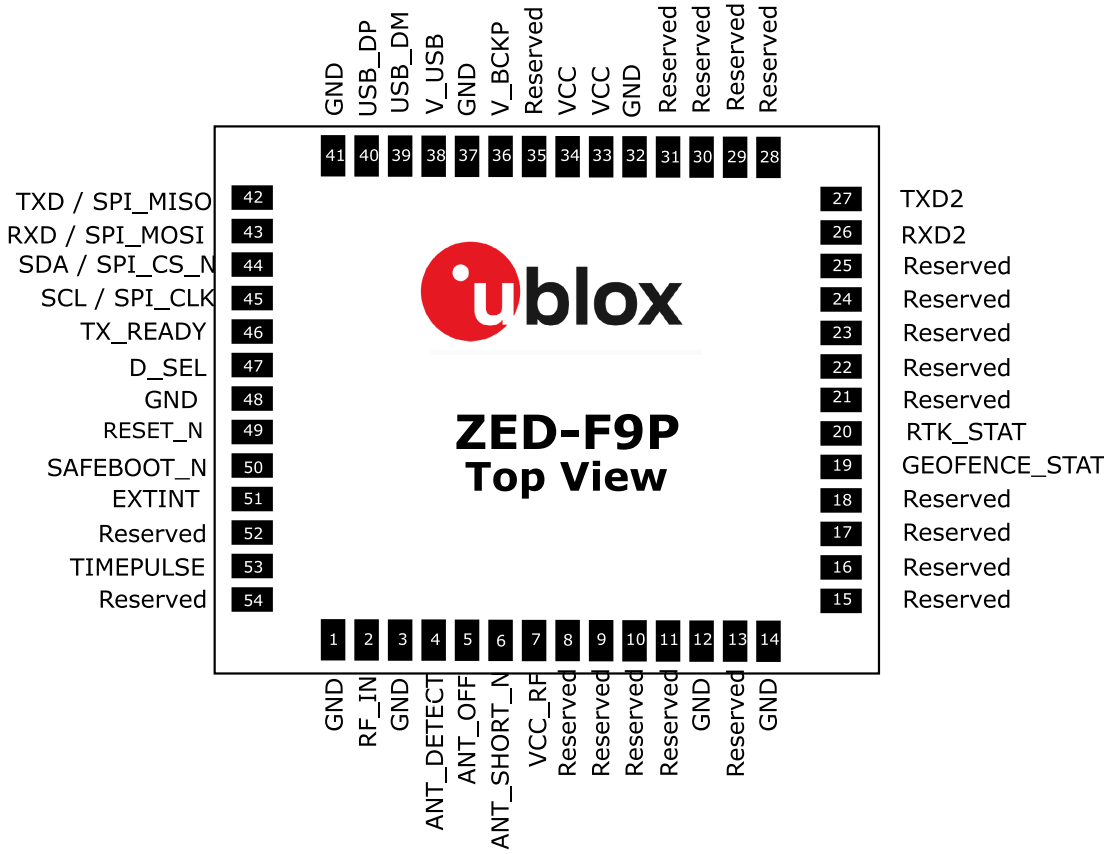

Figure 3: ZED-F9P pin assignment

Pin No	Name	I/O	Description
1	GND	-	Ground
2	RF_IN	I	RF input
3	GND	-	Ground
4	ANT_DETECT	I	Active antenna detect - default active high
5	ANT_OFF	O	External LNA disable - default active high
6	ANT_SHORT_N	I	Active antenna short detect - default active low
7	VCC_RF	O	Voltage for external LNA
8	Reserved	-	Reserved
9	Reserved	-	Reserved

Downloaded from Arrow.com.

Pin No	Name	I/O	Description
10	Reserved	-	Reserved
11	Reserved	-	Reserved
12	GND	-	Ground
13	Reserved	-	Reserved
14	GND	-	Ground
15	Reserved	-	Reserved
16	Reserved	-	Reserved
17	Reserved	-	Reserved
18	Reserved	-	Reserved
19	GEOFENCE_STAT	O	Geofence status, user defined
20	RTK_STAT	O	RTK status: 0 (RTK fixed), Blinking (receiving and using RTCM corrections), 1 (otherwise)
21	Reserved	-	Reserved
22	Reserved	-	Reserved
23	Reserved	-	Reserved
24	Reserved	-	Reserved
25	Reserved	-	Reserved
26	RXD2	I	Correction UART input
27	TXD2	O	Correction UART output
28	Reserved	-	Reserved
29	Reserved	-	Reserved
30	Reserved	-	Reserved
31	Reserved	-	Reserved
32	GND	-	Ground
33	VCC	I	Voltage supply
34	VCC	I	Voltage supply
35	Reserved	-	Reserved
36	V_BCKP	I	Backup supply voltage
37	GND	-	Ground
38	V_USB	I	USB supply
39	USB_DM	I/O	USB data
40	USB_DP	I/O	USB data
41	GND	-	Ground
42	TXD / SPI_MISO	O	Host UART output if D_SEL = 1(or open). SPI_MISO if D_SEL = 0
43	RXD / SPI_MOSI	I	Host UART input if D_SEL = 1(or open). SPI_MOSI if D_SEL = 0
44	SDA / SPI_CS_N	I/O	I2C Data if D_SEL = 1 (or open). SPI Chip Select if D_SEL = 0
45	SCL / SPI_CLK	I/O	I2C Clock if D_SEL = 1(or open). SPI Clock if D_SEL = 0
46	TX_READY	O	TX_Buffer full and ready for TX of data
47	D_SEL	I	Interface select for pins 42-45
48	GND	-	Ground
49	RESET_N	I	RESET_N
50	SAFEBOOT_N	I	SAFEBOOT_N (for future service, updates and reconfiguration, leave OPEN)
51	EXTINT	I	External Interrupt Pin
52	Reserved	-	Reserved

Downloaded from Arrow.com.

Pin No	Name	I/O	Description
53	TIMEPULSE	O	Time pulse
54	Reserved	-	Reserved

Table 10: ZED-F9P pin assignment

Downloaded from Arrow.com.

4 Electrical specification

The limiting values given are in accordance with the Absolute Maximum Rating System (IEC 134). Stress above one or more of the limiting values may cause permanent damage to the device. These are stress ratings only. Operation of the device at these or at any other conditions above those given below is not implied. Exposure to limiting values for extended periods may affect device reliability.

Where application information is given, it is advisory only and does not form part of the specification.

4.1 Absolute maximum ratings

Parameter	Symbol	Condition	Min	Max	Units
Power supply voltage	VCC		-0.5	3.6	V
Backup battery voltage	V_BCKP		-0.5	3.6	V
Input pin voltage	Vin	VCC ≤ 3.1 V	-0.5	VCC + 0.5	V
		VCC > 3.1 V	-0.5	3.6	V
VCC_RF output current	ICC_RF			100	mA
Supply voltage USB	V_USB		–0.5	3.6	V
USB signals	USB_DN, USB_DP		-0.5	V_USB + 0.5	V
Input power at RF_IN	Prfin	source impedance = 50 Ω, continuous wave		10	dBm
Storage temperature	Tstg		-40	+85	°C

Table 11: Absolute maximum ratings

The product is not protected against overvoltage or reversed voltages. Voltage spikes exceeding the power supply voltage specification, given in the table above, must be limited to values within the specified boundaries by using appropriate protection diodes.

4.2 Operating conditions

All specifications are at an ambient temperature of 25 °C. Extreme operating temperatures can significantly impact the specification values. Applications operating near the temperature limits should be tested to ensure the specification.

Parameter	Symbol	Min	Typical	Max	Units	Condition
Power supply voltage	VCC	2.7	3.0	3.6	V	
Backup battery voltage	V_BCKP	1.65		3.6	V	
Backup battery current	I_BCKP		36		µA	
SW backup current	I_SWBCKP		0.33		mA	
Input pin voltage range	Vin	0		VCC	V	
Digital IO pin low level input voltage	Vil			0.4	V	
Digital IO pin high level input voltage	Vih	0.8 * VCC			V	
Digital IO pin low level output voltage	Vol			0.4	V	Iol = 2 mA
Digital IO pin high level output voltage	Voh	VCC – 0.4			V	Ioh = 2 mA
DC current through any digital I/O pin (except supplies)	Ipin			5	mA	
VCC_RF voltage	VCC_RF		VCC - 0.1		V	
VCC_RF output current	ICC_RF			50	mA	

Downloaded from Arrow.com.

Parameter	Symbol	Min	Typical	Max	Units	Condition
Receiver chain noise figure[8]	NFtot		9.5		dB	
External gain (at RF_IN)	Ext_gain	17		50	dB	
Operating temperature	Topr	-40	+25	85	°C	

Table 12: Operating conditions

☞ Operation beyond the specified operating conditions can affect device reliability.

4.3 Indicative power requirements

Table 13 lists examples of the total system supply current including RF and baseband section for a possible application.

☞ Values in Table 13 are provided for customer information only, as an example of typical current requirements. Values are characterized on samples with using a command cold start. Actual power requirements can vary depending on FW version used, external circuitry, number of SVs tracked, signal strength, type and time of start, duration, and conditions of test.

Symbol	Parameter	Conditions	GPS+GLO +GAL+BDS	GPS	Unit
I_{PEAK}	Peak current	Acquisition	130	120	mA
I_{VCC}[9]	VCC current	Acquisition	90	75	mA
I_{supply}[9]	Supply current	Tracking	85	68	mA

Table 13: Currents to calculate the indicative power requirements

All values in Table 13 are measured at 25 °C ambient temperature.

8 Only valid for the GPS

9 Simulated GNSS signal

Downloaded from Arrow.com.

5 Communications interfaces

There are several communications interfaces including UART, SPI, I2C[10] and USB.

All the inputs have internal pull-up resistors in normal operation and can be left open if not used. All the PIOs are supplied by VCC, therefore all the voltage levels of the PIO pins are related to VCC supply voltage.

5.1 UART interface

There are two UART interfaces: UART1 and UART2. UART1 and UART2 operate up to and including a speed of 921600 baud. No hardware flow control on UART1 and UART2 is supported.

UART1 is enabled by default if D_SEL = 1 or unconnected.

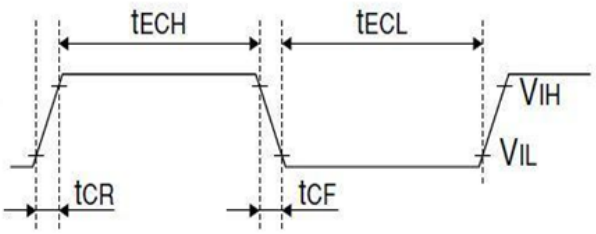

Figure 4: ZED-F9P high precision receiver UART timing specifications

Symbol	Parameter	Min	Max	Unit
t_{ECH}	High period of external data input	0	0.4	µs
t_{ECL}	Low period of external data input	TBA	TBA	µs
R_u	Baud rate	9600	921600	bd
t_{CR}	Rise time of data		5	ns
t_{CF}	Fall time of data		5	ns

Table 14: ZED-F9P UART timings and specifications

5.2 SPI interface

The ZED-F9P has an SPI slave interface that can be selected by setting D_SEL = 0. The SPI slave interface is shared with UART1. The SPI pins available are: SPI_MISO (TXD), SPI_MOSI (RXD), SPI_CS_N, SPI_CLK. The SPI interface is designed to allow communication to a host CPU. The interface can be operated in slave mode only. Note that SPI is not available in the default configuration because its pins are shared with the UART and I2C interfaces. The maximum transfer rate using SPI is 125 kB/s and the maximum SPI clock frequency is 5.5 MHz.

This section provides SPI timing values for the ZED-F9P slave operation. The following tables present timing values under different capacitive loading conditions. Default SPI configuration is CPOL = 0 and CPHA = 0.

[10] I2C is a registered trademark of Philips/NXP

Downloaded from Arrow.com.

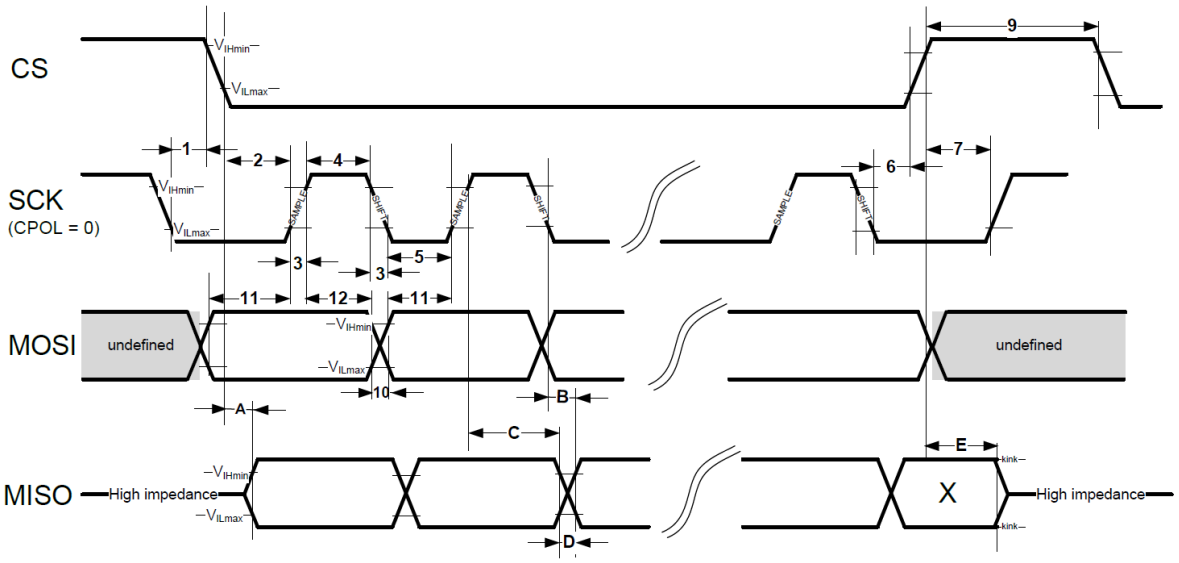

Figure 5: ZED-F9P high precision receiver SPI specification mode 1: CPHA=0 SCK = 5.33 MHz

Timings 1 - 12 are not specified here as those are depending on SPI master. Timings A - E are specified for SPI slave.

Timing value at 2 pF load	Min (ns)	Max (ns)
"A" - MISO data valid time (CS)	14	38
"B" - MISO data valid time (SCK) weak driver mode	21	38
"C" - MISO data hold time	114	130
"D" - MISO rise/fall time, weak driver mode	1	4
"E" - MISO data disable lag time	20	32

Table 15: ZED-F9P SPI timings at 2pF load

Timing value at 20 pF load	Min (ns)	Max (ns)
"A" - MISO data valid time (CS)	19	52
"B" - MISO data valid time (SCK) weak driver mode	25	51
"C" - MISO data hold time	117	137
"D" - MISO rise/fall time, weak driver mode	6	16
"E" - MISO data disable lag time	20	32

Table 16: ZED-F9P SPI timings at 20pF load

Timing value at 60 pF load	Min (ns)	Max (ns)
"A" - MISO data valid time (CS)	29	79
"B" - MISO data valid time (SCK) weak driver mode	35	78
"C" - MISO data hold time	122	152
"D" - MISO rise/fall time, weak driver mode	15	41
"E" - MISO data disable lag time	20	32

Table 17: ZED-F9P SPI timings at 60pF load

5.3 Slave I2C interface

An I2C compliant interface is available for communication with an external host CPU. The interface can be operated in slave mode only. It is fully compatible with Fast-Mode of the I2C industry

Downloaded from Arrow.com.

standard. Since the maximum SCL clock frequency is 400 kHz, the maximum bit rate is 400 kbit/s. The interface stretches the clock when slowed down while serving interrupts, therefore the real bit rates may be slightly lower.

☞ The I2C interface is only available with the UART default mode. If the SPI interface is selected by using D_SEL = 0, the I2C interface is not available.

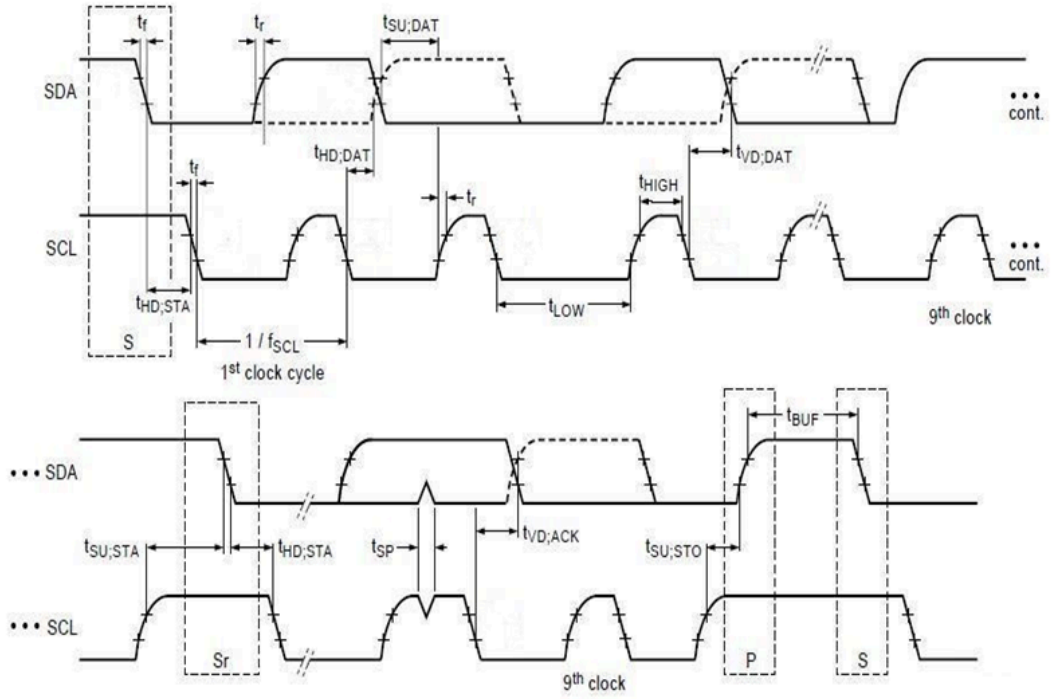

Figure 6: ZED-F9P high precision receiver I2C slave specification

Symbol	Parameter	Min (Standard / Fast-mode)	Max	Unit
f_{SCL}	SCL clock frequency	0	400	kHz
$t_{HD;STA}$	Hold time (repeated) START condition	4.0/1	-	µs
t_{LOW}	Low period of the SCL clock	5/2	-	µs
t_{HIGH}	High period of the SCL clock	4.0/1	-	µs
$t_{SU;STA}$	Set-up time for a repeated START condition	5/1	-	µs
$t_{HD;DAT}$	Data hold time	0/0	-	µs
$t_{SU;DAT}$	Data set-up time	250/100		ns
t_r	Rise time of both SDA and SCL signals	-	1000/300 (for C = 400pF)	ns
t_f	Fall time of both SDA and SCL signals	-	300/300 (for C = 400pF)	ns
$t_{SU;STO}$	Set-up time for STOP condition	4.0/1	-	µs
t_{BUF}	Bus free time between a STOP and START condition	5/2	-	µs
$t_{VD;DAT}$	Data valid time	-	4/1	µs
$t_{VD;ACK}$	Data valid acknowledge time	-	4/1	µs
V_{nL}	Noise margin at the low level	0.1 VCC	-	V
V_{nH}	Noise margin at the high level	0.2 VCC	-	V

Table 18: ZED-F9P I2C slave timings and specifications

Downloaded from Arrow.com.

5.4 USB interface

A USB interface, which is compatible to USB version 2.0 FS (Full Speed, 12 Mbit/s), can be used for communication to a host. The V_USB pin supplies the USB interface.

5.5 Default interface settings

Interface	Settings
UART1 output	38400 baud, 8 bits, no parity bit, 1 stop bit. NMEA protocol enabled and **GGA, GLL, GSA, GSV, RMC, VTG, TXT** messages are output by default. UBX and RTCM 3.3 protocols are enabled but no output messages are enabled.
UART1 input	38400 baud, 8 bits, no parity bit, 1 stop bit. UBX, NMEA and RTCM 3.3 input protocols are enabled by default.
UART2 output	38400 baud, 8 bits, no parity bit, 1 stop bit. UBX protocol cannot be enabled on UART2. RTCM 3.3 protocol is enabled by default but no output messages are enabled. NMEA protocol is not enabled by default, it can be enabled and output messages can be enabled.
UART2 input	38400 baud, 8 bits, no parity bit, 1 stop bit. UBX protocol cannot be enabled on UART2, will not receive UBX input messages. RTCM 3.3 protocol enabled by default. NMEA protocol disabled by default but can be enabled.
USB output	NMEA protocol enabled and **GGA, GLL, GSA, GSV, RMC, VTG, TXT** messages are output by default. UBX protocol is enabled but no messages are output by default. RTCM 3.3 protocol enabled but no messages are output by default.
USB input	UBX, NMEA, RTCM 3.3 protocols enabled by default.
I2C	Fully compatible with the I2C[11] industry standard, available for communication with an external host CPU or u-blox cellular modules, operated in slave mode only. Default messages activated as in UART1. Input/output protocols available as in UART1. Maximum bit rate 400 kb/s.
SPI	Allow communication to a host CPU, operated in slave mode only. Default messages activated as in UART1. Input/output protocols available as in UART1. SPI is not available unless D_SEL pin is set to low (see section D_SEL interface in ZED-F9P Integration manual [1]).

Table 19: Default interface settings

☞ Refer to the u-blox ZED-F9P Interface description [2] for information about further settings.

By default the ZED-F9P outputs NMEA 4.10 messages that include satellite data for all GNSS bands being received. This results in a high NMEA load output for each navigation period. Make sure the UART1 baud rate being used is sufficient for the selected navigation rate and the number of GNSS signals being received.

[11] I2C is a registered trademark of Philips/NXP

Downloaded from Arrow.com.

6 Mechanical specification

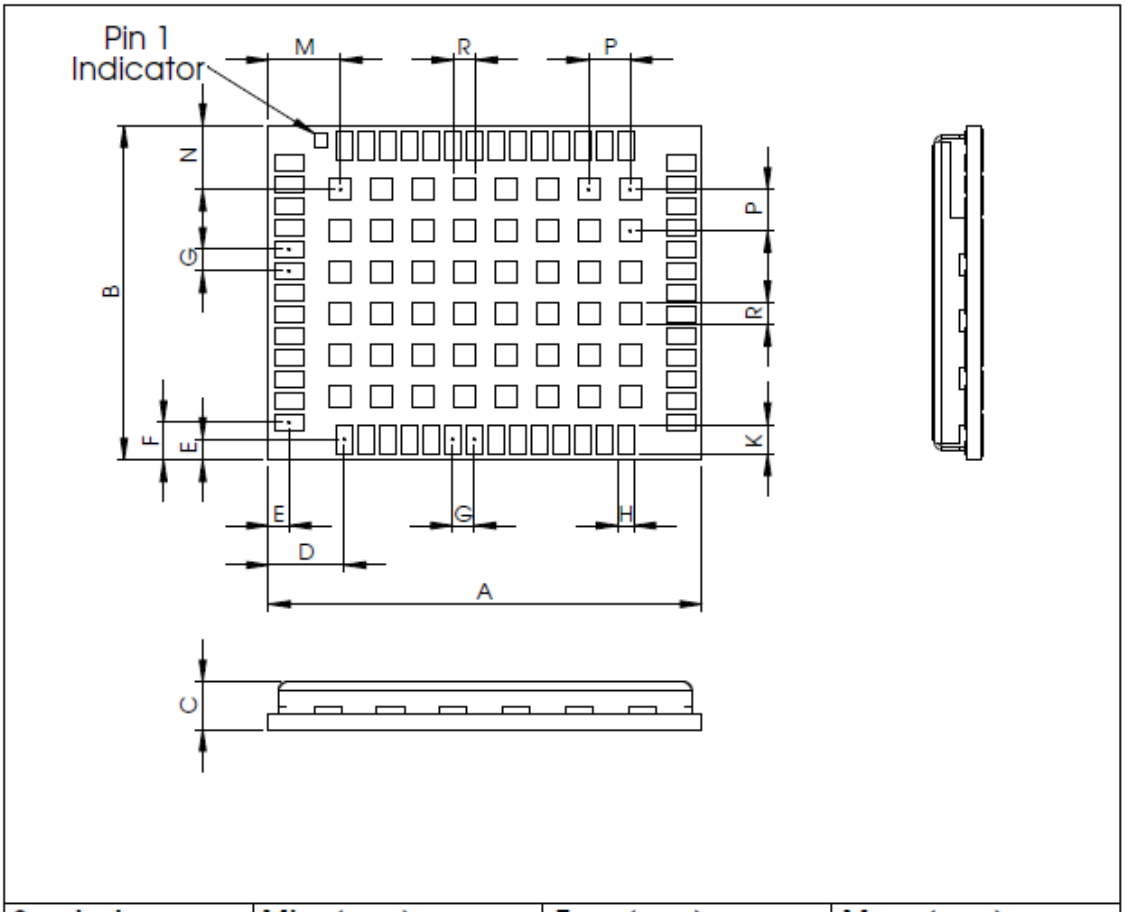

Symbol	Min. (mm)	Typ. (mm)	Max. (mm)
A	21.80	22.00	22.35
B	16.80	17.00	17.20
C	2.20	2.40	2.60
D	3.65	3.85	4.05
E	0.85	1.05	1.25
F	1.70	1.90	2.10
G	1.05	1.10	1.15
H	0.70	0.80	0.96
K	1.20	1.50	1.80
M	3.45	3.65	3.85
N	3.05	3.25	3.45
P	2.05	2.10	2.15
R	0.88	1.10	1.32
Weight		1.85g	

Figure 7: ZED-F9P mechanical drawing

Downloaded from Arrow.com.

7 Reliability tests and approvals

ZED-F9P modules are based on AEC-Q100 qualified GNSS chips.

Tests for product family qualifications are according to ISO 16750 "Road vehicles – environmental conditions and testing for electrical and electronic equipment", and appropriate standards.

7.1 Approvals



The ZED-F9P is designed to in compliance with the essential requirements and other relevant provisions of Radio Equipment Directive (RED) 2014/53/EU.

The ZED-F9P complies with the Directive 2011/65/EU (EU RoHS 2) and its amendment Directive (EU) 2015/863 (EU RoHS 3).

Declaration of Conformity (DoC) is available on the u-blox website.

Downloaded from Arrow.com.

8 Labeling and ordering information

This section provides information about product labeling and ordering. For information about product handling and soldering see the ZED-F9P Integration manual [1].

8.1 Product labeling

The labeling of the ZED-F9P modules provides product information and revision information. For more information contact u-blox sales.

8.2 Explanation of product codes

Three different product code formats are used. The **Product name** is used in documentation such as this data sheet and identifies all u-blox products, independent of packaging and quality grade. The **Ordering code** includes options and quality, while the **Type number** includes the hardware and firmware versions. Table 20 below details these three different formats.

Format	Structure	Code for this product
Product name	PPP-TGV	ZED-F9P
Ordering code	PPP-TGV-NNQ	ZED-F9P-01B
Type number	PPP-TGV-NNQ-XX	ZED-F9P-01B-01

Table 20: Product code formats

The parts of the product code are explained in Table 21.

Code	Meaning	Example
PPP	Product family	ZED
TG	Platform	F9 = u-blox F9
V	Variant	P = High precision
NNQ	Option / Quality grade	NN: Option [00...99] Q: Grade, A = Automotive, B = Professional
XX	Product detail	Describes hardware and firmware versions

Table 21: Part identification code

8.3 Ordering codes

Ordering code	Product	Remark
ZED-F9P-01B	ZED-F9P	Product shipped with the latest firmware (currently FW 1.00 HPG 1.12).
ZED-F9P-00B	ZED-F9P	Product with this ordering code is End-Of-Life. The product is shipped with FW 1.00 HPG 1.11. Details in product change note UBX-19026694

Table 22: Product ordering codes

☞ Product changes affecting form, fit or function are documented by u-blox. For a list of Product Change Notifications (PCNs) see our website at: https://www.u-blox.com/en/product-resources.

Downloaded from Arrow.com.

Related documents

[1] ZED-F9P Integration manual, doc. no. UBX-18010802
[2] ZED-F9P Interface description, doc. no. UBX-18010854
[3] Radio Resource LCS Protocol (RRLP), (3GPP TS 44.031 version 11.0.0 Release 11)
[4] ZED-F9P Moving Base application note, doc. no. UBX-19009093

☞ For regular updates to u-blox documentation and to receive product change notifications please register on our homepage (http://www.u-blox.com).

Downloaded from Arrow.com.

Revision history

Revision	Date	Name	Status / comments
R01	21-May-2018	ghun/jhak	Objective specification
R02	18-Sep-2018	ghun	Advance information
R03	20-Dec-2018	ghun	Advance information - Table 4.1, Input power at RF_IN reduced to 10 dBm
R04	26-Feb-2019	ghun	Early production information. Mechanical specification figure updated.
R05	11-July-2019	jhak/ghun	HPG 1.12 and ZED-F9P-01B update
R06	15-Jan-2020	ghun	Early production information - PCN UBX-19057484 added and module type number updated.
R07	20-Feb-2020	jhak	Absolute maximum ratings and Operating conditions tables updated.

Downloaded from Arrow.com.

Contact

For complete contact information visit us at www.u-blox.com.

u-blox Offices

North, Central and South America

u-blox America, Inc.
Phone: +1 703 483 3180
E-mail: info_us@u-blox.com

Regional Office West Coast
Phone: +1 408 573 3640
E-mail: info_us@u-blox.com

Technical Support
Phone: +1 703 483 3185
E-mail: support_us@u-blox.com

Headquarters

Europe, Middle East, Africa

u-blox AG
Phone: +41 44 722 74 44
E-mail: info@u-blox.com
Support: support@u-blox.com

Asia, Australia, Pacific

u-blox Singapore Pte. Ltd.
Phone: +65 6734 3811
E-mail: info_ap@u-blox.com
Support: support_ap@u-blox.com

Regional Office Australia
Phone: +61 2 8448 2016
E-mail: info_anz@u-blox.com
Support: support_ap@u-blox.com

Regional Office China (Beijing)
Phone: +86 10 68 133 545
E-mail: info_cn@u-blox.com
Support: support_cn@u-blox.com

Regional Office China (Chongqing)
Phone: +86 23 6815 1588
E-mail: info_cn@u-blox.com
Support: support_cn@u-blox.com

Regional Office China (Shanghai)
Phone: +86 21 6090 4832
E-mail: info_cn@u-blox.com
Support: support_cn@u-blox.com

Regional Office China (Shenzhen)
Phone: +86 755 8627 1083
E-mail: info_cn@u-blox.com
Support: support_cn@u-blox.com

Regional Office India
Phone: +91 80 4050 9200
E-mail: info_in@u-blox.com
Support: support_in@u-blox.com

Regional Office Japan (Osaka)
Phone: +81 6 6941 3660
E-mail: info_jp@u-blox.com
Support: support_jp@u-blox.com

Regional Office Japan (Tokyo)
Phone: +81 3 5775 3850
E-mail: info_jp@u-blox.com
Support: support_jp@u-blox.com

Regional Office Korea
Phone: +82 2 542 0861
E-mail: info_kr@u-blox.com
Support: support_kr@u-blox.com

Regional Office Taiwan
Phone: +886 2 2657 1090
E-mail: info_tw@u-blox.com
Support: support_tw@u-blox.com

Downloaded from Arrow.com.