TinyLogic ULP-A AND Gate

NC7SP08

The NC7SP08 is a single 2–input AND gate in tiny footprint packages. The device is designed to operate for V_{CC} = 0.9 V to 3.6 V.

Features

- Designed for 0.9 V to 3.6 V V_{CC} Operation
- 2.3 ns t_{PD} at 3.3 V (Typ)
- Inputs/Outputs Over–Voltage Tolerant up to 3.6 V
- I_{OFF} Supports Partial Power Down Protection
- Source/Sink 2.6 mA at 3.3 V
- Available in SC–88A and MicroPak™ Packages
- These Devices are Pb–Free, Halogen Free/BFR Free and are RoHS Compliant

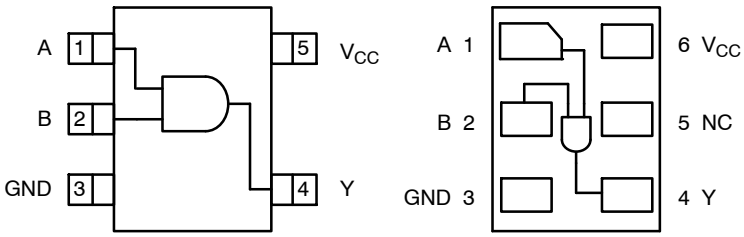

SC–88A MicroPak

Figure 1. Pinout Diagrams (Top Views)

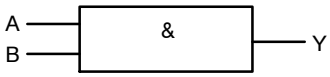

Figure 2. Logic Symbol

MARKING DIAGRAMS

SIP6 1.45X1.0 MicroPak CASE 127EB

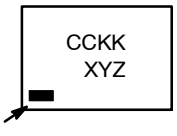

UDFN6 MicroPak2 CASE 517DP

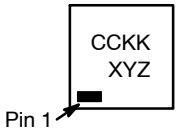

CC = Specific Device Code
KK = 2–Digit Lot Run Traceability Code
XY = 2–Digit Date Code
Z = Assembly Plant Code

SC–88A CASE 419AC

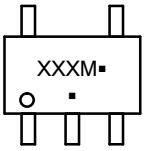

XXX = Specific Device Code
M = Date Code
▪ = Pb–Free Package

ORDERING INFORMATION

See detailed ordering, marking and shipping information on page 6 of this data sheet.

NOTE: Some of the devices on this data sheet have been **DISCONTINUED**. Please refer to the table on page 6.

PIN ASSIGNMENT

Pin	SC88A	MicroPak
1	A	A
2	B	B
3	GND	GND
4	Y	Y
5	V_{CC}	N.C.
6	–	V_{CC}

N.C. = No Connect

FUNCTION TABLE

Input		Output
A	B	Y
L	L	L
L	H	L
H	L	L
H	H	H

© Semiconductor Components Industries, LLC, 2001

Downloaded from Arrow.com.

MAXIMUM RATINGS

Symbol	Characteristics		Value	Unit
V_{CC}	DC Supply Voltage		−0.5 to +4.3	V
V_{IN}	DC Input Voltage		−0.5 to +4.3	V
V_{OUT}	DC Output Voltage	Active−Mode (High or Low State) Tri−State Mode (Note 1) Power−Down Mode (V_{CC} = 0 V)	−0.5 to V_{CC} + 0.5 −0.5 to +4.3 −0.5 to +4.3	V
I_{IK}	DC Input Diode Current	V_{IN} < GND	−50	mA
I_{OK}	DC Output Diode Current	V_{OUT} < GND	−50	mA
I_{OUT}	DC Output Source/Sink Current		±50	mA
I_{CC} or I_{GND}	DC Supply Current per Supply Pin or Ground Pin		±50	mA
T_{STG}	Storage Temperature Range		−65 to +150	°C
T_L	Lead Temperature, 1 mm from Case for 10 Seconds		260	°C
T_J	Junction Temperature Under Bias		+150	°C
θ_{JA}	Thermal Resistance (Note 2)	SC−88A MicroPak	377 154	°C/W
P_D	Power Dissipation in Still Air	SC−88A MicroPak	332 812	mW
MSL	Moisture Sensitivity		Level 1	–
F_R	Flammability Rating	Oxygen Index: 28 to 34	UL 94 V−0 @ 0.125 in	–
V_{ESD}	ESD Withstand Voltage (Note 3)	Human Body Model Charged Device Model	2000 1000	V
$I_{Latchup}$	Latchup Performance (Note 4)		±100	mA

Stresses exceeding those listed in the Maximum Ratings table may damage the device. If any of these limits are exceeded, device functionality should not be assumed, damage may occur and reliability may be affected.

1. Applicable to devices with outputs that may be tri−stated.
2. Measured with minimum pad spacing on an FR4 board, using 10 mm−by−1 inch, 2 ounce copper trace no air flow per JESD51−7.
3. HBM tested to EIA / JESD22−A114−A. CDM tested to JESD22−C101−A. JEDEC recommends that ESD qualification to EIA/JESD22−A115A (Machine Model) be discontinued.
4. Tested to EIA/JESD78 Class II.

RECOMMENDED OPERATING CONDITIONS

Symbol	Parameter		Min	Max	Unit
V_{CC}	Positive DC Supply Voltage		0.9	3.6	V
V_{IN}	DC Input Voltage		0	3.6	V
V_{OUT}	DC Output Voltage	Active−Mode (High or Low State) Tri−State Mode (Note 1) Power−Down Mode (V_{CC} = 0 V)	0 0 0	V_{CC} 3.6 3.6	
T_A	Operating Temperature Range		−40	+85	°C
t_r , t_f	Input Transition Rise and Fall Time	V_{CC} = 3.3 V ± 0.3 V	0	10	ns/V

Functional operation above the stresses listed in the Recommended Operating Ranges is not implied. Extended exposure to stresses beyond the Recommended Operating Ranges limits may affect device reliability.

Share Feedback
Your Opinion Matters

Downloaded from Arrow.com.

DC ELECTRICAL CHARACTERISTICS

Symbol	Parameter	Condition	V_{CC} (V)	T_A = 25°C			T_A = −40°C to +85°C		Unit
				Min	Typ	Max	Min	Max	
V_{IH}	High−Level Input Voltage		0.9	–	0.5	–	–	–	V
			1.1 to 1.3	0.65 x V_{CC}	–	–	0.65 x V_{CC}	–	
			1.4 to 1.6	0.65 x V_{CC}	–	–	0.65 x V_{CC}	–	
			1.65 to 1.95	0.65 x V_{CC}	–	–	0.65 x V_{CC}	–	
			2.3 to 2.7	1.6	–	–	1.6	–	
			3.0 to 3.6	2.1	–	–	2.1	–	
V_{IL}	Low−Level Input Voltage		0.9	–	0.5	–	–	–	V
			1.1 to 1.3	–	–	0.35 x V_{CC}	–	0.35 x V_{CC}	
			1.4 to 1.6	–	–	0.35 x V_{CC}	–	0.35 x V_{CC}	
			1.65 to 1.95	–	–	0.35 x V_{CC}	–	0.35 x V_{CC}	
			2.3 to 2.7	–	–	0.7	–	0.7	
			3.0 to 3.6	–	–	0.9	–	0.9	
V_{OH}	High−Level Output Voltage	V_{IN} = V_{IH} or V_{IL}							V
		I_{OH} = −20 μA	0.9	–	V_{CC} − 0.1	–	–	–	
			1.1 to 1.3	V_{CC} − 0.1	–	–	V_{CC} − 0.1	–	
			1.4 to 1.6	V_{CC} − 0.1	–	–	V_{CC} − 0.1	–	
			1.65 to 1.95	V_{CC} − 0.1	–	–	V_{CC} − 0.1	–	
			2.3 to 2.7	V_{CC} − 0.1	–	–	V_{CC} − 0.1	–	
			3.0 to 3.6	V_{CC} − 0.1	–	–	V_{CC} − 0.1	–	
		I_{OH} = −0.5 mA	1.1 to 1.3	0.75 x V_{CC}	–	–	0.70 x V_{CC}	–	
		I_{OH} = −1 mA	1.4 to 1.6	1.07	–	–	0.99	–	
		I_{OH} = −1.5 mA	1.65 to 1.95	1.24	–	–	1.22	–	
		I_{OH} = −2.1 mA	2.3 to 2.7	1.95	–	–	1.87	–	
		I_{OH} = −2.6 mA	3.0 to 3.6	2.61	–	–	2.55	–	
V_{OL}	Low−Level Output Voltage	V_{IN} = V_{IH} or V_{IL}							V
		I_{OL} = 20 μA	0.9	–	0.1	–	–	–	
			1.1 to 1.3	–	–	0.1	–	0.1	
			1.4 to 1.6	–	–	0.1	–	0.1	
			1.65 to 1.95	–	–	0.1	–	0.1	
			2.3 to 2.7	–	–	0.1	–	0.1	
			3.0 to 3.6	–	–	0.1	–	0.1	
		I_{OL} = 0.5 mA	1.1 to 1.3	–	–	0.3 x V_{CC}	–	0.3 x V_{CC}	
		I_{OL} = 1 mA	1.4 to 1.6	–	–	0.31	–	0.37	
		I_{OL} = 1.5 mA	1.65 to 1.95	–	–	0.31	–	0.35	
		I_{OL} = 2.1 mA	2.3 to 2.7	–	–	0.31	–	0.33	
		I_{OL} = 2.6 mA	3.0 to 3.6	–	–	0.31	–	0.33	
I_{IN}	Input Leakage Current	V_{IN} = 0 V to 3.6 V	0.9 to 3.6	–	–	±0.1	–	±0.5	μA
I_{OFF}	Power Off Leakage Current	V_{IN} = 0 V to 3.6 V or V_{OUT} = 0 V to 3.6 V	0	–	–	0.5	–	0.5	μA
I_{CC}	Quiescent Supply Current	V_{IN} = V_{CC} or GND	0.9 to 3.6	–	–	0.9	–	0.9	μA

Product parametric performance is indicated in the Electrical Characteristics for the listed test conditions, unless otherwise noted. Product performance may not be indicated by the Electrical Characteristics if operated under different conditions.

Share Feedback
Your Opinion Matters

Downloaded from Arrow.com.

AC ELECTRICAL CHARACTERISTICS

Symbol	Parameter	Condition	V_{CC} (V)	T_A = 25°C			T_A = −40°C to +85°C		Unit
				Min	Typ	Max	Min	Max	
t_{PLH}, t_{PHL}	Propagation Delay, (A or B) to Y (Figures 3 and 4)	R_L = 1 MΩ, C_L = 10 pF	0.9	–	59.4	–	–	–	ns
			1.10 to 1.30	–	14.4	38.7	–	46.4	
			1.40 to 1.60	–	6.2	14.8	–	15.0	
			1.65 to 1.95	–	4.4	12.0	–	12.2	
			2.3 to 2.7	–	2.9	9.4	–	9.9	
			3.0 to 3.6	–	2.3	8.3	–	9.0	
t_{PLH}, t_{PHL}	Propagation Delay, (A or B) to Y (Figures 3 and 4)	R_L = 1 MΩ, C_L = 15 pF	0.9	–	60.9	–	–	–	ns
			1.10 to 1.30	–	15.1	40.3	–	48.3	
			1.40 to 1.60	–	6.6	15.5	–	16.5	
			1.65 to 1.95	–	4.8	12.6	–	13.6	
			2.3 to 2.7	–	3.2	9.9	–	10.8	
			3.0 to 3.6	–	2.5	8.7	–	9.5	
t_{PLH}, t_{PHL}	Propagation Delay, (A or B) to Y (Figures 3 and 4)	R_L = 1 MΩ, C_L = 30 pF	0.9	–	65.2	–	–	–	ns
			1.10 to 1.30	–	17.2	45.1	–	53.8	
			1.40 to 1.60	–	7.9	17.8	–	18.2	
			1.65 to 1.95	–	5.8	14.4	–	15.9	
			2.3 to 2.7	–	3.9	11.3	–	12.8	
			3.0 to 3.6	–	3.1	9.2	–	10.7	

CAPACITIVE CHARACTERISTICS

Symbol	Parameter	Test Condition	Typical (T_A = 25°C)	Unit
C_{IN}	Input Capacitance	V_{CC} = 0 V	2.0	pF
C_{PD}	Power Dissipation Capacitance (Note 5)	f = 10 MHz, V_{CC} = 0.9 to 3.6 V, V_{IN} = 0 V or V_{CC}	8.0	pF

5. C_{PD} is defined as the value of the internal equivalent capacitance which is calculated from the operating current consumption without load. Average operating current can be obtained by the equation $I_{CC(OPR)} = C_{PD} \bullet V_{CC} \bullet f_{in} + I_{CC}$. C_{PD} is used to determine the no−load dynamic power consumption: $P_D = C_{PD} \bullet V_{CC}^2 \bullet f_{in} + I_{CC} \bullet V_{CC}$.

Share Feedback
Your Opinion Matters

Downloaded from Arrow.com.

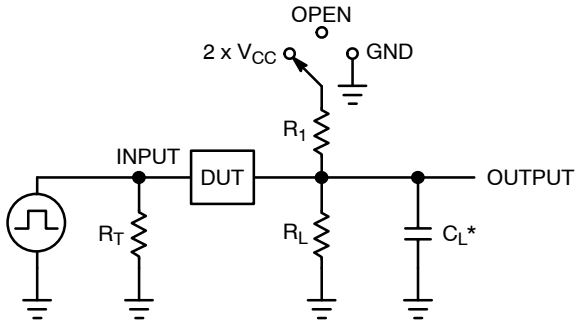

C_L includes probe and jig capacitance
R_T is Z_{OUT} of pulse generator (typically 50 Ω)
f = 1 MHz

Test	Switch Position
t_{PLH} / t_{PHL}	Open
t_{PLZ} / t_{PZL}	2 x V_{CC}
t_{PHZ} / t_{PZH}	GND

Figure 3. Test Circuit

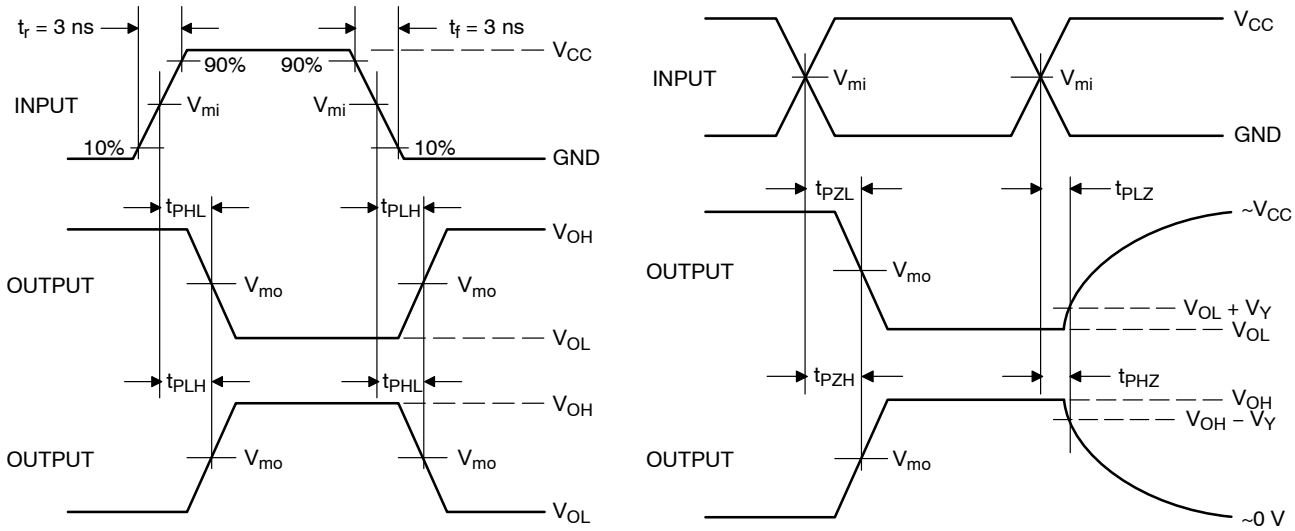

V_{CC}, V	V_{mi}, V	V_{mo}, V	V_Y, V
0.9	V_{CC} / 2	V_{CC} / 2	0.1
1.1 to 1.3	V_{CC} / 2	V_{CC} / 2	0.1
1.4 to 1.6	V_{CC} / 2	V_{CC} / 2	0.1
1.65 to 1.95	V_{CC} / 2	V_{CC} / 2	0.15
2.3 to 2.7	V_{CC} / 2	V_{CC} / 2	0.15
3.0 to 3.6	1.5	1.5	0.3

Figure 4. Switching Waveforms

Share Feedback
Your Opinion Matters

Downloaded from Arrow.com.

ORDERING INFORMATION

Device	Package	Marking	Pin 1 Orientation (See below)	Shipping†
NC7SP08L6X	MicroPak	J9	Q4	5000 / Tape & Reel

DISCONTINUED (Note 6)

NC7SP08FHX	MicroPak2	J9	Q4	5000 / Tape & Reel
NC7SP08P5X	SC−88A	P08	Q4	3000 / Tape & Reel

†For information on tape and reel specifications, including part orientation and tape sizes, please refer to our Tape and Reel Packaging Specifications Brochure, BRD8011/D.

6. **DISCONTINUED:** These devices are not recommended for new design. Please contact your **onsemi** representative for information. The most current information on these devices may be available on www.onsemi.com.

PIN 1 ORIENTATION IN TAPE AND REEL

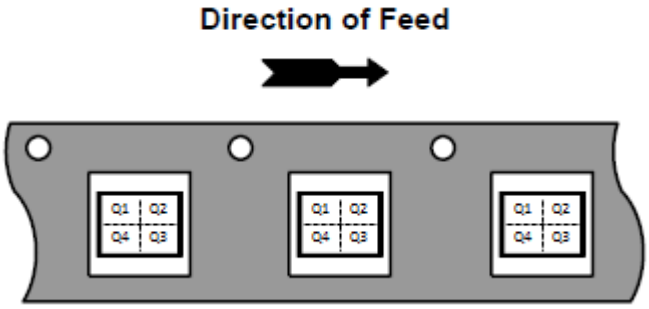

MicroPak is trademark of Semiconductor Components Industries, LLC (SCILLC) or its subsidiaries in the United States and/or other countries.

Share Feedback
Your Opinion Matters

Downloaded from Arrow.com.

SIP6 1.45X1.0
CASE 127EB
ISSUE O

DATE 31 AUG 2016

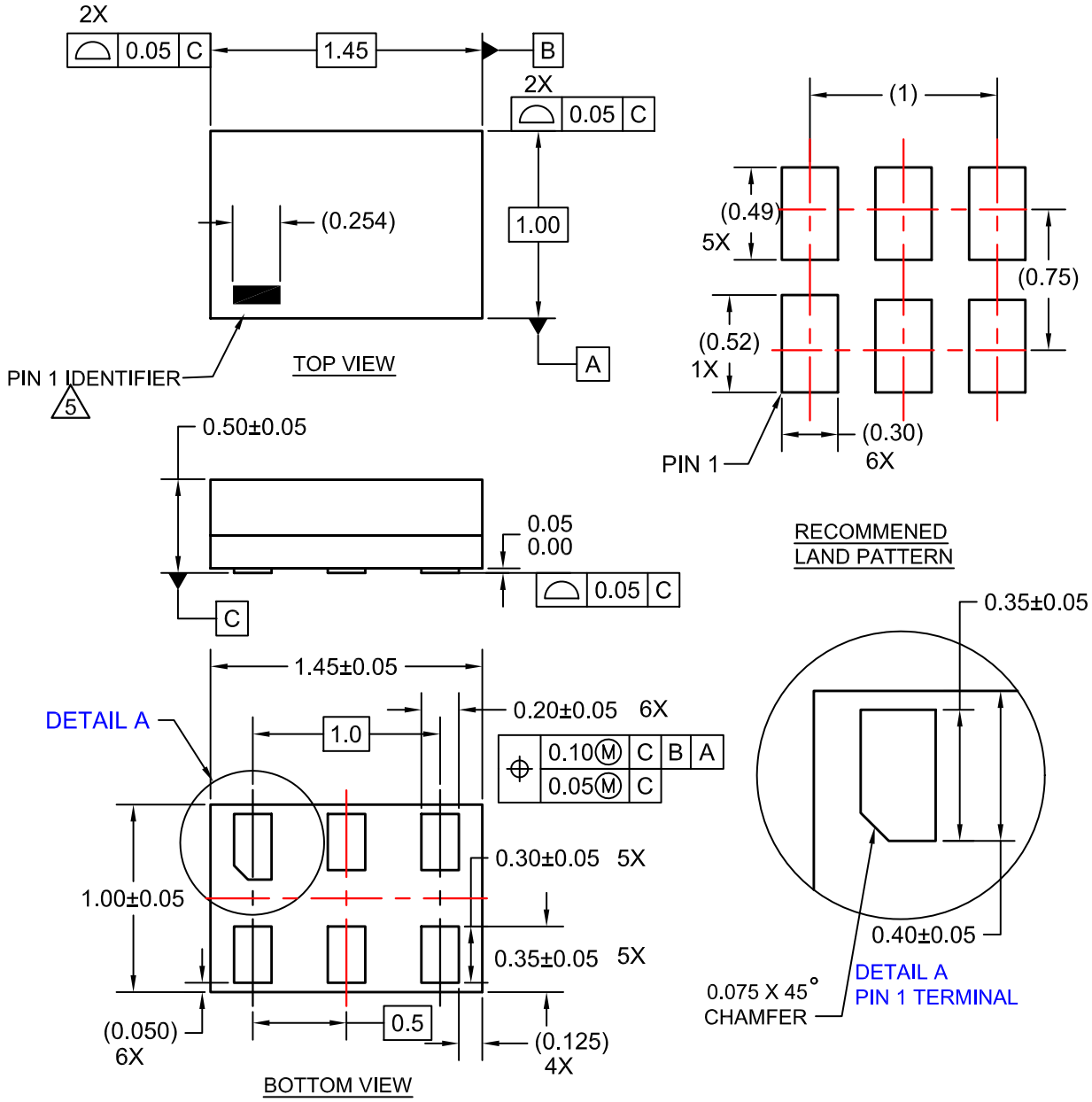

NOTES:

1. CONFORMS TO JEDEC STANDARD MO-252 VARIATION UAAD
2. DIMENSIONS ARE IN MILLIMETERS
3. DRAWING CONFORMS TO ASME Y14.5M-2009
4. PIN ONE IDENTIFIER IS 2X LENGTH OF ANY OTHER LINE IN THE MARK CODE LAYOUT.

DOCUMENT NUMBER:	**98AON13590G**	Electronic versions are uncontrolled except when accessed directly from the Document Repository. Printed versions are uncontrolled except when stamped "CONTROLLED COPY" in red.
DESCRIPTION:	**SIP6 1.45X1.0**	**PAGE 1 OF 1**

onsemi and onsemi are trademarks of Semiconductor Components Industries, LLC dba **onsemi** or its subsidiaries in the United States and/or other countries. **onsemi** reserves the right to make changes without further notice to any products herein. **onsemi** makes no warranty, representation or guarantee regarding the suitability of its products for any particular purpose, nor does **onsemi** assume any liability arising out of the application or use of any product or circuit, and specifically disclaims any and all liability, including without limitation special, consequential or incidental damages. **onsemi** does not convey any license under its patent rights nor the rights of others.

Downloaded from Arrow.com.

SC−88A (SC−70 5 Lead), 1.25x2
CASE 419AC−01
ISSUE A

DATE 29 JUN 2010

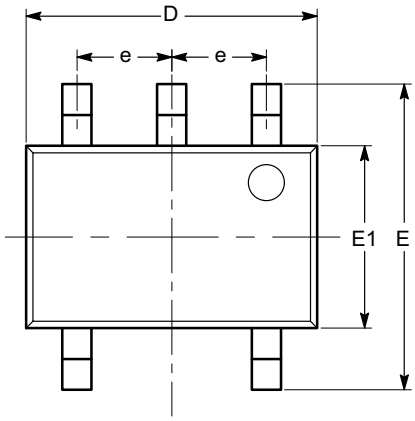

TOP VIEW

SYMBOL	MIN	NOM	MAX
A	0.80		1.10
A1	0.00		0.10
A2	0.80		1.00
b	0.15		0.30
c	0.10		0.18
D	1.80	2.00	2.20
E	1.80	2.10	2.40
E1	1.15	1.25	1.35
e		0.65 BSC	
L	0.26	0.36	0.46
L1		0.42 REF	
L2		0.15 BSC	
θ	0°		8°
θ1	4°		10°

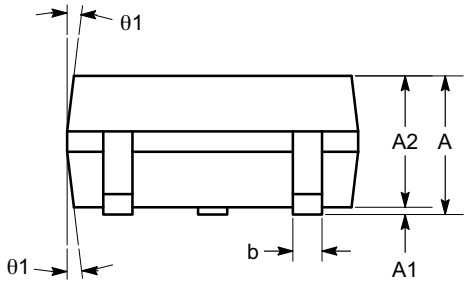

SIDE VIEW

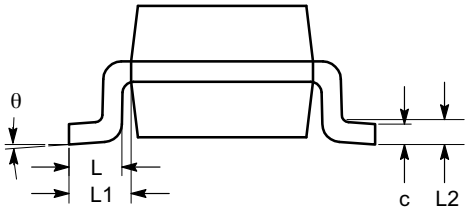

END VIEW

Notes:
(1) All dimensions are in millimeters. Angles in degrees.
(2) Complies with JEDEC MO-203.

DOCUMENT NUMBER:	98AON34260E	Electronic versions are uncontrolled except when accessed directly from the Document Repository. Printed versions are uncontrolled except when stamped "CONTROLLED COPY" in red.
DESCRIPTION:	SC−88A (SC−70 5 LEAD), 1.25X2	PAGE 1 OF 1

onsemi and onsemi are trademarks of Semiconductor Components Industries, LLC dba **onsemi** or its subsidiaries in the United States and/or other countries. **onsemi** reserves the right to make changes without further notice to any products herein. **onsemi** makes no warranty, representation or guarantee regarding the suitability of its products for any particular purpose, nor does **onsemi** assume any liability arising out of the application or use of any product or circuit, and specifically disclaims any and all liability, including without limitation special, consequential or incidental damages. **onsemi** does not convey any license under its patent rights nor the rights of others.

© Semiconductor Components Industries, LLC, 2008

Downloaded from Arrow.com.

UDFN6 1.0X1.0, 0.35P
CASE 517DP
ISSUE O

DATE 31 AUG 2016

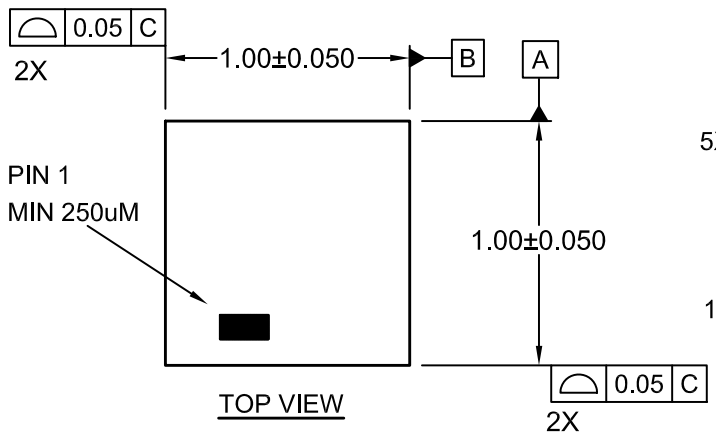

TOP VIEW

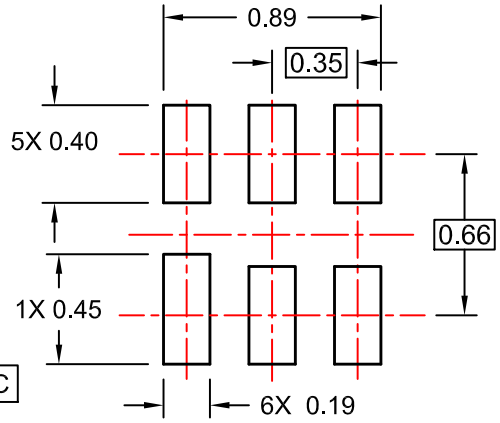

RECOMMENDED LAND PATTERN
FOR SPACE CONSTRAINED PCB

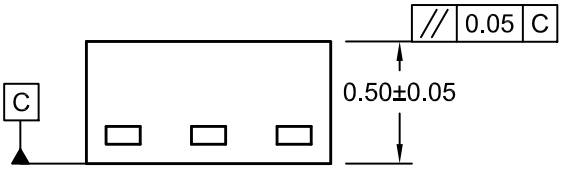

SIDE VIEW

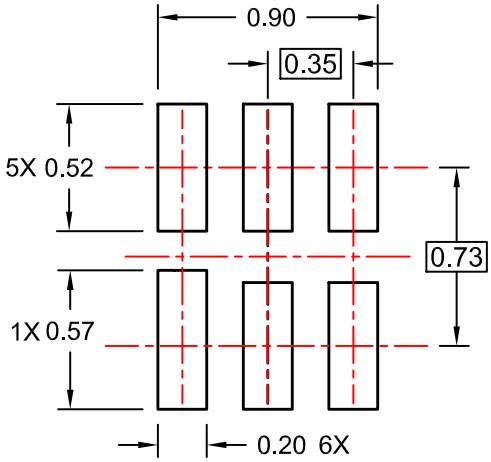

ALTERNATIVE LAND PATTERN
FOR UNIVERSAL APPLICATION

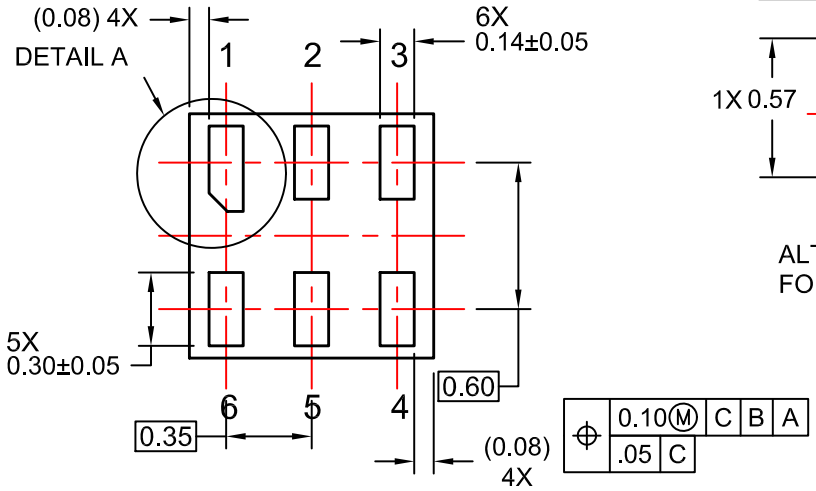

BOTTOM VIEW

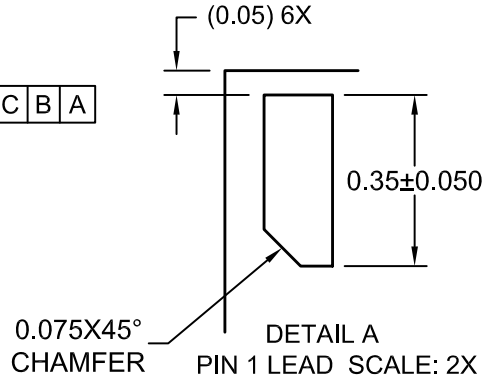

DETAIL A
PIN 1 LEAD SCALE: 2X

NOTES:

A. COMPLIES TO JEDEC MO-252 STANDARD
B. DIMENSIONS ARE IN MILLIMETERS.
C. DIMENSIONS AND TOLERANCES PER ASME Y14.5M, 2009

DOCUMENT NUMBER:	**98AON13593G**	Electronic versions are uncontrolled except when accessed directly from the Document Repository. Printed versions are uncontrolled except when stamped "CONTROLLED COPY" in red.
DESCRIPTION:	**UDFN6 1.0X1.0, 0.35P**	**PAGE 1 OF 1**

onsemi and onsemi are trademarks of Semiconductor Components Industries, LLC dba **onsemi** or its subsidiaries in the United States and/or other countries. **onsemi** reserves the right to make changes without further notice to any products herein. **onsemi** makes no warranty, representation or guarantee regarding the suitability of its products for any particular purpose, nor does **onsemi** assume any liability arising out of the application or use of any product or circuit, and specifically disclaims any and all liability, including without limitation special, consequential or incidental damages. **onsemi** does not convey any license under its patent rights nor the rights of others.

Downloaded from Arrow.com.

onsemi, onsemi, and other names, marks, and brands are registered and/or common law trademarks of Semiconductor Components Industries, LLC dba "**onsemi**" or its affiliates and/or subsidiaries in the United States and/or other countries. **onsemi** owns the rights to a number of patents, trademarks, copyrights, trade secrets, and other intellectual property. A listing of **onsemi**'s product/patent coverage may be accessed at www.onsemi.com/site/pdf/Patent−Marking.pdf. **onsemi** reserves the right to make changes at any time to any products or information herein, without notice. The information herein is provided "as−is" and **onsemi** makes no warranty, representation or guarantee regarding the accuracy of the information, product features, availability, functionality, or suitability of its products for any particular purpose, nor does **onsemi** assume any liability arising out of the application or use of any product or circuit, and specifically disclaims any and all liability, including without limitation special, consequential or incidental damages. Buyer is responsible for its products and applications using **onsemi** products, including compliance with all laws, regulations and safety requirements or standards, regardless of any support or applications information provided by **onsemi**. "Typical" parameters which may be provided in **onsemi** data sheets and/or specifications can and do vary in different applications and actual performance may vary over time. All operating parameters, including "Typicals" must be validated for each customer application by customer's technical experts. **onsemi** does not convey any license under any of its intellectual property rights nor the rights of others. **onsemi** products are not designed, intended, or authorized for use as a critical component in life support systems or any FDA Class 3 medical devices or medical devices with a same or similar classification in a foreign jurisdiction or any devices intended for implantation in the human body. Should Buyer purchase or use **onsemi** products for any such unintended or unauthorized application, Buyer shall indemnify and hold **onsemi** and its officers, employees, subsidiaries, affiliates, and distributors harmless against all claims, costs, damages, and expenses, and reasonable attorney fees arising out of, directly or indirectly, any claim of personal injury or death associated with such unintended or unauthorized use, even if such claim alleges that **onsemi** was negligent regarding the design or manufacture of the part. **onsemi** is an Equal Opportunity/Affirmative Action Employer. This literature is subject to all applicable copyright laws and is not for resale in any manner.

ADDITIONAL INFORMATION

TECHNICAL PUBLICATIONS:
Technical Library: www.onsemi.com/design/resources/technical−documentation
onsemi Website: www.onsemi.com

ONLINE SUPPORT: www.onsemi.com/support
For additional information, please contact your local Sales Representative at www.onsemi.com/support/sales

Downloaded from Arrow.com.