Features

- Full Power at Wide Output Current Range (Constant Power)
- Adjustable Output Current (AOC) with Programmability
- Isolated 1-10V/10V PWM/3-Timer-Modes Dimmable
- Output Lumen Compensation
- End-of-Life Indicator
- Input Surge Protection: DM 6kV, CM 10kV
- All-Around Protection: OVP, SCP, OTP
- IP66/IP67 and UL Dry/Damp/Wet Location
- TYPE HL, for use in a Class I, Division 2 Hazardous (Classified) Location
- 5 Years Warranty

Description

The *ESM-075SxxxDx* series is a 75W, constant-current, programmable and IP66/IP67 rated LED driver that operates from 249-528Vac input with excellent power factor. It is created for many lighting applications including high bay, tunnel and roadway, etc. The high efficiency of these drivers and compact metal case enables them to run cooler, significantly improving reliability and extending product life. To ensure trouble-free operation, protection is provided against input surge, output over voltage, short circuit, and over temperature.

Models

Adjustable Output Current Range(mA)	Full-Power Current Range(mA)(1)	Default Output Current(mA)	Output Voltage Range(Vdc)	Max. Output Power(W)	Typical Efficiency(2)	Typical Power Factor		Model Number(3)(6)
						277Vac	480Vac	
70-1050	700-1050	700	36-107	75	91.0%	0.99	0.95	ESM-075S105Dx(4)
105-1500	1050-1500	1050	25-72	75	89.5%	0.99	0.95	ESM-075S150Dx(4)
140-2100	1400-2100	2100	18-54	75	89.0%	0.99	0.95	ESM-075S210Dx(5)

Notes: (1) Output current range with constant power at 75W.
(2) Measured at 100% load and 480Vac input (see below "General Specifications" for details).
(3) Certified input voltage range: 277-480Vac.
(4) SELV Output.
(5) Class 2 & SELV output.
(6) x = G are UL Recognized and ENEC, etc. models; x = T are UL Class P models.

Downloaded from Arrow.com.

I-V Operation Area

ESM-075S105Dx

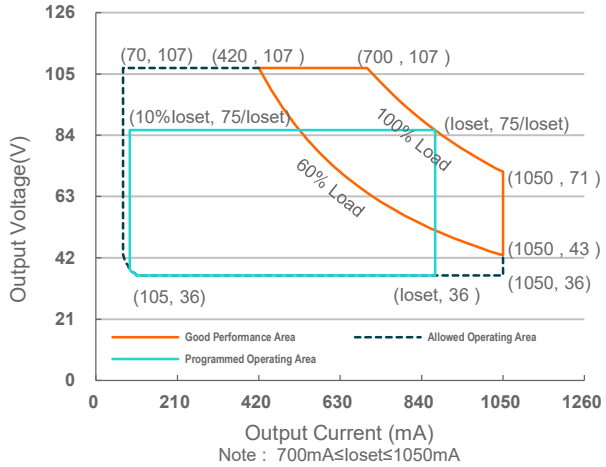

Note : 700mA≤Ioset≤1050mA

ESM-075S150Dx

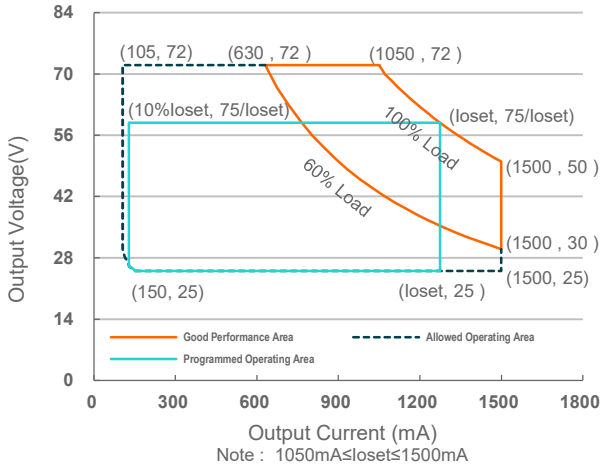

Note : 1050mA≤Ioset≤1500mA

ESM-075S210Dx

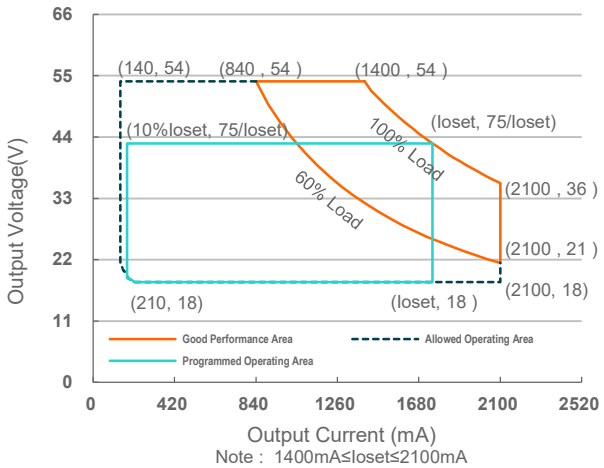

Note : 1400mA≤Ioset≤2100mA

Input Specifications

Parameter	Min.	Typ.	Max.	Notes
Input AC Voltage	249 Vac	-	528 Vac	
Input DC Voltage	352 Vdc	-	500 Vdc	
Input Frequency	47 Hz	-	63 Hz	
Leakage Current	-	-	0.75 MIU	UL 8750; 480Vac/ 60Hz
	-	-	0.70 mA	IEC 60598-1; 480Vac/ 60Hz
Input AC Current	-	-	0.34 A	Measured at 100% load and 277 Vac input.
	-	-	0.20 A	Measured at 100% load and 480 Vac input.
Inrush Current(I^2t)	-	-	0.89 A^2s	At 480Vac input, 25°C cold start, duration=252 μs, 10%Ipk-10%Ipk.

Downloaded from Arrow.com.

Input Specifications (Continued)

Parameter	Min.	Typ.	Max.	Notes
PF	0.9	-	-	At 277-480Vac, 50-60Hz, 60%-100% Load (45-75W)
THD	-	-	20%	

Output Specifications

Parameter	Min.	Typ.	Max.	Notes
Output Current Tolerance	-5%Ioset	-	5%Ioset	At 100% load condition
Output Current Setting(Ioset) Range ESM-075S105Dx ESM-075S150Dx ESM-075S210Dx	 70 mA 105 mA 140 mA	 - - -	 1050 mA 1500 mA 2100 mA	
Output Current Setting Range with Constant Power ESM-075S105Dx ESM-075S150Dx ESM-075S210Dx	 700 mA 1050 mA 1400 mA	 - - -	 1050 mA 1500 mA 2100 mA	
Total Output Current Ripple (pk-pk)	-	5%Iomax	10%Iomax	At 100% load condition. 20 MHz BW
Output Current Ripple at < 200 Hz (pk-pk)	-	2%Iomax	-	At 100% load condition. Only this component of ripple is associated with visible flicker.
Startup Overshoot Current	-	-	10%Iomax	At 100% load condition
No Load Output Voltage ESM-075S105Dx ESM-075S150Dx ESM-075S210Dx	 - - -	 - - -	 120 V 90 V 60 V	
Line Regulation	-	-	±1%	Measured at 100% load
Load Regulation	-	-	±5%	
Turn-on Delay Time	-	-	0.5 s	Measured at 277-480Vac input, 60%-100% Load
Temperature Coefficient of Ioset	-	0.06%/°C	-	Case temperature = 0°C ~Tc max

General Specifications

Parameter	Min.	Typ.	Max.	Notes
Efficiency at 277 Vac input: ESM-075S105Dx Io= 700 mA Io=1050 mA ESM-075S150Dx Io=1050 mA Io=1500 mA ESM-075S210Dx Io=1400 mA Io=2100 mA	 88.0% 88.5% 87.0% 87.0% 86.5% 86.5%	 90.0% 90.5% 89.0% 89.0% 88.5% 88.5%	 - - - - - -	Measured at 100% load and steady-state temperature in 25°C ambient; (Efficiency will be about 2.0% lower if measured immediately after startup.)

Downloaded from Arrow.com.

General Specifications (Continued)

Parameter	Min.	Typ.	Max.	Notes
Efficiency at 400 Vac input: ESM-075S105Dx Io= 700 mA Io=1050 mA ESM-075S150Dx Io=1050 mA Io=1500 mA ESM-075S210Dx Io=1400 mA Io=2100 mA	 88.5% 89.0% 87.0% 87.5% 87.0% 87.0%	 90.5% 91.0% 89.0% 89.5% 89.0% 89.0%	 - - - - - -	Measured at 100% load and steady-state temperature in 25°C ambient; (Efficiency will be about 2.0% lower if measured immediately after startup.)
Efficiency at 480 Vac input: ESM-075S105Dx Io= 700 mA Io=1050 mA ESM-075S150Dx Io=1050 mA Io=1500 mA ESM-075S210Dx Io=1400 mA Io=2100 mA	 88.5% 89.0% 87.0% 87.5% 87.0% 87.0%	 90.5% 91.0% 89.0% 89.5% 88.5% 89.0%	 - - - - - -	Measured at 100% load and steady-state temperature in 25°C ambient; (Efficiency will be about 2.0% lower if measured immediately after startup.)
MTBF	-	302,000 Hours	-	Measured at 480Vac input, 80%Load and 25°C ambient temperature (MIL-HDBK-217F)
Lifetime	-	102,000 Hours	-	Measured at 480Vac input, 80%Load and 70°C case temperature; See lifetime vs. Tc curve for the details
Operating Case Temperature for Safety Tc_s	-40°C	-	+90°C	
Operating Case Temperature for Warranty Tc_w	-40°C	-	+80°C	Case temperature for 5 years warranty Humidity: 10%RH to 95%RH
Storage Temperature	-40°C	-	+85°C	Humidity: 5%RH to 95%RH
Dimensions: Inches (L × W × H) Millimeters (L × W × H)	4.92 × 2.66 × 1.52 125 × 67.5 × 38.5			With mounting ear 5.59 × 2.66 × 1.52 142 × 67.5 × 38.5
Net Weight	-	710 g	-	

Dimming Specifications

Parameter		Min.	Typ.	Max.	Notes
Absolute Maximum Voltage on the Vdim (+) Pin		-20 V	-	20 V	
Source Current on Vdim (+)Pin		200 uA	300 uA	450 uA	Vdim(+) = 0 V
Dimming Output Range	ESM-075S105DG ESM-075S150DG ESM-075S210DG	10%Ioset	-	Ioset	700 mA ⩽ Ioset ⩽ 1050 mA 1050 mA ⩽ Ioset ⩽ 1500 mA 1400 mA ⩽ Ioset ⩽ 2100 mA
	ESM-075S105DG ESM-075S150DG ESM-075S210DG	70 mA 105 mA 140 mA	-	Ioset	70 mA ⩽ Ioset ＜ 700 mA 105 mA ⩽ Ioset ＜ 1050 mA 140 mA ⩽ Ioset ＜ 1400 mA
Recommended Dimming Range for 1-10V		1 V	-	9 V	Default 1-10V dimming mode with positive logic.

Downloaded from Arrow.com.

Dimming Specifications (Continued)

Parameter	Min.	Typ.	Max.	Notes
PWM_in High Level	-	10V	-	
PWM_in Low Level	-	0V	-	
PWM_in Frequency Range	200 Hz	-	2 KHz	
PWM_in Duty Cycle	0%	-	100%	

Safety &EMC Compliance

Safety Category	Standard
UL/CUL	UL 8750,CAN/CSA-C22.2 No. 250.13
ENEC & CE	EN 61347-1, EN 61347-2-13
CB	IEC 61347-1, IEC 61347-2-13
Performance	**Standard**
ENEC	EN IEC 62384
EMI Standards	**Notes**
EN IEC 55015(1)	Conducted emission Test &Radiated emission Test
EN IEC 61000-3-2	Harmonic current emissions
EN 61000-3-3	Voltage fluctuations & flicker
FCC Part 15(1)	ANSI C63.4 Class B
	This device complies with Part 15 of the FCC Rules. Operation is subject to the following two conditions: [1] this device may not cause harmful interference, and [2] this device must accept any interference received, including interference that may cause undesired Operation.
EMS Standards	**Notes**
EN 61000-4-2	Electrostatic Discharge (ESD): 8 kV air discharge, 4 kV contact discharge
EN 61000-4-3	Radio-Frequency Electromagnetic Field Susceptibility Test-RS
EN 61000-4-4	Electrical Fast Transient / Burst-EFT
EN 61000-4-5	Surge Immunity Test: AC Power Line: Differential Mode 6 kV, Common Mode 10 kV
EN 61000-4-6	Conducted Radio Frequency Disturbances Test-CS
EN 61000-4-8	Power Frequency Magnetic Field Test
EN 61000-4-11	Voltage Dips
EN 61547	Electromagnetic Immunity Requirements Applies To Lighting Equipment

Note: (1) This LED driver meets the EMI specifications above, but EMI performance of a luminaire that contains it depends also on the other devices connected to the driver and on the fixture itself.

Downloaded from Arrow.com.

Lifetime vs. Case Temperature

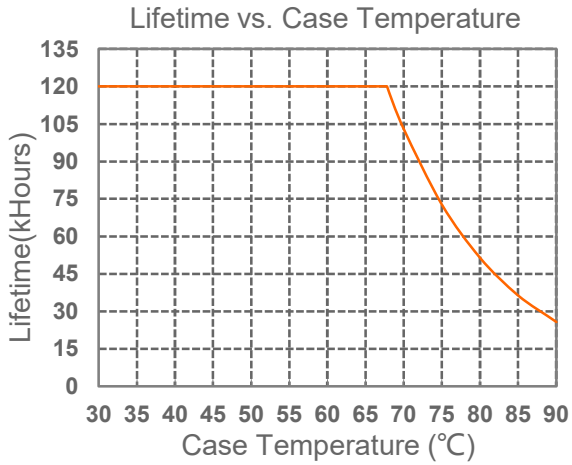

Inrush Current Waveform

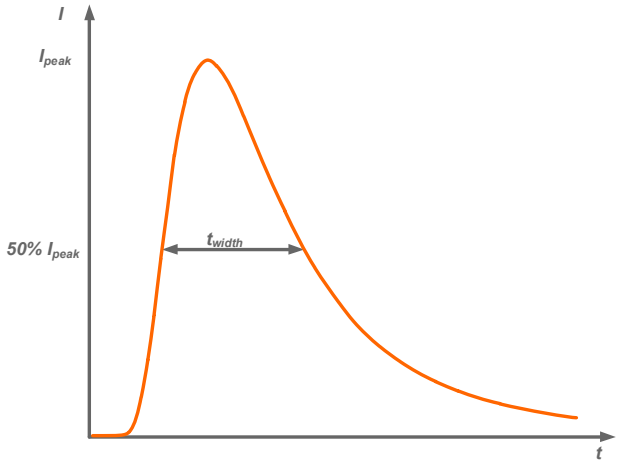

Input AC Voltage	I_{peak}	t_{width} (@ 50% Ipeak)
480Vac	68.5A	148μs

Efficiency vs. Load

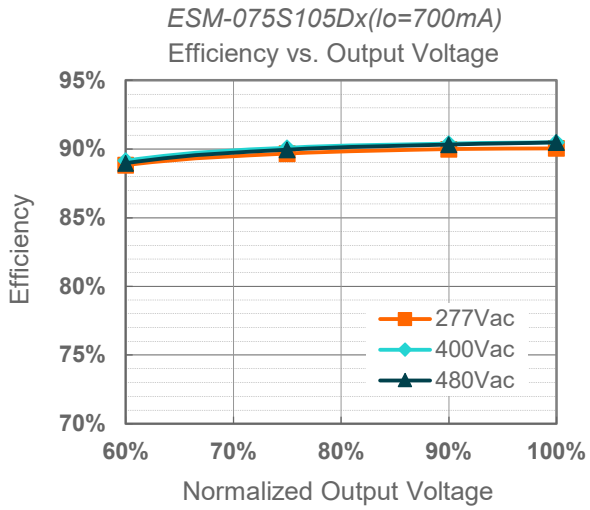

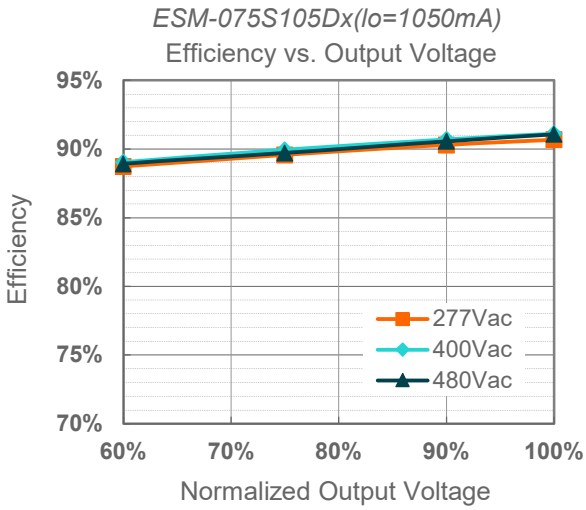

Downloaded from Arrow.com.

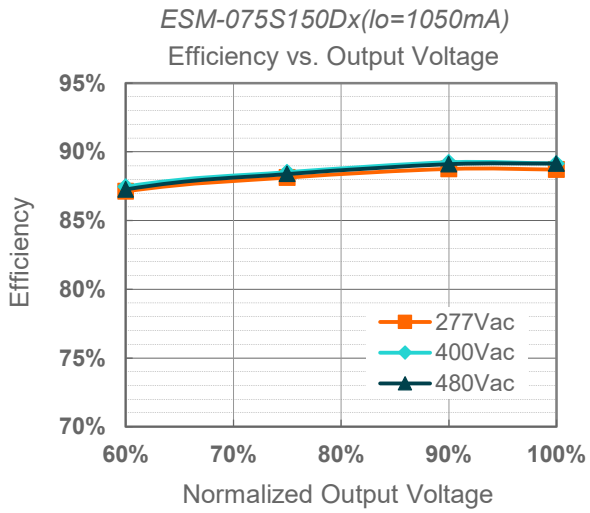

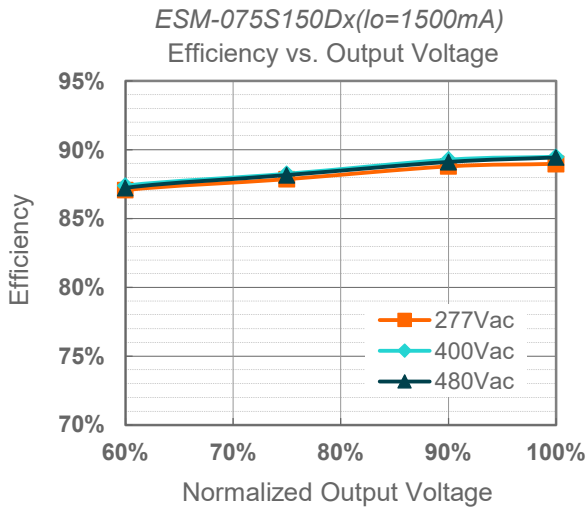

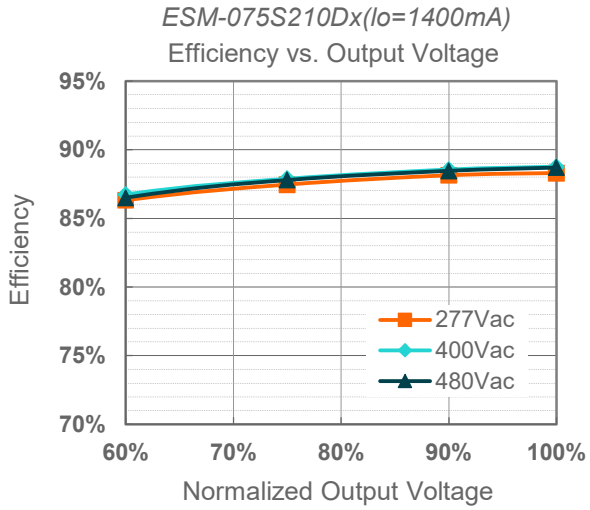

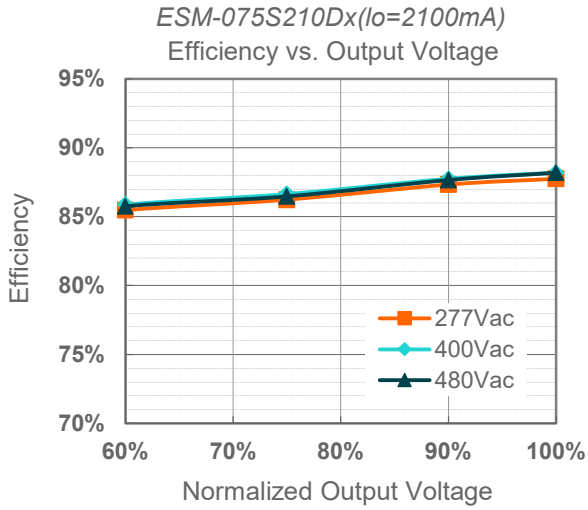

Power Factor

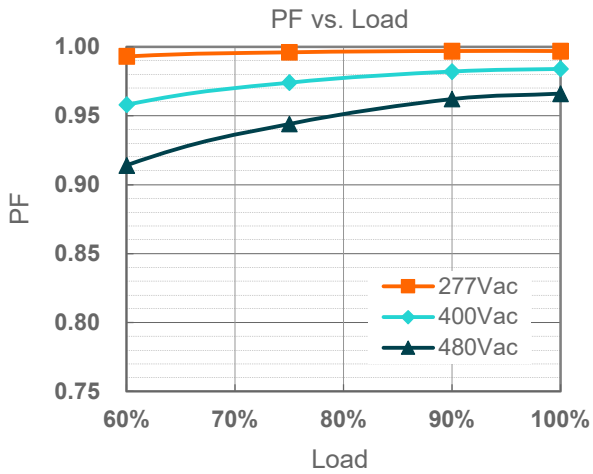

Downloaded from Arrow.com.

Total Harmonic Distortion

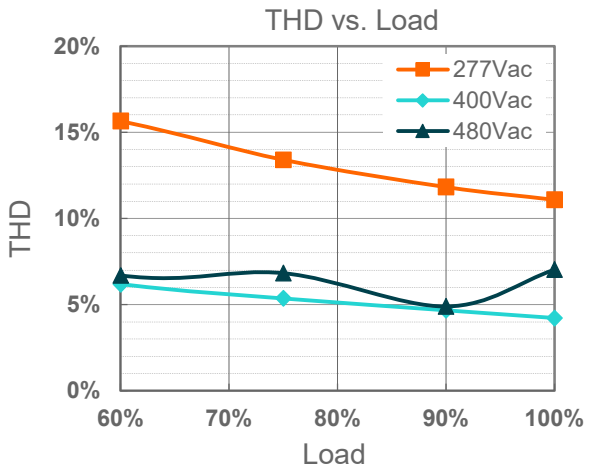

Protection Functions

Parameter	Notes
Over Temperature Protection	Decreases output current, returning to normal after over temperature is removed.
Short Circuit Protection	Auto Recovery. No damage will occur when any output is short circuited. The output shall return to normal when the fault condition is removed.
Over Voltage Protection	Limits output voltage at no load and in case the normal voltage limit fails.

Dimming

1-10V Dimming

The recommended implementation of the dimming control is provided below.

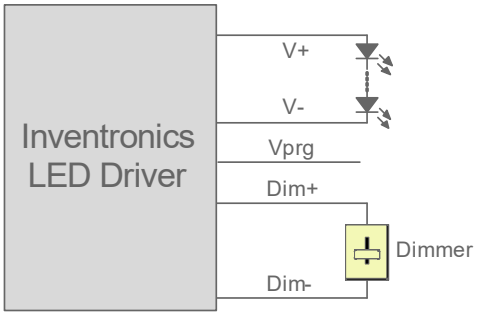

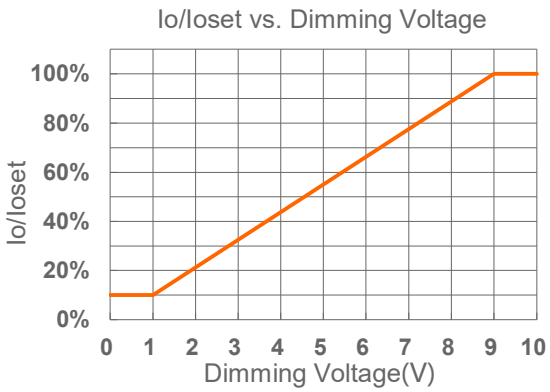

Implementation 1: Positive logic

Specifications are subject to changes without notice. *All specifications are typical at 25℃ unless otherwise stated.*

www.inventronics-co.com Tel: 86-571-56565800 Fax: 86-571-86601139 Sales@inventronicsglobal.com

Downloaded from Arrow.com.

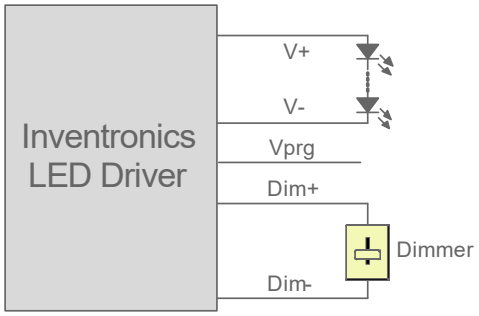

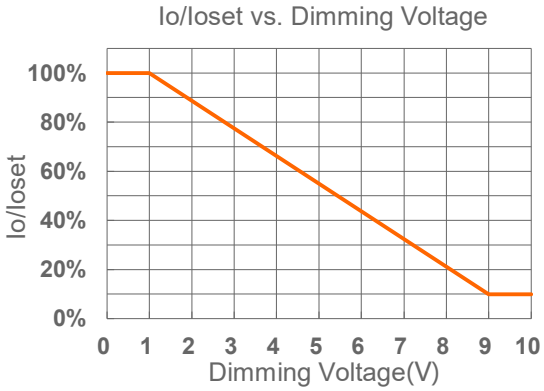

Implementation 2: Negative logic

Notes:

1. Do NOT connect Dim− to the output V− or V+, otherwise the driver will not work properly.
2. The dimmer can also be replaced by an active 1-10V voltage source signal or passive components like zener.
3. When 1-10V negative logic dimming mode and Dim+ is open, the driver will output minimum current.

10V PWM Dimming

The recommended implementation of the dimming control is provided below.

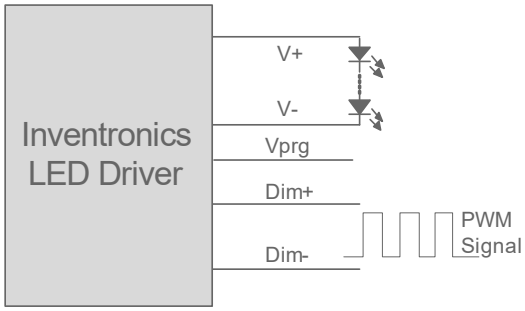

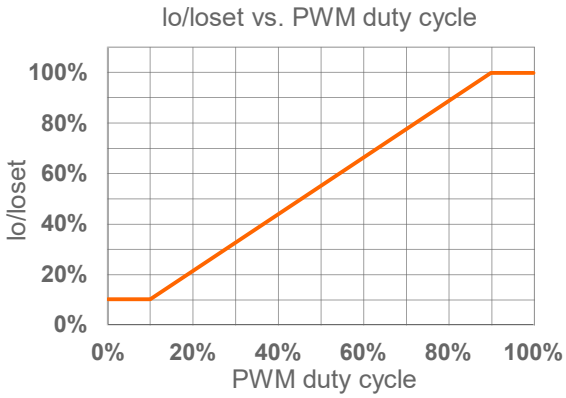

Implementation 3: Positive logic

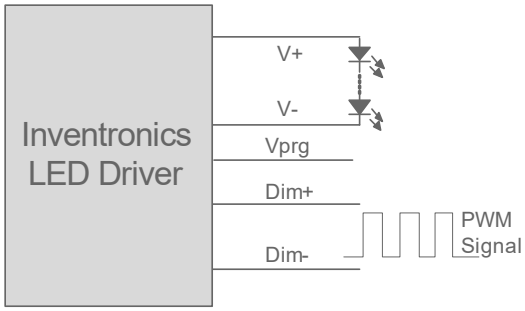

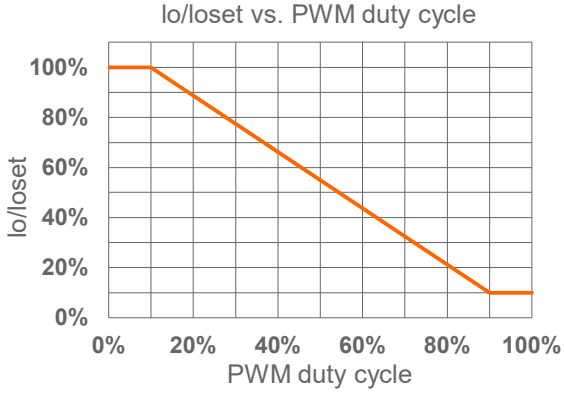

Implementation 4: Negative logic

Downloaded from Arrow.com.

Notes:
1. Do NOT connect Dim− to the output V− or V+, otherwise the driver will not work properly.
2. When 10V PWM negative logic dimming mode and Dim+ is open, the driver will output minimum current.

Time Dimming

Time dimming control includes 3 kinds of modes, they are Self Adapting-Midnight, Self Adapting-Percentage and Traditional Timer.

- **Self Adapting-Midnight**: Automatically adjusts the dimming curve based on the on-time of past two days (if difference <15 minutes), assuming that the center point of the dimming curve is midnight local time.
- **Self Adapting-Percentage**: Automatically adjusts the on-time of each step by a constant percentage = (actual on-time for the past 2 days if difference <15 min) / (programmed on-time from the dimming curve).
- **Traditional Timer**: Follows the programmed timing curve after power on with no changes.

Output Lumen Compensation

Output Lumen Compensation (OLC) may be used to maintain constant light output over the life of the LEDs by driving them at a reduced current when new, then gradually increasing the drive current over time to counteract LED lumen degradation.

End Of Life

End-of-Life (EOL) is providing a visual notification to a user that the LED module has reached the end of manufacturer-specified life and that the replacement is recommended. Once active, an indication is given at each power-up of the driver, which the driver indicates this through a lower light output during the first 1 minute before normal operation is continued.

Programming Connection Diagram

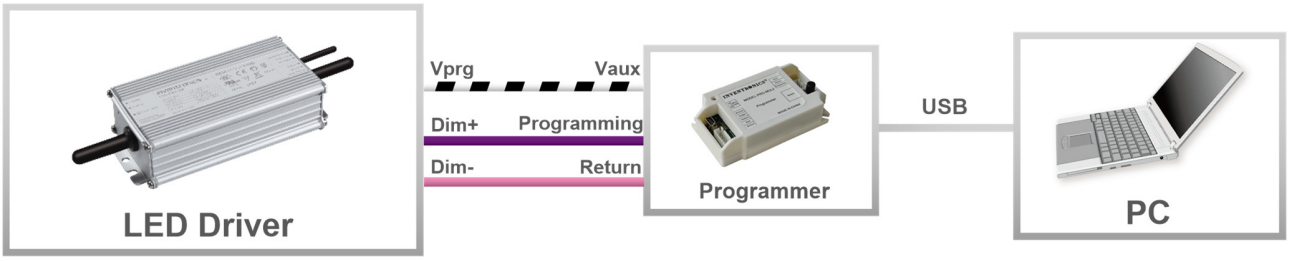

Note: The driver does not need to be powered on during the programming process.

- **Please refer to PRG-MUL2 (Programmer) datasheet for details.**

Downloaded from Arrow.com.

Mechanical Outline

ESM-075SxxxDG

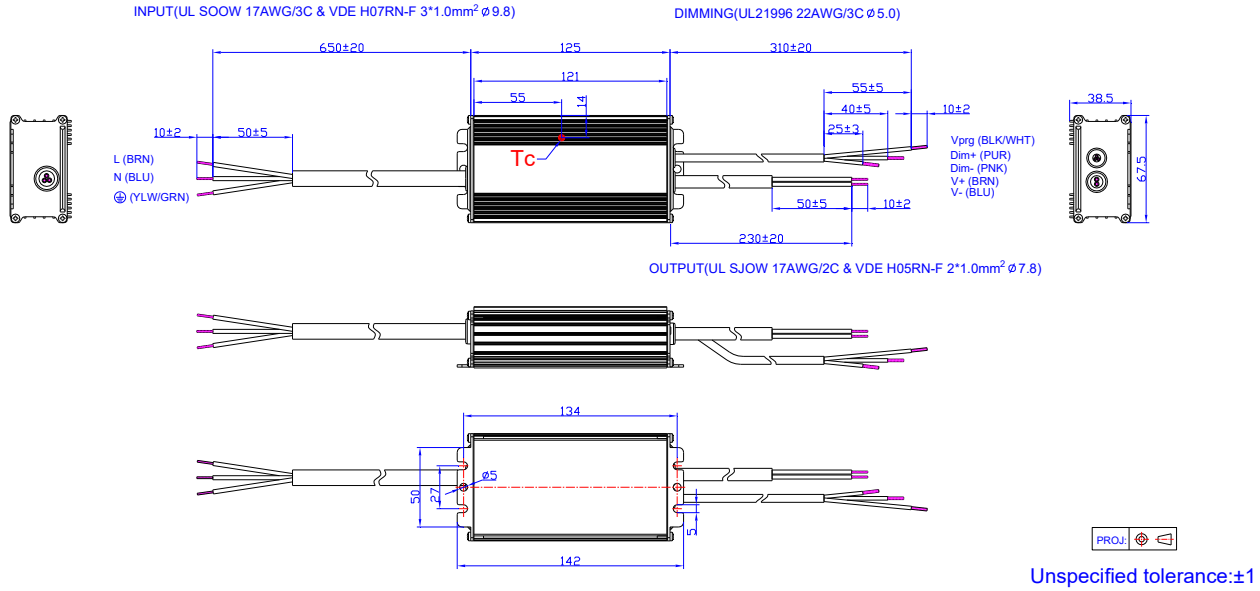

Unspecified tolerance:±1

ESM-075SxxxDT

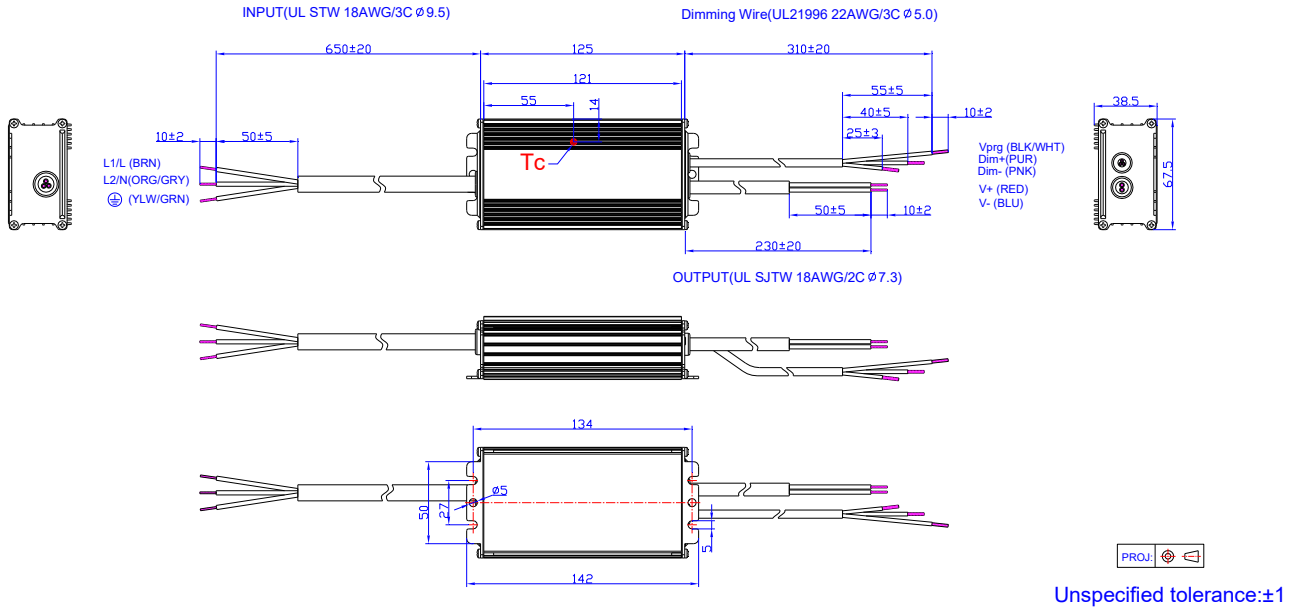

Unspecified tolerance:±1

RoHS Compliance

Our products comply with reference to RoHS Directive (EU) 2015/863 amending 2011/65/EU, calling for the elimination of lead and other hazardous substances from electronic products.

Downloaded from Arrow.com.

Revision History

Change Date	Rev.	Description of Change		
		Item	From	To
2021-08-26	A	Datasheets Release	/	/
2022-01-22	B	UKCA logo	/	Added
		Safety &EMC Compliance	UKCA	Added
		Programming Connection Diagram	ESM-075SxxxDT	Updated
		Mechanical Outline	ESM-075SxxxDT	Updated
2023-06-20	C	Product Photograph	/	Updated
		Safety &EMC Compliance	/	Updated
		Dimming	/	Updated
		Programming Connection Diagram	/	Updated
		Mechanical Outline	/	Updated
2026-03-11	D	Format	/	Updated
		Product Photograph	/	Updated
		UKCA logo	/	Deleted
		Safety &EMC Compliance	/	Updated
		Inrush Current Waveform	/	Updated

www.inventronics-co.com Tel: 86-571-56565800 Fax: 86-571-86601139 Sales@inventronicsglobal.com

Downloaded from Arrow.com.