Connector Location A

Connector Location B

E500416

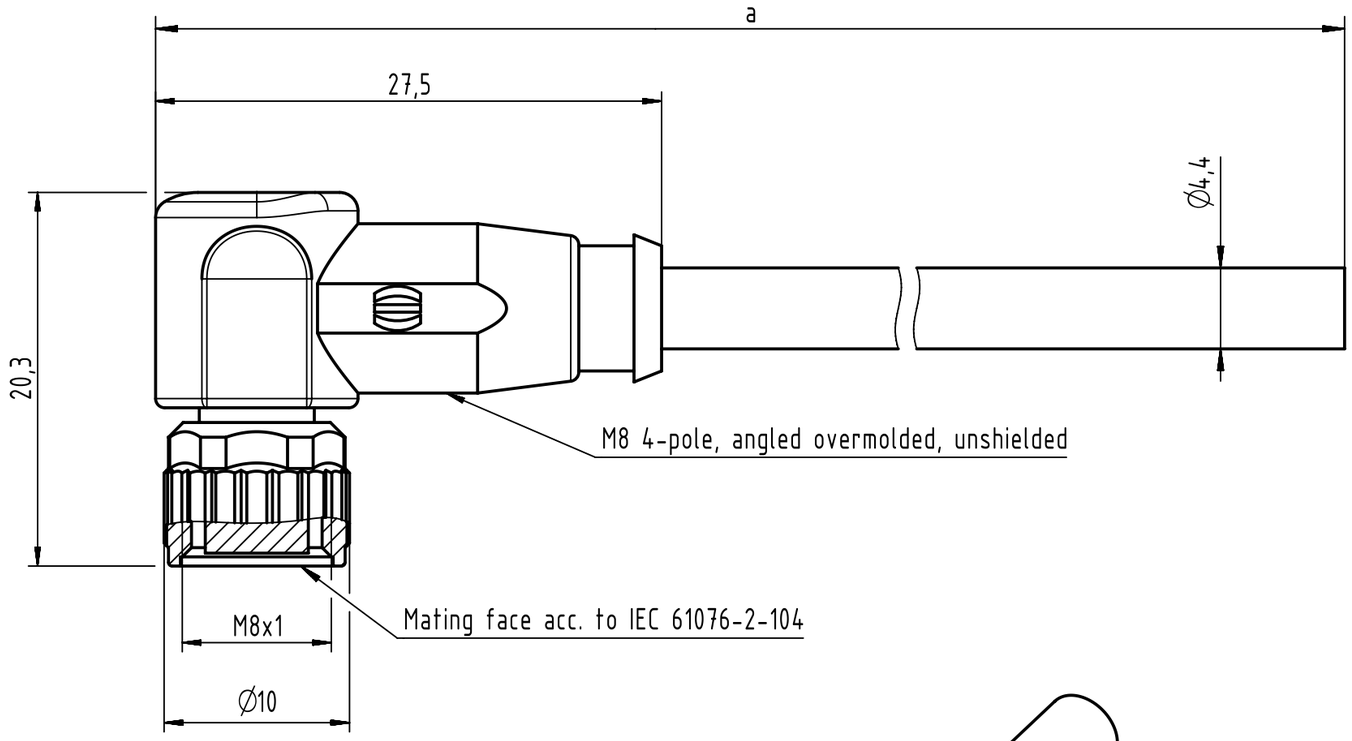

X
female

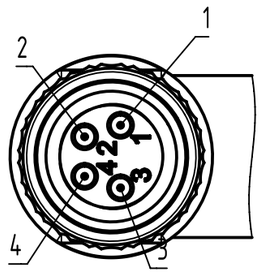

Loading-Plan

1	brown
2	white
3	blue
4	black

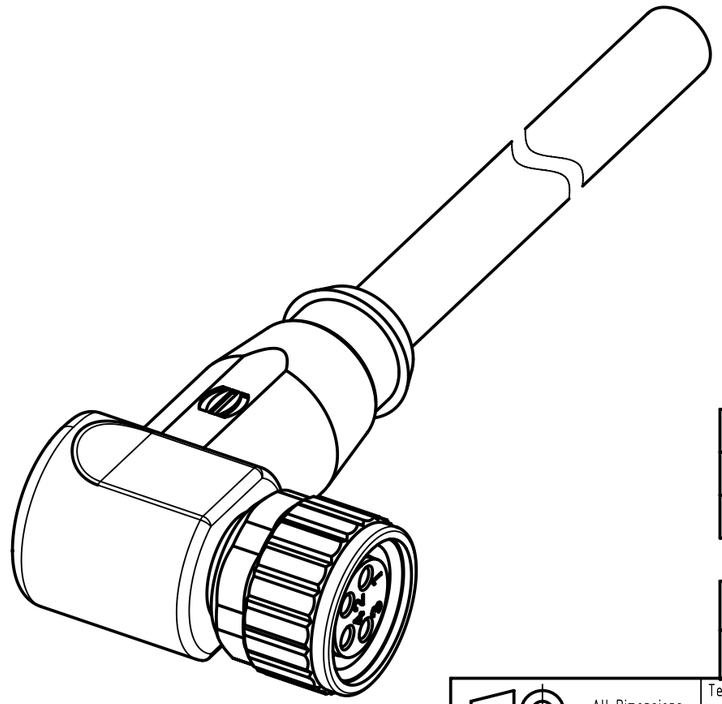

- Protection level: IP67
- Temperature range: -25°C ... +80°C

4.0 to 40	±1%
0.1 to 3.9	+0.04
a [m]	Tolerance

length in "1m" step	40	XXX=400
	39	XXX=390
	. . .	. . .
	12	XXX=120
	11	XXX=110
length in "0.1m" step	10	XXX=100
	9.9	XXX=099
	9.8	XXX=098
	. . .	. . .
	0.4	XXX=004
	0.3	XXX=003
	0.2	XXX=002
	0.1	XXX=001
Step	a [m]	XXX

PUR black, 4x0.25mm²	21348300489XXX
Type of cable	Part no.

All Dimensions in mm | Tech. Character. | Free size tol. | According to production drawing

All rights reserved

Department HCS - RO

HARTING Customised Solutions

D-32339 Espelkamp

Created by	Inspected by	Standardisation	Date	State
STOCHECIC Stocheci	COSTEA Costea	MUNTEANV Muntean	2019-01-11	Final Release

Title: M8 Cable Assembly 4-poles an/- f/-

Doc-Key / ECM-Nr.: 100809803/UGD/009/A 500000145294

Type: TB | Number: 21348300489XXX | Rev.: A | Page: 1/1

A3

Downloaded from Arrow.com.