DATE	REV	ECN	APP'D. BY
2-25-16	A7	10567	TRM
10-31-16	A8	10807	TRM

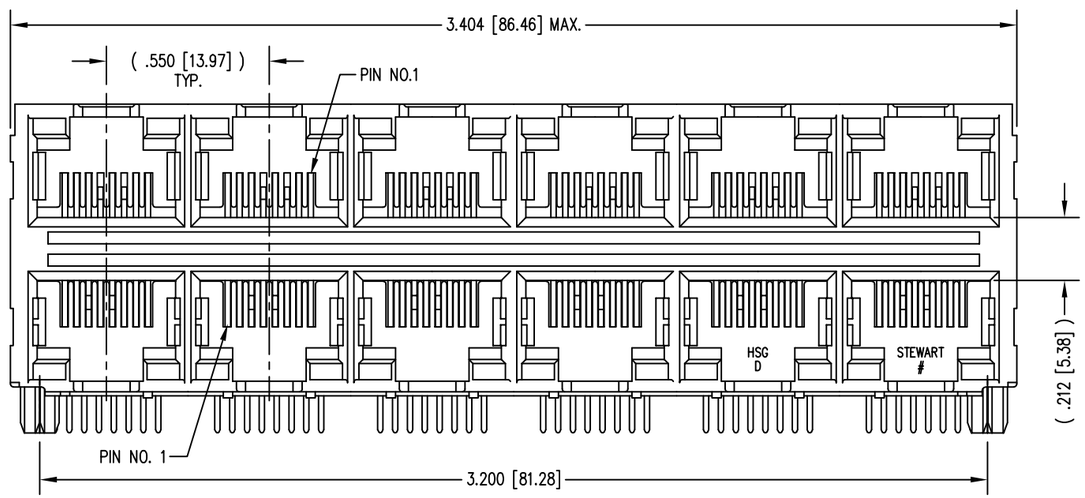

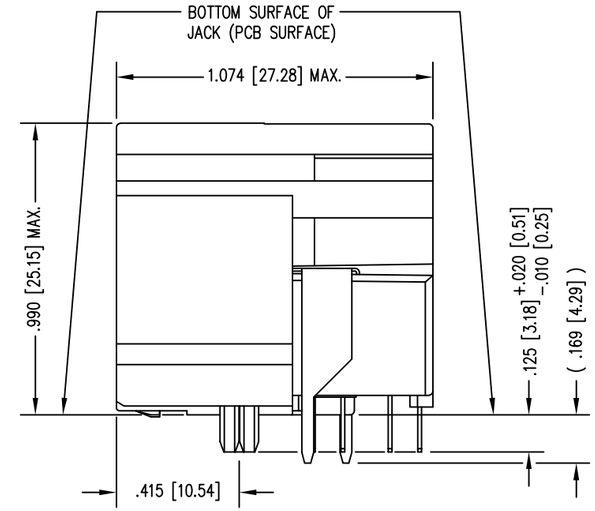

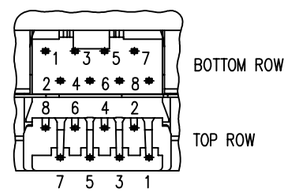

PIN CALLOUT
TYP. ALL PORTS

NOTES:

1. CONNECTOR MATERIALS:
   HOUSING: THERMOPLASTIC UL94 V-0
   CONTACTS/SHIELD: COPPER ALLOY
   SHIELD PLATING: NICKEL OR TIN
   CONTACT PLATING: SELECTIVE GOLD IN CONTACT AREA
   SEE CHART FOR PART NUMBER
2. FOR PRODUCT SPECIFICATIONS SEE PR022-01.
3. DIMENSIONS AND TOLERANCES COMPLY WITH TIA-1096 STANDARD.
4. DESIGNED FOR CATEGORY CAT 5/5e APPLICATIONS.

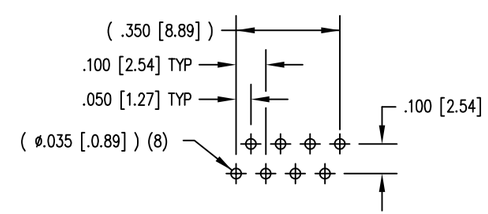

DETAIL "A"
TYPICAL HOLE LAYOUT

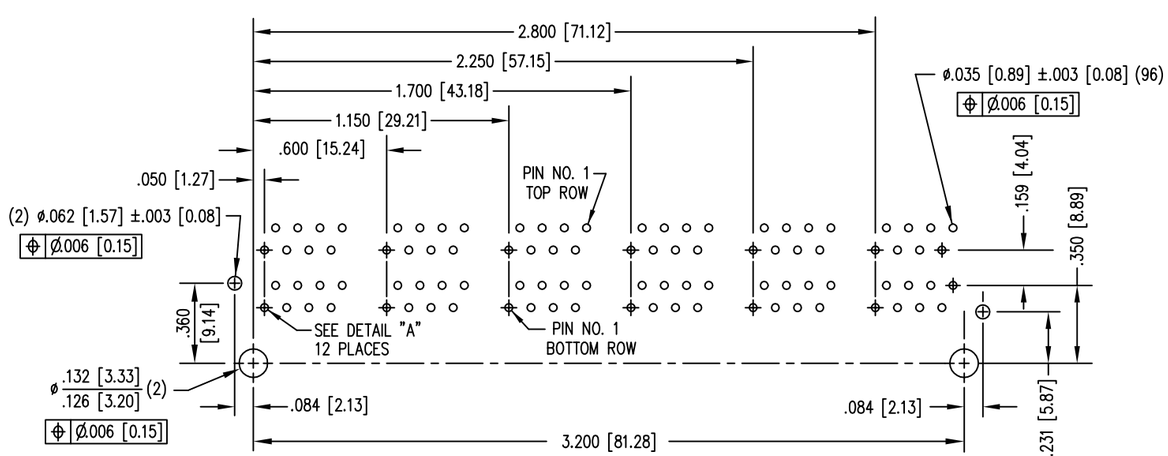

P.C.B. RECOMMENDED HOLE LAYOUT
SEEN FROM COMPONENT SIDE

ALL CENTERLINE DIMENSIONS ARE BASIC.

30 MICRO-INCHES [0.76um]	SS-73100-070
CONTACT PLATING IN MATING AREA	PART NUMBER

THIRD ANGLE PROJECTION

DO NOT SCALE DRAWING
DRAWING IS SUBJECT TO CHANGE WITHOUT NOTICE
DIMENSIONS: INCHES [METRIC]
UNLESS OTHERWISE SPECIFIED TOLERANCES ARE ±.005 [0.13] ANGLES ARE ± 1°
SHEET NO. 1 OF 1

stewart CONNECTOR a bel group
11118 Susquehanna Trail South
Glen Rock, PA 17327-9199
(717) 235-7512
http://www.stewartconnector.com

TITLE: HIGH PERFORMANCE UNSHIELDED STACK JACK
50 MICRO INCHES GOLD, 12 PORTS (6 ON 6)

THIS DRAWING AND THE SUBJECT MATTER SHOWN THEREON ARE CONFIDENTIAL AND THE PROPRIETARY PROPERTY OF STEWART CONNECTOR AND SHALL NOT BE REPRODUCED, COPIED, OR USED IN ANY MANNER WITHOUT PRIOR WRITTEN CONSENT OF STEWART CONNECTOR. ONE OR MORE U.S. PATENTS MAY APPLY TO THIS PRODUCT. FOR DETAILS, PLEASE VISIT: HTTP://BELFUSE.COM/STEWART/STEWART_PATENTS/

DRN BY:	KRL	DATE	2/3/06
APPD BY:	TRM	DATE	5-11-06
DWG NO.	CT730073	REV.	A8

AutoCAD

Downloaded from Arrow.com.