ROHS COMPLIANT

PRODUCT DATA DRAWING

REVISION HISTORY			
REV	DESCRIPTION	DATE	APPROVED
-	DCN 47184	02/18	STW

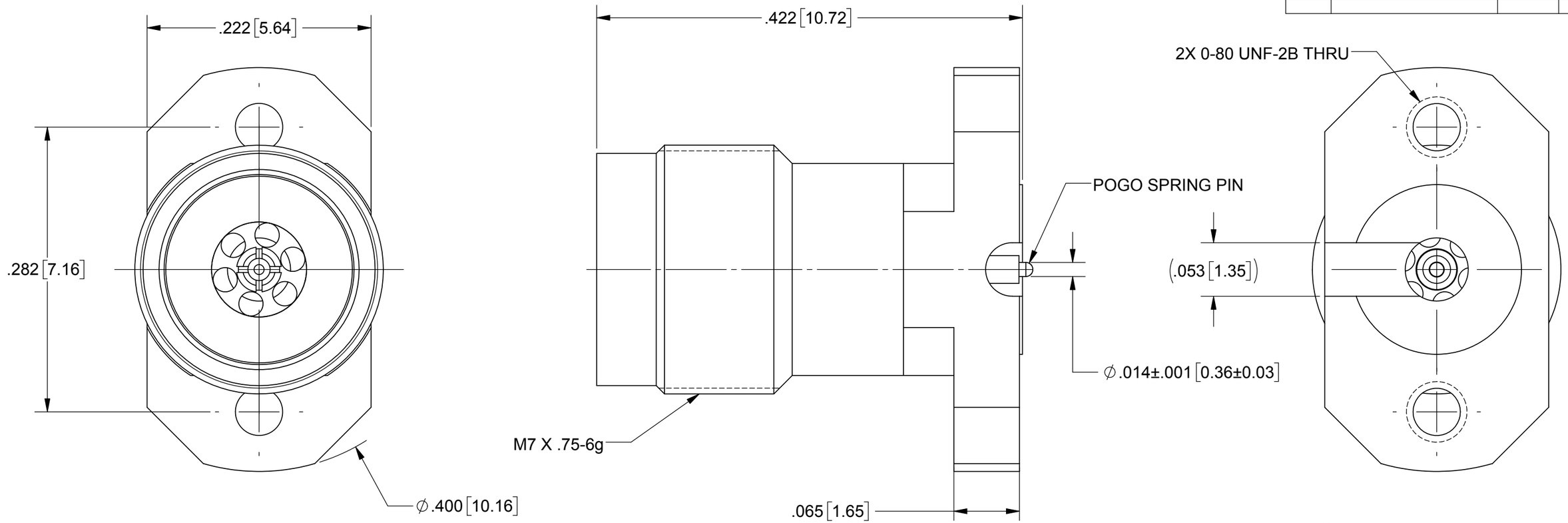

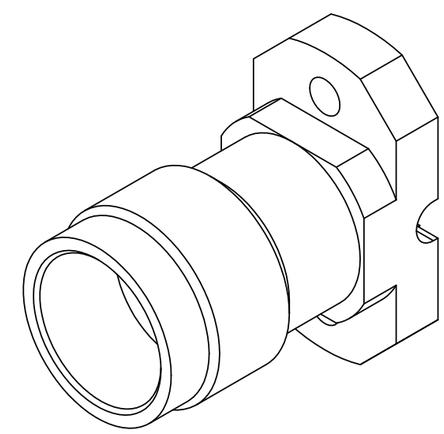

MATERIAL:

BODY & INSERT: STAINLESS STEEL PER AMS-5640, ALLOY UNS S30300, TYPE 1; OR ASTM A582 TYPE 303, COND. A

CONTACTS: BERYLLIUM COPPER PER ASTM B196, ALLOY No. UNS C17300, TD04

INSULATOR: ULTEM PER ASTM D5205

FINISH:

BODY & INSERT: PASSIVATED PER AMS-2700

CONTACTS: GOLD PER ASTM B488, TYPE II, CODE C, CLASS 1.27, OVER NICKEL PER AMS-QQ-N-290, CLASS 1, .00005" MIN.

PERFORMANCE:

IMPEDANCE: 50 OHMS
FREQ. RANGE: DC TO 50.0 GHz.

MATERIAL: SEE NOTES
FINISH: SEE NOTES
SURFACE AREA: N/A

PROPRIETARY

THE INFORMATION CONTAINED IN THIS DRAWING IS THE SOLE PROPERTY OF SV MICROWAVE, INC. ANY REPRODUCTION IN PART OR AS A WHOLE WITHOUT THE WRITTEN PERMISSION OF SV MICROWAVE, INC IS PROHIBITED.

DIMENSIONS ARE IN INCHES TOLERANCES:
FRACTIONAL: ±1/64 ANGULAR: X° ±1°0' X°X' ±15'
DECIMAL: .X ±.030 .XX ±.010 .XXX ±.005

INTERPRET DIMENSIONS AND TOLERANCES PER ASME Y14.5M - 1994

THIRD ANGLE PROJECTION

UNLESS OTHERWISE SPECIFIED
1) ALL DIMENSIONS ARE IN INCHES [MILLIMETERS]
2) ALL DIMENSIONS ARE AFTER PLATING.
3) BREAK CORNERS & EDGES .005 R. MAX.
4) CHAM. 1ST & LAST THREADS.
5) SURFACE ROUGHNESS 63₊MIL-STD-10.
6) DIA.'S ON COMMON CENTERS TO BE CONCENTRIC WITHIN .005 T.I.R.
7) REMOVE ALL BURRS

DRAWN:	TMW 02/07/18
CHECKED:	STW 02/07/18
APPROVED:	STW 02/07/18

Amphenol SV MICROWAVE
2400 Centrepark West Drive, Suite 100
West Palm Beach, FL 33409

TITLE: 2.4mm FEMALE 2 HOLE FLANGE MOUNT W/ SPRING PIN

SIZE	CAGE CODE	DWG. NO.
B	95077	SF1621-60048

SCALE: 10:1 SHEET 1 OF 1

Downloaded from Arrow.com.