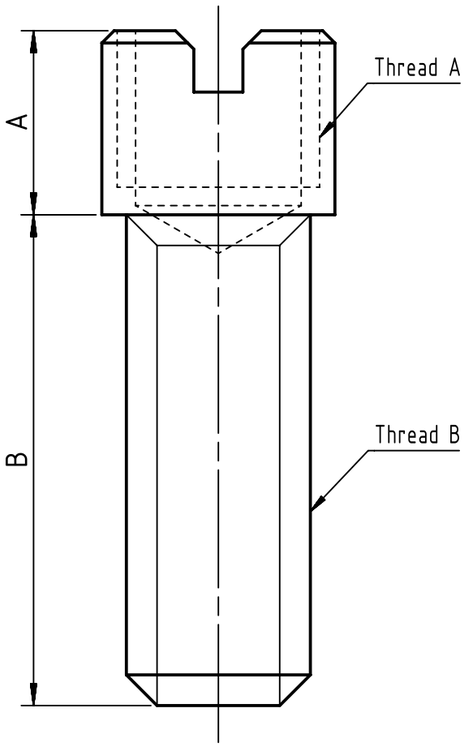

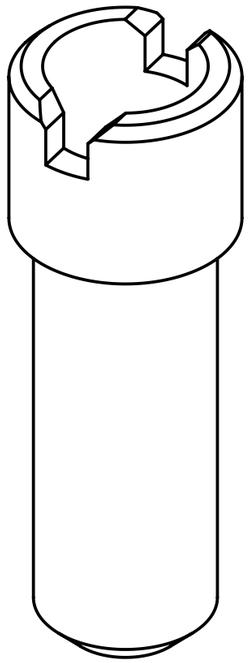

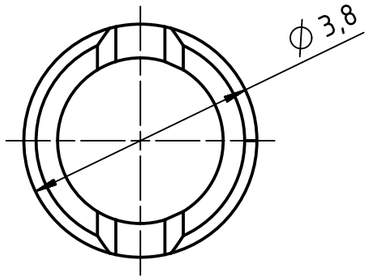

Maximum screw tightening torque is 0,5Nm

	09 67 002 91XX						
-	09 67 002 9148	M3	M3	0,8mm to 1,2mm	Straight	4,9	6,5
	09 67 002 9147	M3	4-40 UNC				
	09 67 002 9146	4-40 UNC	M3				
Standard	**09 67 002 9145**	**4-40 UNC**	**4-40 UNC**				
-	09 67 002 9136	M3	M3		Angled		8,0
	09 67 002 9135	M3	4-40 UNC				
	09 67 002 9134	4-40 UNC	M3				
Standard	**09 67 002 9133**	**4-40 UNC**	**4-40 UNC**				
-	09 67 002 9144	M3	M3	1,2mm to 2,0mm	Straight	4,0	6,5
	09 67 002 9143	M3	4-40 UNC				
	09 67 002 9142	4-40 UNC	M3				
	09 67 002 9141	4-40 UNC	4-40 UNC				
	09 67 002 9132	M3	M3		Angled		8,0
	09 67 002 9131	M3	4-40 UNC				
	09 67 002 9130	4-40 UNC	M3				
	09 67 002 9129	4-40 UNC	4-40 UNC				
	09 67 002 9140	M3	M3	2,0mm to 2,6mm	Straight	3,5	6,5
	09 67 002 9139	M3	4-40 UNC				
	09 67 002 9138	4-40 UNC	M3				
Standard	**09 67 002 9137**	**4-40 UNC**	**4-40 UNC**				
-	09 67 002 9126	M3	M3		Angled		8,0
	09 67 002 9125	M3	4-40 UNC				
	09 67 002 9124	4-40 UNC	M3				
Standard	**09 67 002 9123**	**4-40 UNC**	**4-40 UNC**				
-	Part number	Thread A	Thread B	Panel range	Connector style	Dim A	Dim B

All Dimensions in mm
Original Size DIN A3

Scale 10:1

Free size tol.

Ref.

Sub.

All rights reserved

Department EC PD - CN

HARTING Electronics GmbH
D-32339 Espelkamp

Created by	Inspected by	Standardisation	Date	State
GUOY	WANGSTE	HOFFMANN	2013-09-05	Final Release

Title: D-Sub female screw lock for coding system

Doc-Key / ECM-Nr.
100236607/UGD/001/A
500000065600

Type: TB

Number: 096700291XX

Rev.: A

Page: 1/1

A3

Downloaded from Arrow.com.