CUI Devices is now Same Sky! Learn More

same sky

SERIES: TBL009-500 | DESCRIPTION: TERMINAL BLOCK

FEATURES

- 2~24 poles
- horizontal with board
- interlocking (side)
- push button clamp
- 5.00 mm pitch
- UL safety approval
- IEC 60947-7-4 compliant

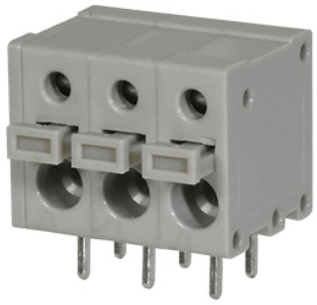



RoHS c UL us

SPECIFICATIONS

parameter	conditions/description	min	typ	max	units
rated voltage (per contact)	UL IEC			300 320	V V
rated current (per contact)	UL IEC			10 17.5	A A
withstanding voltage	for 1 minute		1600		Vac
surge voltage				4000	V
contact resistance				20	mΩ
insulation resistance	at 500 Vdc	500			MΩ
operating temperature		-40		105	°C
safety approvals	UL 1059 certified, IEC 60947-7-4 compliant				
flammability rating	UL94V-0				
RoHS	yes				

SOLDERABILITY

parameter	conditions/description	min	typ	max	units
wave soldering	for maximum 5 seconds		250		°C

PART NUMBER KEY

TBL009-500 - XX XX - 2XX

Base Number

No. of Poles:
02 10 18
03 11 19
04 12 20
05 13 21
06 14 22
07 15 23
08 16 24
09 17

Body Color:
BE = blue
GR = green
OR = orange
YL = yellow
*GY = gray
BK = black

Push Button Color:
BE = blue
GR = green
OR = orange
YL = yellow
*GY = gray
BK = black
WT = white

*Standard housing color is gray with gray push button. All other colors are subject to higher MOQ. Please inquire with Same Sky sales for details.

Downloaded from Arrow.com.

MECHANICAL DRAWING

units: mm
tolerance:
X≤6.00: ±0.20 mm
6.00<X≤10.00: ±0.30 mm
10.00<X≤30.00: ±0.50 mm
30.00<X≤60.00: ±0.70 mm
60.00<X≤100.00: ±1.00 mm
100.00<X≤160.00: ±1.30 mm
X>160.00: ±1.60 mm
unless otherwise noted

DESCRIPTION	MATERIAL	PLATING/COLOR
housing	PA66 (UL94V-0)	
contacts	copper alloy	tin

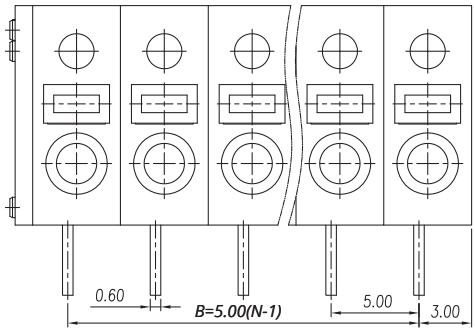

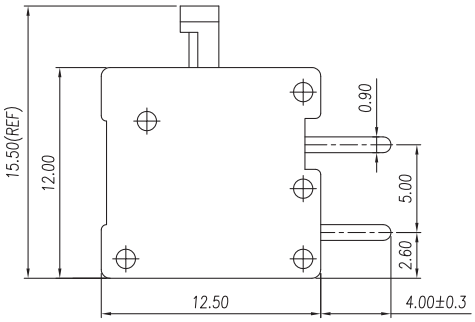

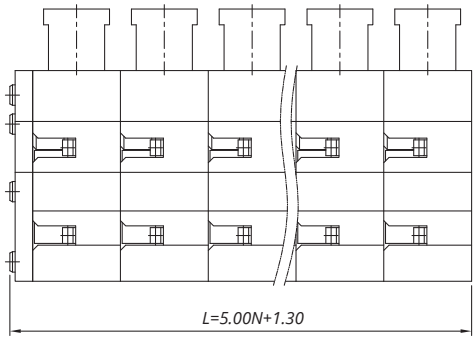

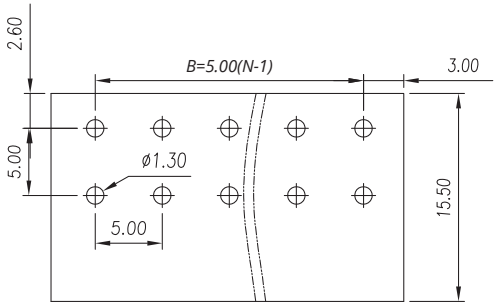

Recommended PCB Layout
Top View

WIRE ASSEMBLY		
	UL	IEC
Wire Range	26~16 AWG	0.2~ 1.5 mm²
Strip Length	11 mm	

This series is constructed of 1 pole modules where L is the total length, P is the pitch, and N is the number of poles.

N	02	03	04	05	06	07	08	09	10	11	12	13
L	11.00	16.00	21.00	26.00	31.00	36.00	41.00	46.00	51.00	56.00	61.00	66.00
B	5.00	10.00	15.00	20.00	25.00	30.00	35.00	40.00	45.00	50.00	55.00	60.00
N	14	15	16	17	18	19	20	21	22	23	24	--
L	71.00	76.00	81.00	86.00	91.00	96.00	101.00	106.00	111.00	116.00	121.00	--
B	65.00	70.00	75.00	80.00	85.00	90.00	95.00	100.00	105.00	110.00	115.00	--

Downloaded from Arrow.com.

REVISION HISTORY

rev.	description	date
1.0	initial release	08/13/2019
1.01	brand update	02/06/2020
1.02	updated datasheet	04/21/2020
1.03	logo, datasheet style update	08/12/2022
1.04	CUI Devices rebranded to Same Sky	09/12/2024
1.05	updated drawing	07/14/2026

The revision history provided is for informational purposes only and is believed to be accurate.

Same Sky offers a one (1) year limited warranty. Complete warranty information is listed on our website.

Same Sky reserves the right to make changes to the product at any time without notice. Information provided by Same Sky is believed to be accurate and reliable. However, no responsibility is assumed by Same Sky for its use, nor for any infringements of patents or other rights of third parties which may result from its use.

Same Sky products are not authorized or warranted for use as critical components in equipment that requires an extremely high level of reliability. A critical component is any component of a life support device or system whose failure to perform can be reasonably expected to cause the failure of the life support device or system, or to affect its safety or effectiveness.

Downloaded from Arrow.com.