THIS DRAWING IS UNPUBLISHED. RELEASED FOR PUBLICATION -
© COPYRIGHT copyright_date- ALL RIGHTS RESERVED.

LOC	DIST
GP	00

REVISIONS

P	LTR	DESCRIPTION	DATE	DWN	APVD
	A1	ADDED NEW DASH-4 WITH PIN HEAT SINK	20DEC2021	AJ	SZ
	A2	"PART NUMBER" TEXT ADDED TO THE CAGE	09NOV2022	KH	SZ
	A3	-6 AND 1-2 NEW PN ADDED	13SEP2023	KH	SZ
	A4	-7 NEW PN ADDED	21JUN2024	KH	SZ

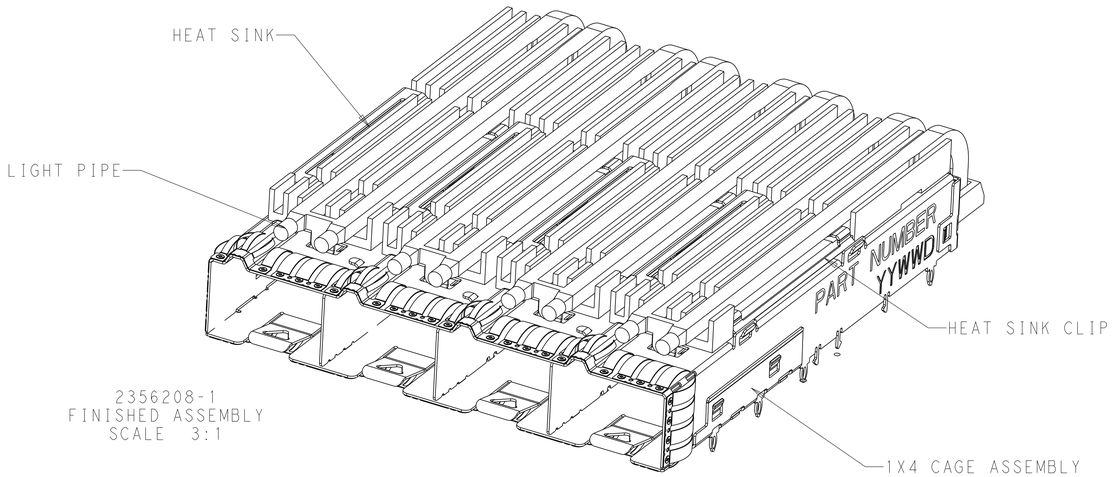

2356208-1
FINISHED ASSEMBLY
SCALE 3:1

1. CAGE: 0.25mm THICK STAINLESS STEEL
   EMI SPRINGS: COPPER ALLOY
   HEAT SINK: ALUMINUM
   HEAT SINK CLIP: STAINLESS STEEL
   LIGHT PIPE: CLEAR POLYCARBONATE
   BELLY GASKET: RF ABSORBER

2. FINISH:
   SPRINGS: 0.8um NICKEL.NON-PLATED EDGES PERMISSIBLE.
   HEAT SINK:SEE TABLE

3. MATES WITH SFP-DD MSA COMPLIANT TRANSCEIVERS.

4. INTERPRETATION OF DATUM REFERENCE FRAME IN ACCORDANCE WITH SECT 4.4.1.1 OF ASME Y14.5M-1994.

5. MINIMUM PC BOARD THICKNESS:
   SINGLE SIDED = 1.57mm
   DOUBLE SIDED = 2.20mm

6. DATUM AND BASIC DIMENSION ESTABLISHED BY CUSTOMER.

7. REFERENCE APPLICATION SPEC. 114-60027, HOLE A, FOR RECOMMENDED DRILL HOLE DIAMETER AND PLATING THICKNESS.

8. REFERENCE APPLICATION SPEC. 114-60027, HOLE B, FOR RECOMMENDED DRILL HOLE DIAMETER AND PLATING THICKNESS.

9. HOLE PATTERN REPEATS FOR EACH PORT. SPACING BETWEEN PORTS IS 14.25mm.

10. DATUM -A- IS TOP SURFACE OF THE HOST BOARD.

11. HEAT SINK HEIGHT IS APPLIED AFTER MODULE INSERTED.

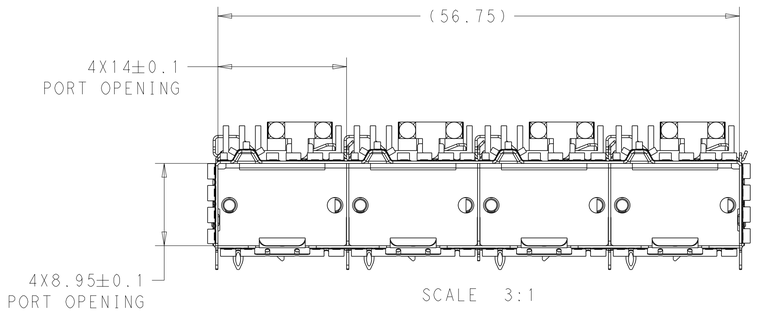

SCALE 3:1

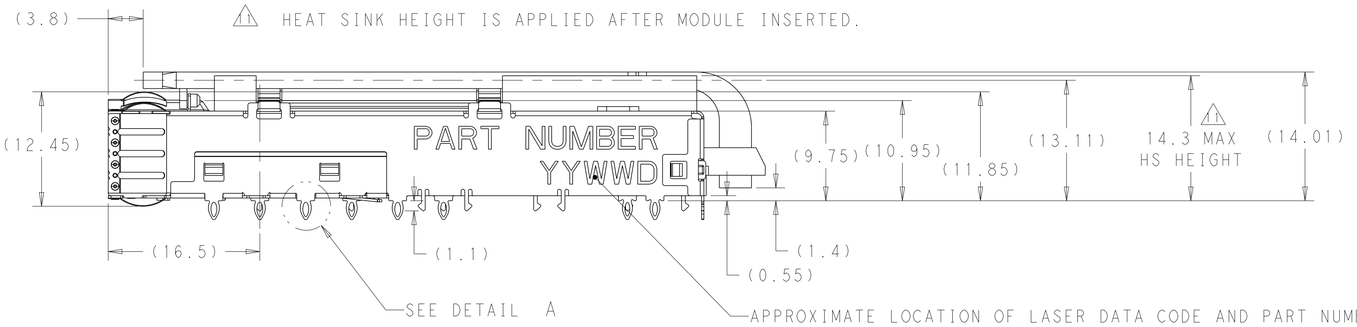

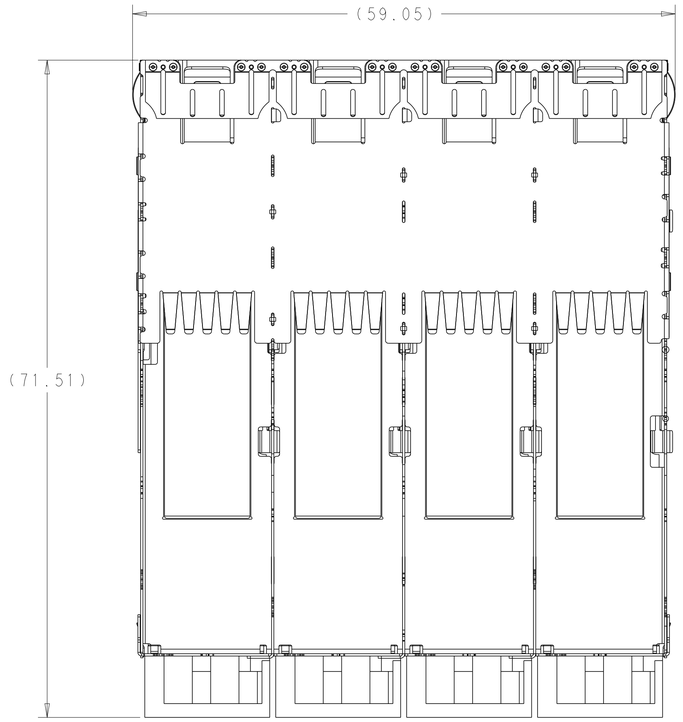

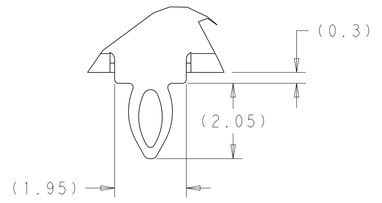

DETAIL A
SCALE 12:1

WITH	BLADE	WITH	NICKLE PLATING	2356208-7
WITH	BLADE	WITHOUT	NICKLE PLATING	1-2356208-2
WITH	BLADE	WITH	NICKLE PLATING	2356208-6
WITHOUT	PIN	WITH	BLACK ANODIZATION	2356208-4
WITHOUT	BLADE	WITHOUT	NICKLE PLATING	1-2356208-1
WITHOUT	BLADE	WITH	BLACK ANODIZATION	2356208-3
WITHOUT	BLADE	WITH	BLACK ANODIZATION	2356208-2
WITHOUT	BLADE	WITH	NICKLE PLATING	2356208-1
BELLY GASKET	HEAT SINK TYPE	LP	HEAT SINK FINISH	PART NUMBER

THIS DRAWING IS A CONTROLLED DOCUMENT.

DWN VINDY LIU 08MAY2019
CHK SEAN HAN 08MAY2019
APVD
PRODUCT SPEC 108-60128
APPLICATION SPEC 114-60027
WEIGHT -

DIMENSIONS: mm
TOLERANCES UNLESS OTHERWISE SPECIFIED:
0 PLC ±0.25
1 PLC ±0.25
2 PLC ±0.20
3 PLC ±0.20
4 PLC ±
ANGLES ±-
MATERIAL 1
FINISH - -

TE Connectivity

NAME SFPDD 1X4 CAGE ASSEMBLY W/LP HS PRESS-FIT, EXTERNAL EMI SPRINGS -

SIZE	CAGE CODE	DRAWING NO	RESTRICTED TO
A1	00779	C-2356208	-

CUSTOMER DRAWING | SCALE 1:1 | SHEET 1 OF 8 | REV A4

4805 (3/11)

Downloaded from Arrow.com.

THIS DRAWING IS UNPUBLISHED. RELEASED FOR PUBLICATION -
© COPYRIGHT copyright_date ALL RIGHTS RESERVED.

LOC	DIST
GP	00

REVISIONS

P	LTR	DESCRIPTION	DATE	DWN	APVD
	-	SEE SHEET 1	-	-	-

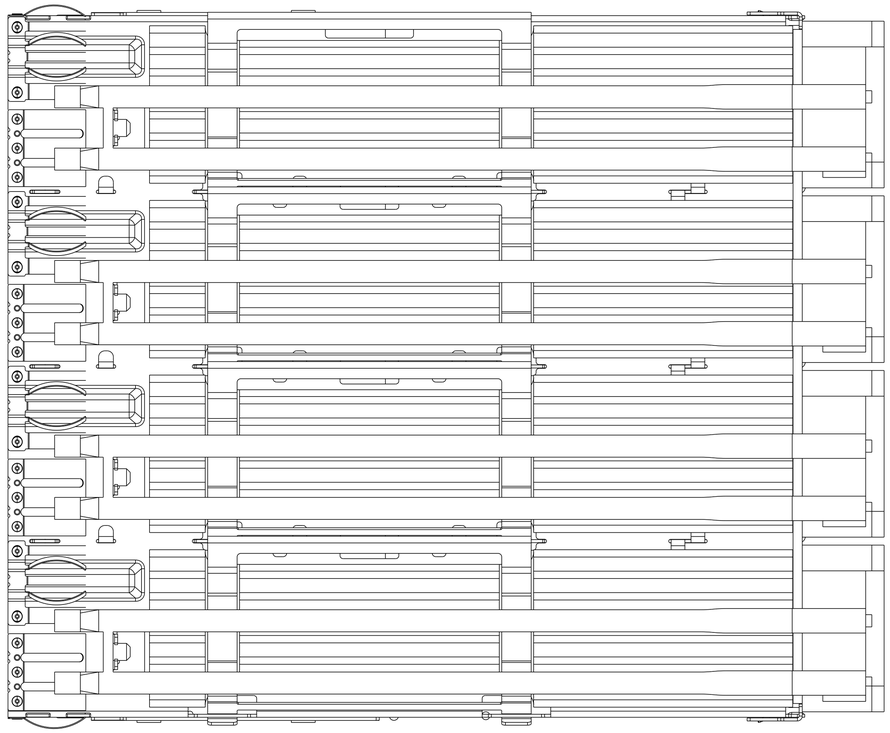

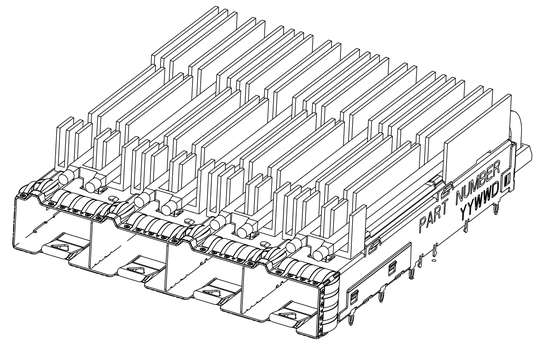

2356208-2 AS SHOWN
SCALE 2:1

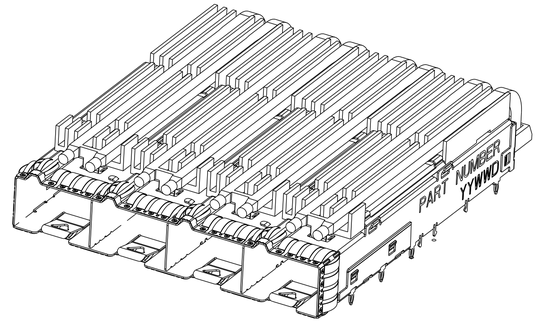

2356208-3 AS SHOWN
SCALE 2:1

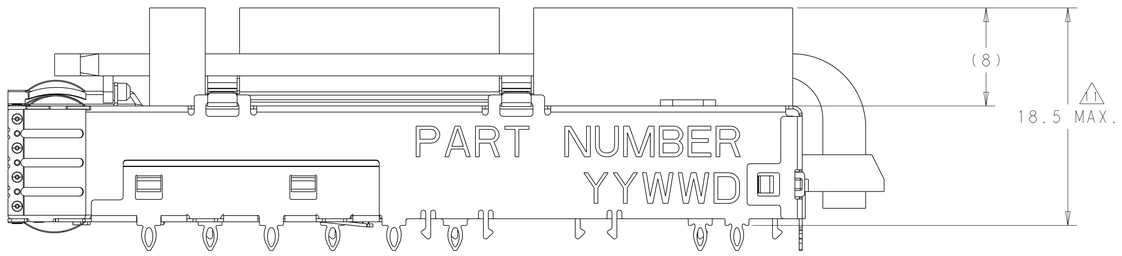

2356208-2 AS SHOWN
UNSPECIFIED DIMENSION SAME AS -1
SCALE 4:1

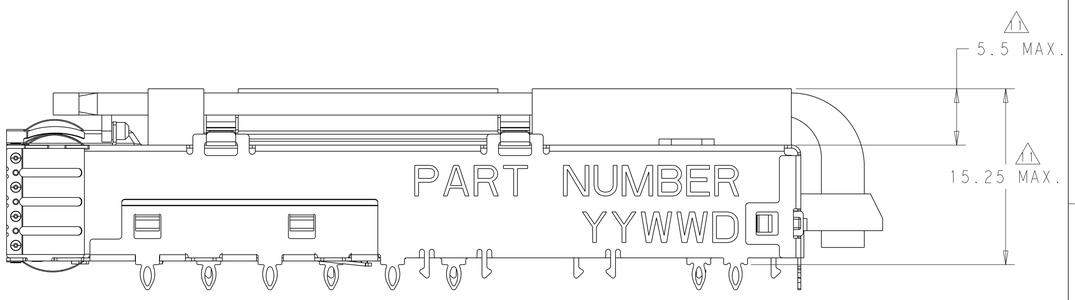

2356208-3 AS SHOWN
UNSPECIFIED DIMENSION SAME AS -1
SCALE 4:1

THIS DRAWING IS A CONTROLLED DOCUMENT.

DIMENSIONS: mm

TOLERANCES UNLESS OTHERWISE SPECIFIED:

0 PLC	±0.25
1 PLC	±0.25
2 PLC	±0.20
3 PLC	±0.20
4 PLC	±
ANGLES	±

MATERIAL

FINISH - -

DWN VINDY LIU 08MAY2019
CHK SEAN HAN 08MAY2019
APVD
PRODUCT SPEC 108-60128
APPLICATION SPEC 114-60027
WEIGHT -

TE Connectivity

NAME SFPDD 1X4 CAGE ASSEMBLY W/LP HS PRESS-FIT, EXTERNAL EMI SPRINGS -

SIZE	CAGE CODE	DRAWING NO	RESTRICTED TO
A1	00779	C-2356208	-

CUSTOMER DRAWING | SCALE 1:1 | SHEET 2 OF 8 | REV A4

Downloaded from Arrow.com.

THIS DRAWING IS UNPUBLISHED. RELEASED FOR PUBLICATION -
© COPYRIGHT copyright_dBYe- ALL RIGHTS RESERVED.

LOC	DIST
GP	00

REVISIONS

P	LTR	DESCRIPTION	DATE	DWN	APVD
	-	SEE SHEET 1	-	-	-

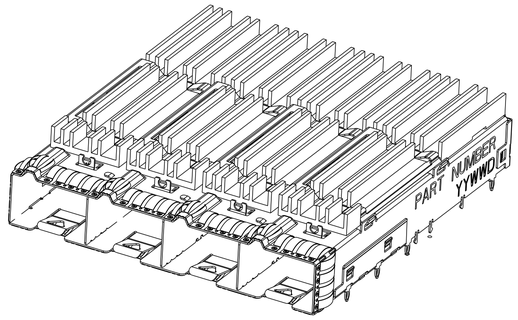

1-2356208-1
SCALE 2:1

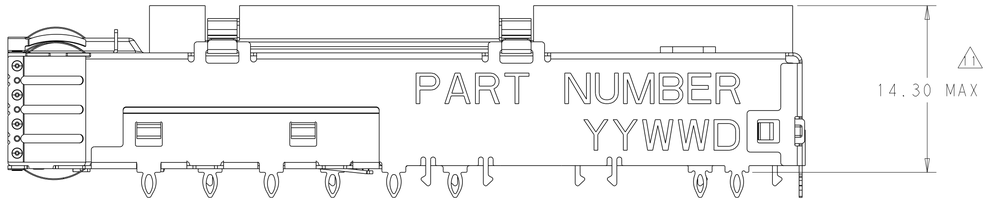

1-2356208-1 IS SAME AS 2356208-1 EXCEPT WITHOUT LP
SCALE 4:1

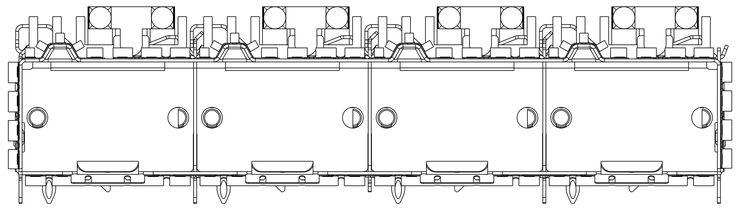

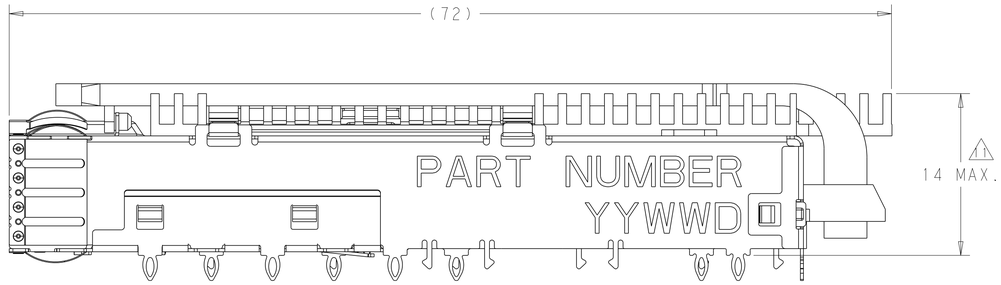

2356208-4 AS SHOWN WITH PIN HEAT SINK
UNSPECIFIED DIMENSIONS ARE SAME AS -1
SCALE 4:1

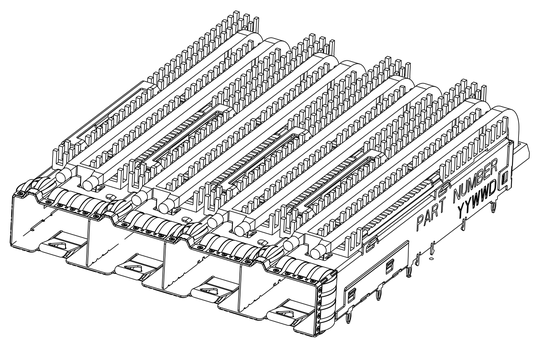

2356208-4
SCALE 2:1

THIS DRAWING IS A CONTROLLED DOCUMENT.

DIMENSIONS: mm

TOLERANCES UNLESS OTHERWISE SPECIFIED:
0 PLC ±0.25
1 PLC ±0.25
2 PLC ±0.20
3 PLC ±0.20
4 PLC ±
ANGLES ±-

MATERIAL

FINISH - -

DWN VINDY LIU 08MAY2019
CHK SEAN HAN 08MAY2019
APVD

PRODUCT SPEC 108-60128
APPLICATION SPEC 114-60027
WEIGHT -

TE Connectivity

NAME SFPDD 1X4 CAGE ASSEMBLY W/LP HS PRESS-FIT, EXTERNAL EMI SPRINGS -

SIZE	CAGE CODE	DRAWING NO	RESTRICTED TO
A1	00779	C-2356208	-

CUSTOMER DRAWING | SCALE 1:1 | SHEET 3 OF 8 | REV A4

4805 (3/11)

Downloaded from Arrow.com.

THIS DRAWING IS UNPUBLISHED. RELEASED FOR PUBLICATION -
© COPYRIGHT copyright_date ALL RIGHTS RESERVED.

LOC	DIST
GP	00

REVISIONS

P	LTR	DESCRIPTION	DATE	DWN	APVD
	-	SEE SHEET 1	-	-	-

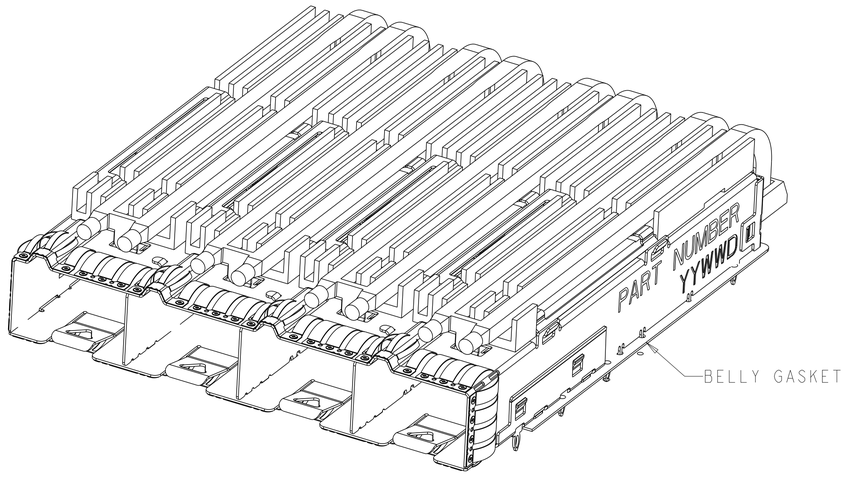

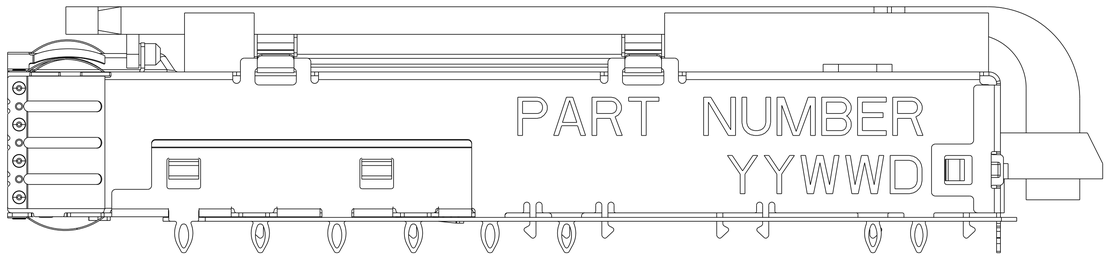

SCALE 3:1
2356208-6 AS SHOWN WITH BELLY GASKET
UNSPECIFIED DIMENSIONS ARE SAME AS 2356208-1

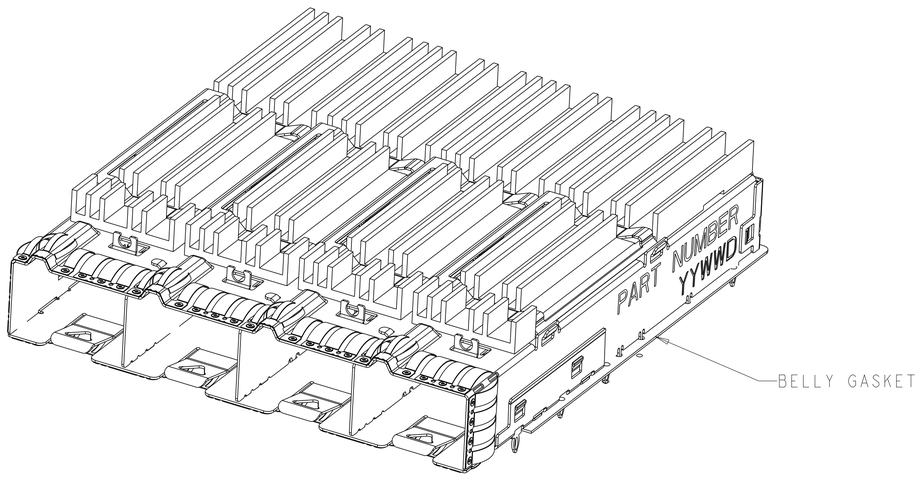

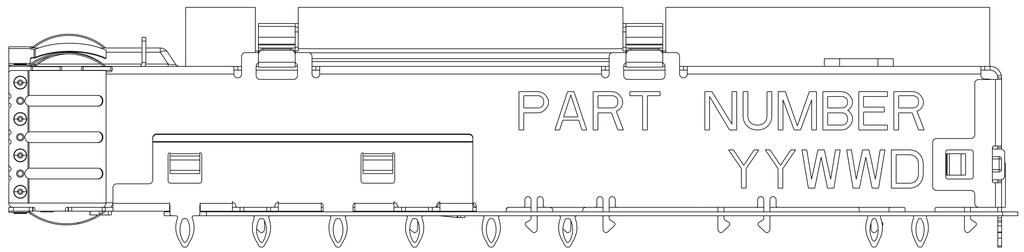

SCALE 3:1
1-2356208-2 AS SHOWN WITH BELLY GASKET AND WITHOUT LP
UNSPECIFIED DIMENSIONS ARE SAME AS 2356208-1

THIS DRAWING IS A CONTROLLED DOCUMENT.

DIMENSIONS: mm

TOLERANCES UNLESS OTHERWISE SPECIFIED:
0 PLC ±0.25
1 PLC ±0.25
2 PLC ±0.20
3 PLC ±0.20
4 PLC ±
ANGLES ±

MATERIAL

FINISH - -

DWN VINDY LIU 08MAY2019
CHK SEAN HAN 08MAY2019
APVD

PRODUCT SPEC 108-60128
APPLICATION SPEC 114-60027
WEIGHT -

TE Connectivity

NAME SFPDD 1X4 CAGE ASSEMBLY W/LP HS PRESS-FIT, EXTERNAL EMI SPRINGS -

SIZE	CAGE CODE	DRAWING NO	RESTRICTED TO
A1	00779	C-2356208	-

CUSTOMER DRAWING | SCALE 1:1 | SHEET 4 OF 8 | REV A4

Downloaded from Arrow.com.

THIS DRAWING IS UNPUBLISHED. RELEASED FOR PUBLICATION -
© COPYRIGHT copyright_dBYe- ALL RIGHTS RESERVED.

LOC	DIST
GP	00

REVISIONS

P	LTR	DESCRIPTION	DATE	DWN	APVD
	-	SEE SHEET 1	-	-	-

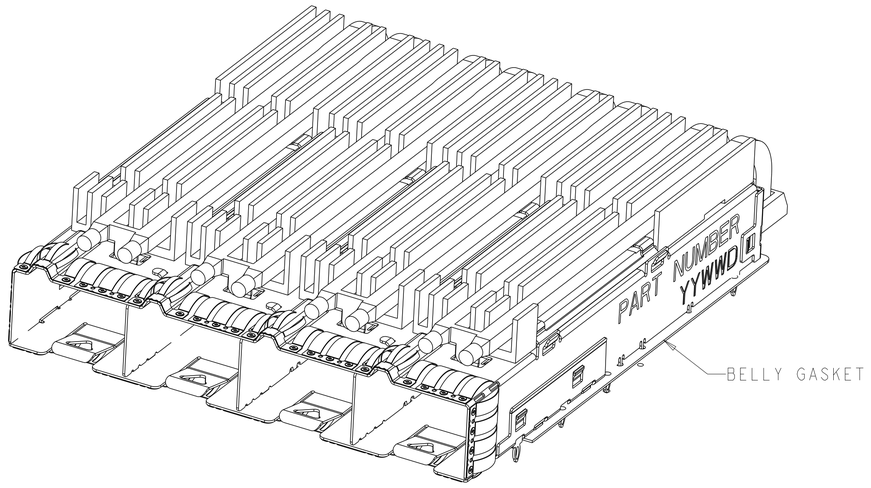

SCALE 3:1
2356208-7 AS SHOWN
UNSPECIFIED DIMENSIONS ARE SAME AS 2356208-6

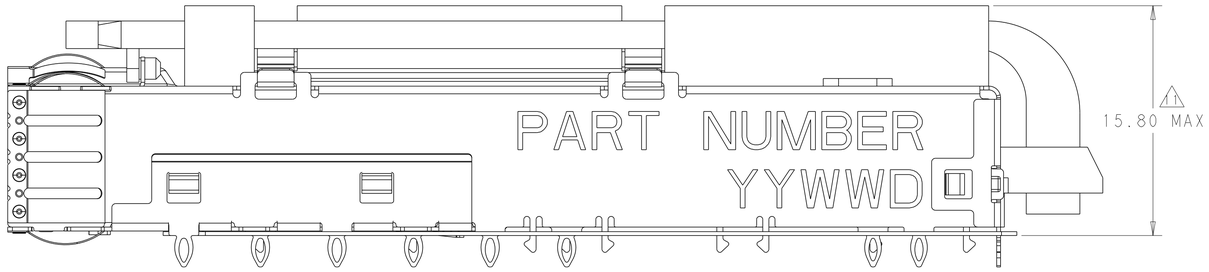

THIS DRAWING IS A CONTROLLED DOCUMENT.

DIMENSIONS: mm

TOLERANCES UNLESS OTHERWISE SPECIFIED:

0 PLC	±0.25
1 PLC	±0.25
2 PLC	±0.20
3 PLC	±0.20
4 PLC	±
ANGLES	±-

MATERIAL

FINISH - -

DWN VINDY LIU 08MAY2019
CHK SEAN HAN 08MAY2019
APVD

PRODUCT SPEC 108-60128
APPLICATION SPEC 114-60027
WEIGHT -

TE Connectivity

NAME SFPDD 1X4 CAGE ASSEMBLY W/LP HS PRESS-FIT, EXTERNAL EMI SPRINGS -

SIZE	CAGE CODE	DRAWING NO	RESTRICTED TO
A1	00779	C-2356208	-

CUSTOMER DRAWING | SCALE 1:1 | SHEET 5 OF 8 | REV A4

Downloaded from Arrow.com.

THIS DRAWING IS UNPUBLISHED. RELEASED FOR PUBLICATION -
© COPYRIGHT copyright_dBYe- ALL RIGHTS RESERVED.

LOC	DIST
GP	00

REVISIONS

P	LTR	DESCRIPTION	DATE	DWN	APVD
	-	SEE SHEET 1	-	-	-

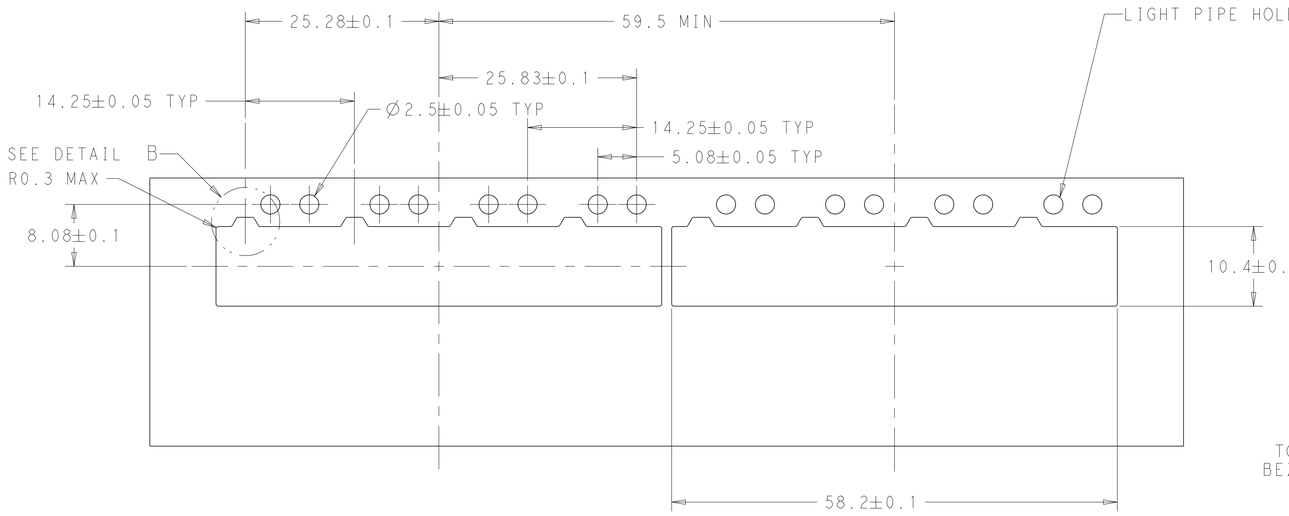

RECOMMENDED BEZEL CUT-OUT
SINGLE SIDED APPLICATIONS
SCALE 5:2

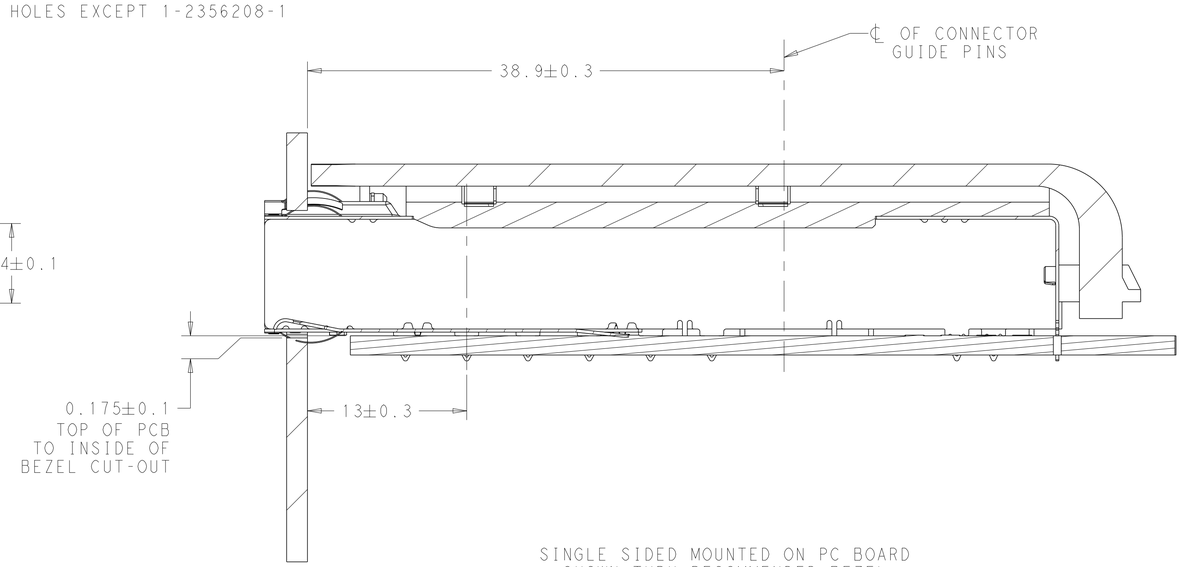

SINGLE SIDED MOUNTED ON PC BOARD
SHOWN THRU RECOMMENDED BEZEL
SECTION BEZEL-BEZEL
SCALE 4:1

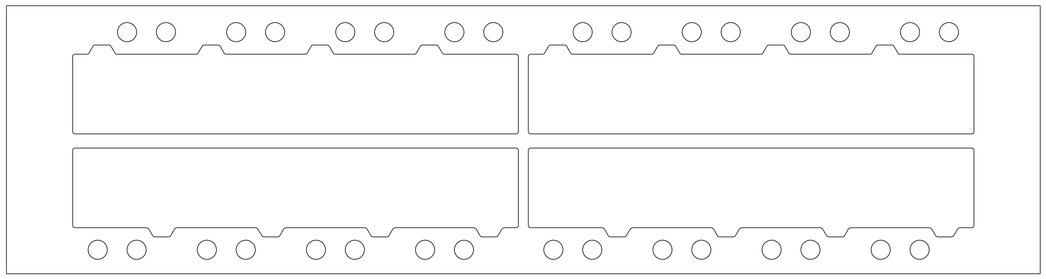

RECOMMENDED BEZEL CUT-OUT
BELLY TO BELLY APPLICATIONS
SCALE 5:2

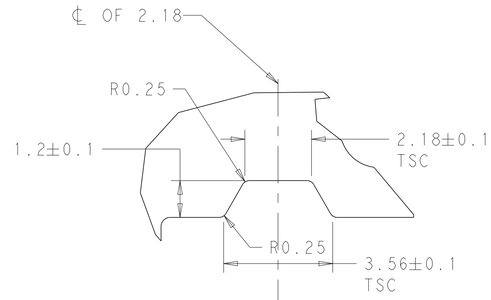

DETAIL B
SCALE 10:1

THIS DRAWING IS A CONTROLLED DOCUMENT.

DIMENSIONS: mm

TOLERANCES UNLESS OTHERWISE SPECIFIED:
0 PLC ±0.25
1 PLC ±0.25
2 PLC ±0.20
3 PLC ±0.20
4 PLC ±
ANGLES ±-

MATERIAL 1
FINISH - -

DWN VINDY LIU 08MAY2019
CHK SEAN HAN 08MAY2019
APVD
PRODUCT SPEC 108-60128
APPLICATION SPEC 114-60027
WEIGHT -

TE Connectivity

NAME SFPDD 1X4 CAGE ASSEMBLY W/LP HS PRESS-FIT, EXTERNAL EMI SPRINGS -

SIZE	CAGE CODE	DRAWING NO	RESTRICTED TO
A1	00779	C-2356208	-

CUSTOMER DRAWING | SCALE 1:1 | SHEET 6 OF 8 | REV A4

4805 (3/11)

Downloaded from Arrow.com.

THIS DRAWING IS UNPUBLISHED. RELEASED FOR PUBLICATION -
© COPYRIGHT copyright_dsyr- ALL RIGHTS RESERVED.

LOC	DIST
GP	00

REVISIONS

P	LTR	DESCRIPTION	DATE	DWN	APVD
	-	SEE SHEET 1	-	-	-

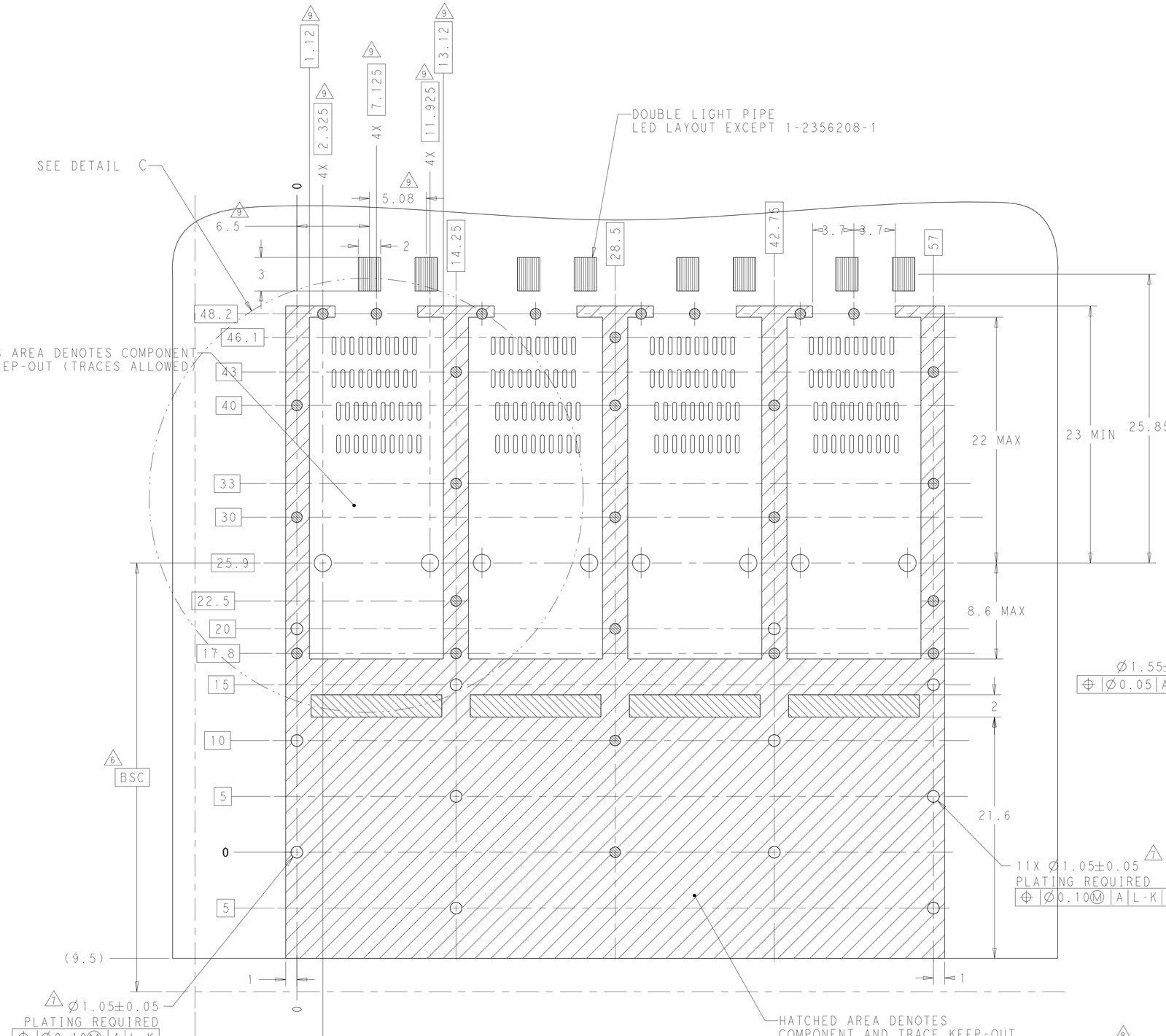

RECOMMENDED PCB CONFIGURATION
WITH KEEP-OUT AREAS
SINGLE SIDED APPLICATIONS
SCALE 5:1

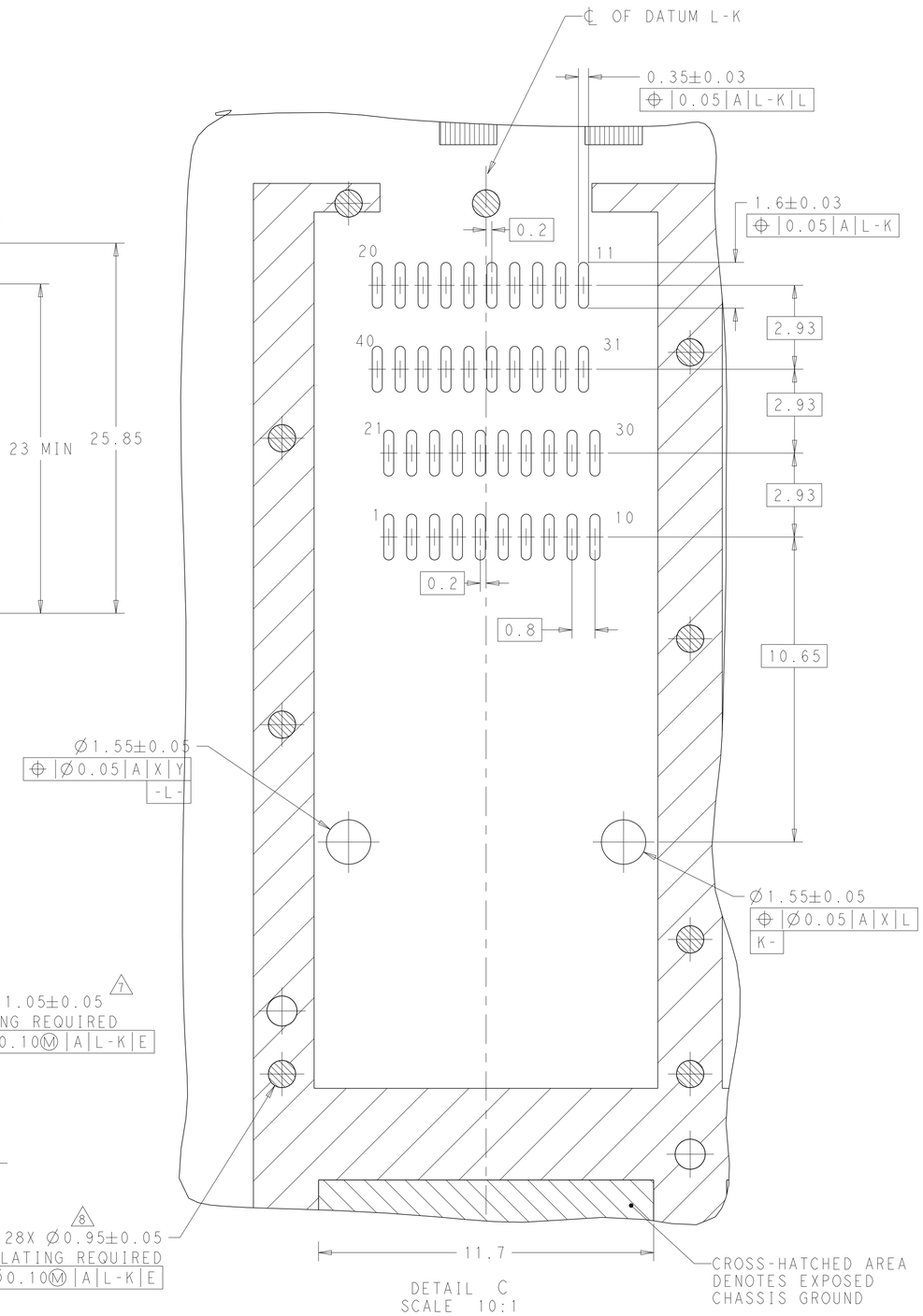

DETAIL C
SCALE 10:1

THIS DRAWING IS A CONTROLLED DOCUMENT.	DWN VINDY LIU 08MAY2019	TE Connectivity	
DIMENSIONS: mm	CHK SEAN HAN 08MAY2019	NAME SFPDD 1X4 CAGE ASSEMBLY W/LP HS PRESS-FIT, EXTERNAL EMI SPRINGS -	
TOLERANCES UNLESS OTHERWISE SPECIFIED: 0 PLC ±0.25, 1 PLC ±0.25, 2 PLC ±0.20, 3 PLC ±0.20, 4 PLC ±, ANGLES ±-	APVD		
	PRODUCT SPEC 108-60128		
	APPLICATION SPEC 114-60027	SIZE A1 / CAGE CODE 00779 / DRAWING NO C-2356208	RESTRICTED TO -
MATERIAL 1	WEIGHT -		
FINISH - -	CUSTOMER DRAWING	SCALE 1:1 / SHEET 7 OF 8	REV A4

Downloaded from Arrow.com.

THIS DRAWING IS UNPUBLISHED. RELEASED FOR PUBLICATION -
© COPYRIGHT copyright_date ALL RIGHTS RESERVED.

LOC	DIST
GP	00

REVISIONS

P	LTR	DESCRIPTION	DATE	DWN	APVD
	-	SEE SHEET 1	-	-	-

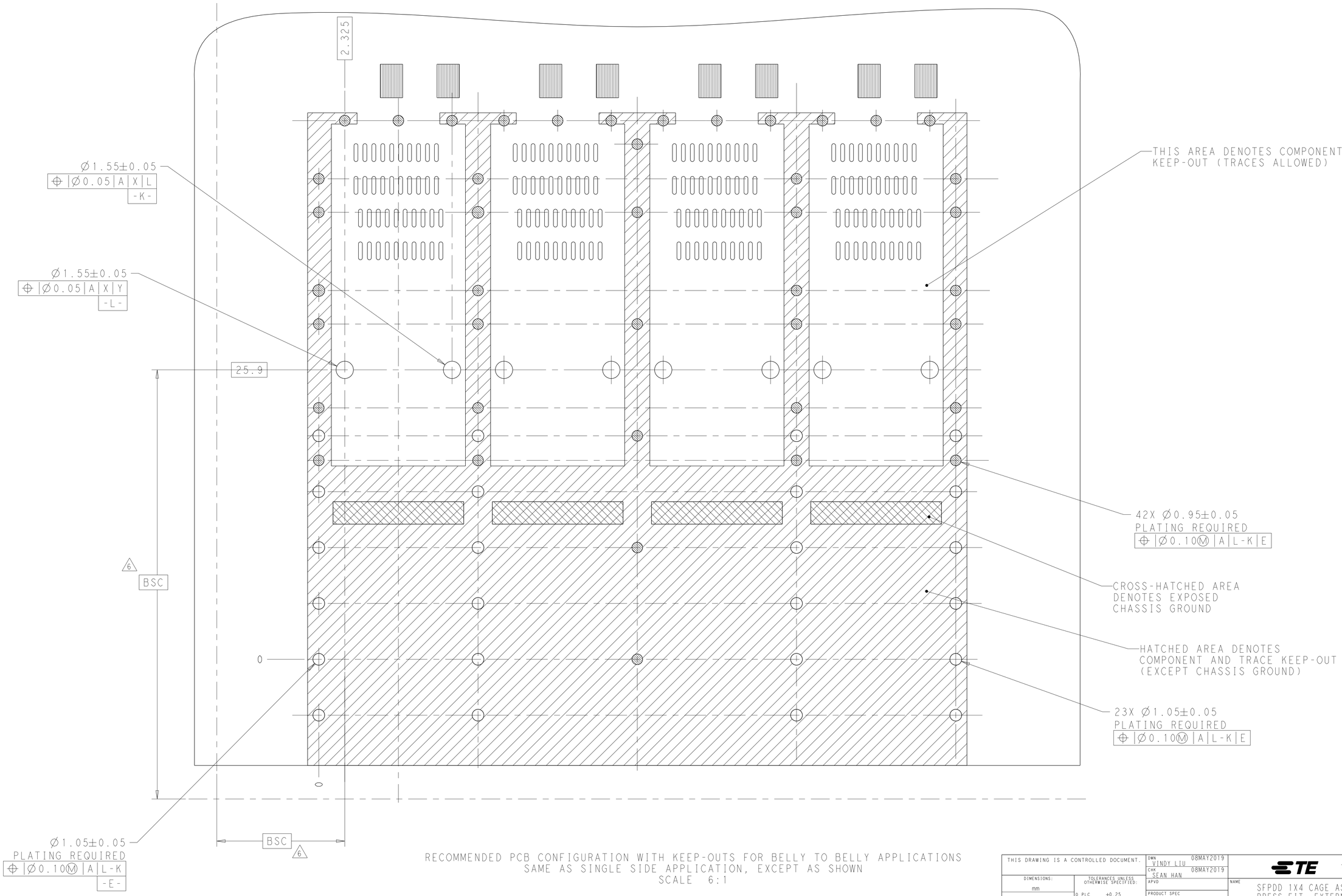

RECOMMENDED PCB CONFIGURATION WITH KEEP-OUTS FOR BELLY TO BELLY APPLICATIONS
SAME AS SINGLE SIDE APPLICATION, EXCEPT AS SHOWN
SCALE 6:1

THIS DRAWING IS A CONTROLLED DOCUMENT.

DIMENSIONS: mm

TOLERANCES UNLESS OTHERWISE SPECIFIED:
0 PLC ±0.25
1 PLC ±0.25
2 PLC ±0.20
3 PLC ±0.20
4 PLC ±
ANGLES ±

MATERIAL 1

FINISH - -

DWN VINDY LIU 08MAY2019
CHK SEAN HAN 08MAY2019
APVD
PRODUCT SPEC 108-60128
APPLICATION SPEC 114-60027
WEIGHT -

TE Connectivity

NAME SFPDD 1X4 CAGE ASSEMBLY W/LP HS PRESS-FIT, EXTERNAL EMI SPRINGS -

SIZE	CAGE CODE	DRAWING NO	RESTRICTED TO
A1	00779	C-2356208	-

CUSTOMER DRAWING | SCALE 1:1 | SHEET 8 OF 8 | REV A4

4805 (3/11)

Downloaded from Arrow.com.