used for: D-SUB COMBINATION

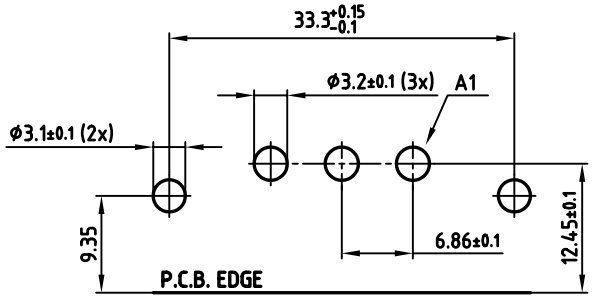

P.C.B. HOLE DRILLINGS

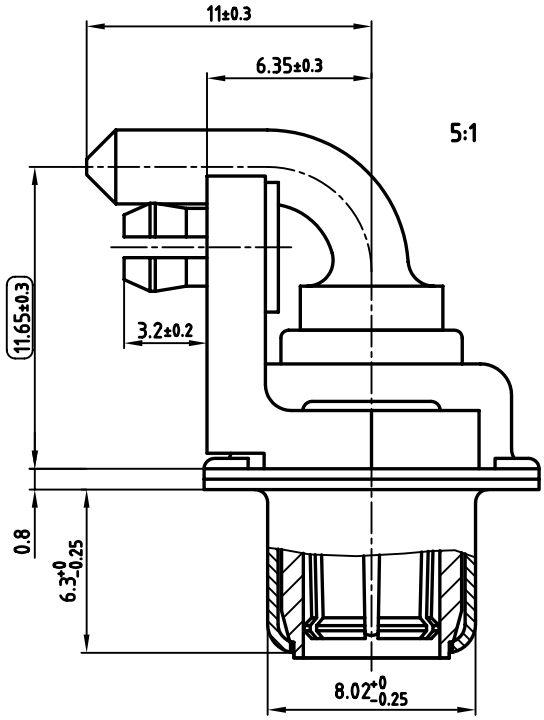

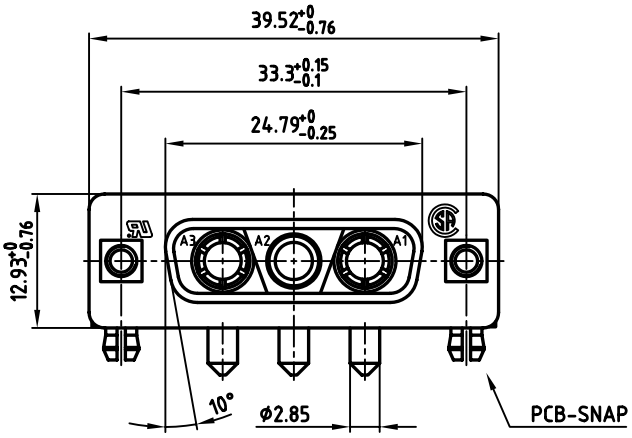

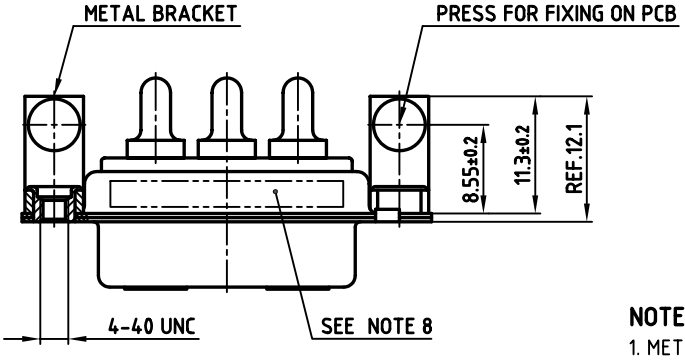

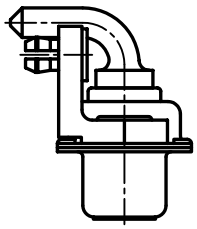

NOTES:

1. METALSHELLS: STEEL; min. 320µ" TIN
2. INSULATORS: PBT GF UL 94 V-0, GREEN
3. HIGH POWER CONTACTS 20A: COPPER ALLOY
   PLATING: 30µ" HARD GOLD OVER min. 50µ" NICKEL
   FEMALE CONTACT ON POS. A1 + A3
   MALE CONTACT ON POS. A2
4. METAL BRACKET: DIE CASTING; min. 320µ" TIN over 80µ" NICKEL
5. THREADED INSERT: COPPER ALLOY; min. 200µ" TIN over 80µ" NICKEL
6. PCB-SNAP: COPPER ALLOY; min. 200µ" TIN over 80µ" NICKEL
   PCB-HOLE: Ø3.1±0.1; PCB THICKNESS 1.6mm
7. MAXIMUM TORQUE VALUE FOR THREAD: 6" LBS
8. CONNECTOR IS PART MARKED: 303W3CSXX56N40X CONEC ABC
9. ( ) = CHECK DIMENSION

Directive 2002/95/EC „RoHS" Compliant

APPROVAL # FREIGABE # DEBLOCAGE # AUTORIZACION # APPROVAL

CUSTOMER APPROVAL DATE:

NAME: TITLE:

COMPANY NAME:

APPROVAL # FREIGABE # DEBLOCAGE # AUTORIZACION # APPROVAL

THIS DRAWING MAY NOT BE COPIED OR REPRODUCED IN ANY WAY, AND MAY NOT BE PASSED ON TO A THIRD PARTY WITHOUT WRITTEN PERMISSION. OWNERSHIP AND COPYRIGHT OF CONEC GmbH

DO NOT ALTER CAD DRAWING BY HAND

rev.	description	date	name
a	Origin		

tolerance

dim. in mm

	date	name
2006		
drawn	09.02.	Lehmenkühler
appd.	09.02.	Mickenbecker
norm		
d-old		

CONEC®

scale: 2:1 (5:1)

material: SEE NOTES

title:

D-SUB COMBINATION FEMALE 90°

3W3CS

with threaded insert, metal bracket and clip

dwg no: 13K1A1715

AutoCAD 2004 | DIN-A 3 | sh: 1/1

part no: 303W3CSXX56N40X

Downloaded from Arrow.com.