Alle Rechte vorbehalten/ All rights reserved

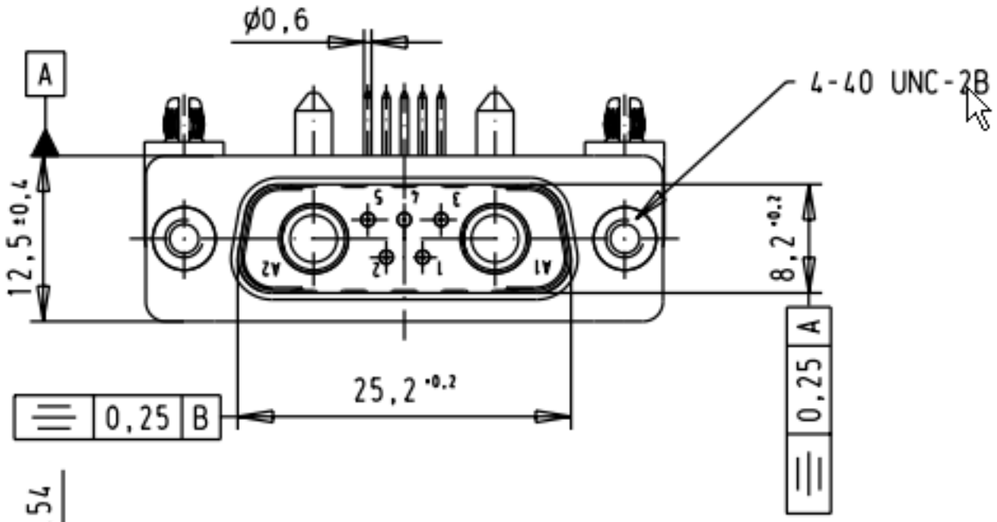

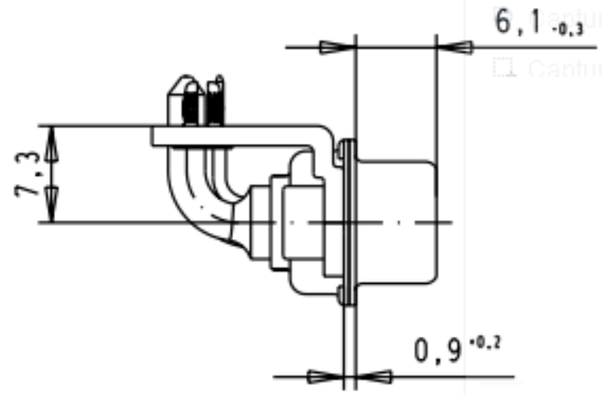

PCB layout, component side,
PCB thickness 1,6mm

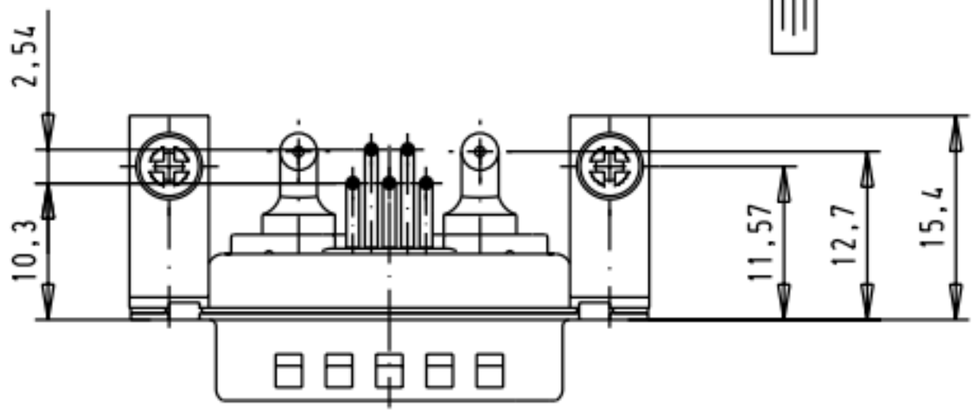

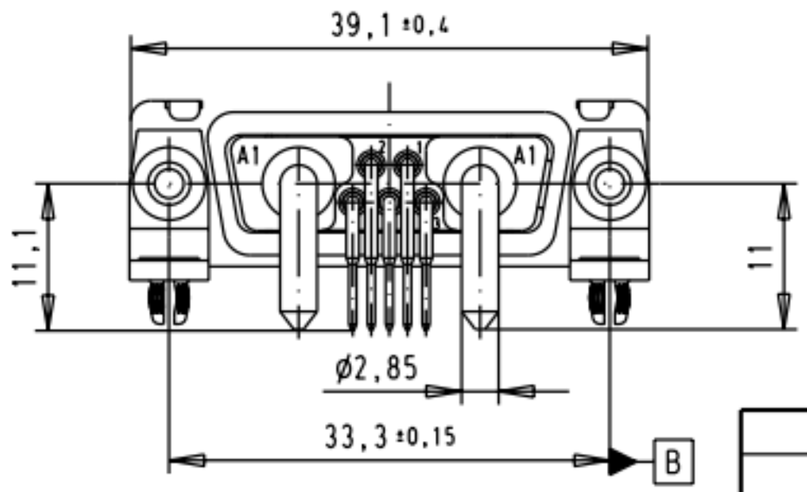

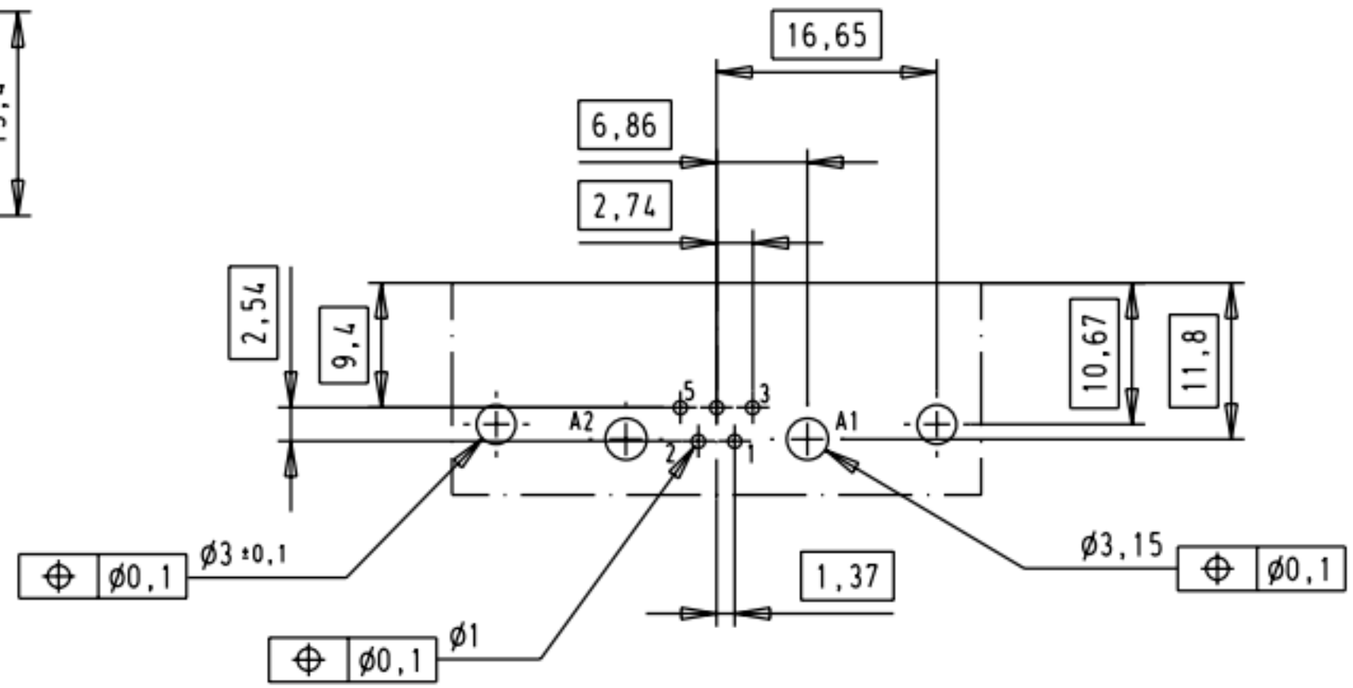

				Dat.	Name		
			Detail.	9-JUL-02	CV	All Dim. in mm Orig. Size DIN A 4	D-Sub, male, angled, 7W2 20 Amp, solder, with tin plated shell with dimples, nut and clip
			Insp.				
			Stand.				
31059	9-JUL-02	CV	HARTING EURL F-95972 Paris			TB 09692009032	
Mod.	Dat.	Name				Sub.	

Maßstab/ Scale: 1.5:1

Blatt/ Page: 1

Downloaded from Arrow.com.