THIS DRAWING IS UNPUBLISHED. RELEASED FOR PUBLICATION 2017
© COPYRIGHT 2017 TE Connectivity Germany GmbH ALL RIGHTS RESERVED.

Project-Number PRJ-17-000904429

REVISIONS					
P	LTR	DESCRIPTION	DATE	DRN	APVD
	A1	INITIAL RELEASE	20MAR2018	AN	AB
	A2	ECR-18-006178	23APR2018	AN	KK
	A3	ECR-19-013921	31JAN2019	KK	AB
	A4	PCN-22-142062	07JUL2022	FRAN	SCHO

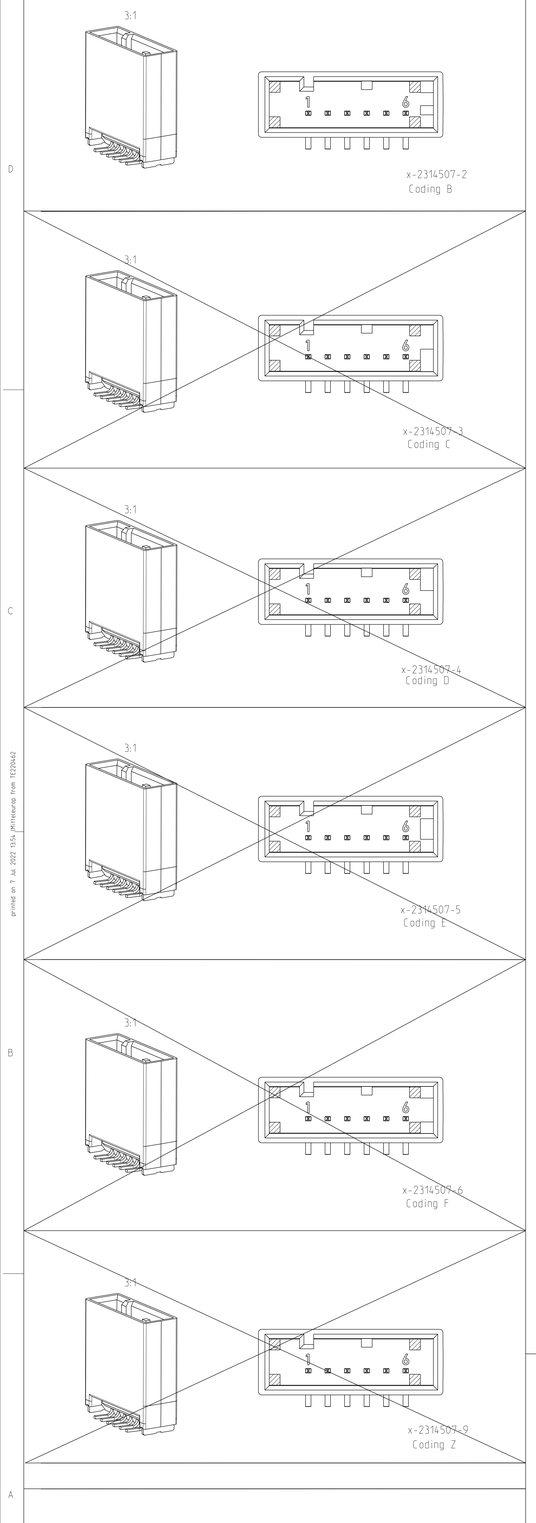

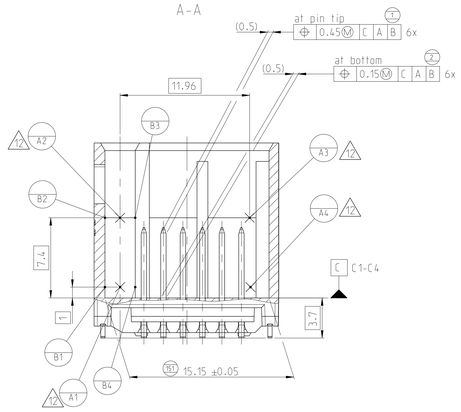

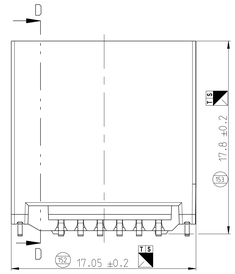

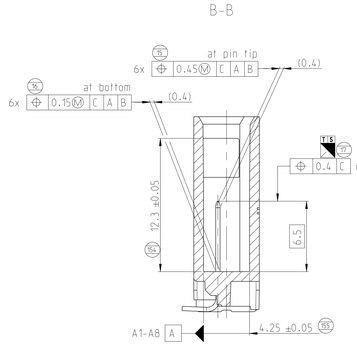

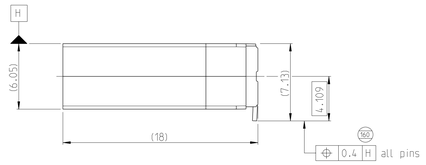

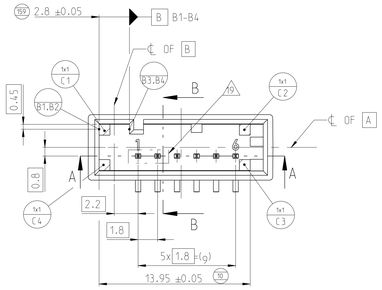

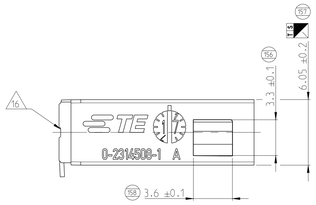

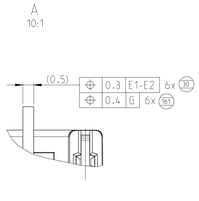

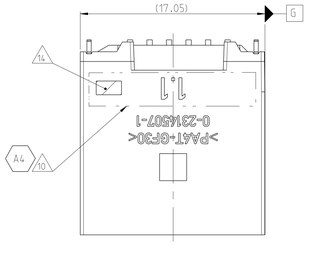

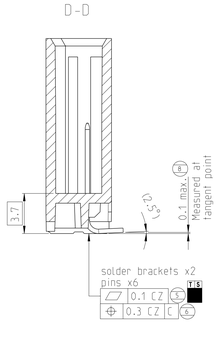

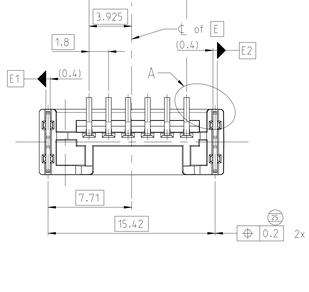

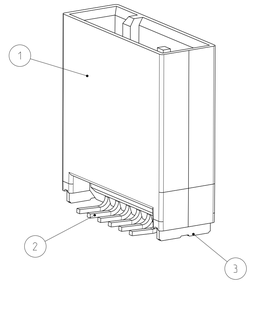

NOTES
Bemerkungen

201 1 PRESS OUT FORCE FOR NANOMQS CONTACT >15N WITH FEED RATE 25mm/min
Kontaktausdrueckkraft fuer NanoMQS Kontakt >15N mit Vorschubgeschwindigkeit 25mm/min

202 2 PRESS OUT FORCE FOR SOLDER BRACKET >60N WITH FEED RATE 25mm/min
Kontaktausdrueckkraft fuer Loetblech >60N mit Vorschubgeschwindigkeit 25mm/min

203 3 INTERFACES ACC. TO 208-18060. REV. A1 AND 114-94000-17. REV. B1
Schnittstellen nach 208-18060. Rev. A1 und 114-94000-17. Rev. B1

204 4 INTERFACE IS NOT PART OF PPAP; TE CONNECTIVITY IS RESPONSIBLE FOR CONNECTOR SYSTEM
Schnittstelle ist nicht Bestandteil des PPAP. TE Connectivity ist verantwortlich fuer Stecksystem

205 5 TOLERANCES ACC. TO DIN EN ISO 8015. DIN EN ISO 14405-1
GENERAL TOL. ACC. TO DIN 16742 TG5. EXCEPT ANGLE DIM. (SEE TITLE BLOCK)
Tolerierung nach DIN EN ISO 8015. DIN EN ISO 14405-1
Allgemeintoleranzen nach DIN 16742 TG5. ausser Winkelmasse (siehe Schriftkopf)

206 6 PACKAGING IN TAPE & REEL ACC. TO V2314507
Verpackung in Tape & Reel nach V2314507

207 7 SOLDER BRACKET SURFACE 3-8µm Sn OVER 1.0-2.5µm Ni
Loetblechoberflaeche 3-8µm Sn ueber 1.0-2.5µm Ni

208 8 CONTACT SURFACE SOLDER SIDE 3-8µm Sn OVER 1.0-2.5µm Ni. MATING SIDE Sn ACC. 114-94201
Kontaktoberflaeche Loetseitig 3-8µm Sn ueber 1.0-2.5µm Ni. Steckseite Sn nach 114-94201

209 9 FOR MISSING DIMENSION SEE CAD-MODEL 2314507.
Fehlende Masse sind dem CAD-Model 2314507. zu entnehmen

A4 210 10 AREA OF GOOD PART MARKING: WITH PUNCH MARK OR LASER MARKING
Bereich der Gutteilmarkierung: Mit Koernerpunkt oder Lasermarkierung

211 11 ELECTRICAL 100% FINAL INSPECTION FOR CONTINUITY AND SHORT CIRCUIT AS WELL AS EXISTENCE OF ALL CONTACTS
Elektrische 100% Endpruefung auf Durchgang und Kurzschluss. sowie das Vorhandensein aller Kontakte

212 12 REFERENCE POINTS A5.6.7.8 ARE ON OPPOSITE SITE OF A1.2.3.4
Bezugspunkte zu A5.6.7.8 auf gegenueberliegender Seite von A1.2.3.4

213 13 SOLDERING PROCESS: LEAD-FREE REFLOW SOLDERING IN REFERENCE TO JEDEC J-STD-020D
Loetprozess: Bleifreies Loeten in Anlehnung an JEDEC J-STD-020D

214 14 COLOURED IDENTIFICATION MARK FOR C-SAMPLES
Farbliche Markierung fuer C-Muster

215 15 -
-

216 16 CUT OUT WITH PLAIN STAMPING EDGES
Ausschnitt mit blanken Stanzkanten

217 17 POSITION OF HOUSING PN. REVISION AND MATERIAL MARKING MAY DIFFER FROM SERIES TO PRE-SERIES
Position der Gehause-PN. Materialkennzeichnung abweichend von Serie zu Voserie

218 18 FURTHER VARIANT SEE FAMILY DRAWING 2331612
Weitere Varianten siehe Familien Zeichnung 2331612

219 19 PINS OPTIONAL ALLOWED. BUT AT CPA-CONNECTOR WITHOUT ELECTRIC FUNCTION
Pins optional zulaessig. aber bei CPA-Stecker ohne elektrische Funktion

POSSIBLE PCB LAYOUT
CUSTOMER IS RESPONSIBLE FOR LAYOUT
Moegliches Leiterplattenlayout
Kunde ist fuer Leiterplattenlayout verantwortlich

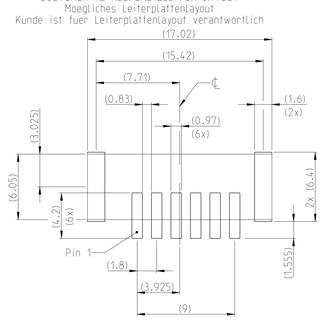

SERIES								
x- -1	x- -2	x- -3	x- -4	n/a	n/a	x- -9	PN: 2282154 - suitable Receptacle Housing w/o CPA	
x- -1	x- -2	n/a	n/a	n/a	n/a	n/a	PN: 2333104 - suitable Receptacle Housing w/ CPA	
2	2	2	2	2	2	2	Solder Brackets	-
6	6	6	6	6	6	6	NanoMQS Pin	-
-	-	-	-	-	-	1	6pos Header Assy	Z
-	-	-	-	-	1	-	6pos Header Assy	F
-	-	-	-	-	-	-	6pos Header Assy	E
-	-	-	-	-	-	-	6pos Header Assy	D
-	-	-	-	-	-	-	6pos Header Assy	C
-	1	-	-	-	-	-	6pos Header Assy	B
1	-	-	-	-	-	-	6pos Header Assy	A
							DESCRIPTION	COD.
A	A	A	A	A	A	A	Assy. Rev.	
0-x-1	0-x-2	~~0-x-3~~	~~0-x-4~~	~~0-x-5~~	~~0-x-6~~	~~0-x-9~~	TE PART NUMBER	
1.31	1.31	~~1.31~~	~~1.31~~	~~1.31~~	~~1.31~~	~~1.27~~	Theoretical weight (g)	

REV.	DESCRIPTION	COD.	REV.	MATERIAL	SURFACE/ COLOR	RAL (similar)	POS.
	Solder Brackets	-	A	Copper-Alloy	△1	-	3
	NanoMQS Pin	-	A	Copper-Alloy	△1	-	2
	6pos Header Assy	Z	A	PA4T-GF30	waterblue	5021	1
	6pos Header Assy	F	A	PA4T-GF30	brown	tbd	1
	6pos Header Assy	E	A	PA4T-GF30	green	tbd	1
	6pos Header Assy	D	A	PA4T-GF30	claret-violet	4004	1
	6pos Header Assy	C	A	PA4T-GF30	blue	5005	1
	6pos Header Assy	B	A	PA4T-GF30	nature	-	1
	6pos Header Assy	A	A	PA4T-GF30	black	9011	1

0-2314507-1 AS SHOWN
wie gezeichnet

100% Inspection
cmk >= 1.67
Gauge Inspection

THIS DRAWING IS A CONTROLLED DOCUMENT.
DIMENSIONS: mm
TOLERANCES UNLESS OTHERWISE SPECIFIED: 1 PLC ±0.5; 2 PLC ±0.05; 3 PLC ±0.005; ANGLES ±1°
MATERIAL -
FINISH -

DRN AJAY NAIK 03JAN2017
CHK Kareppa K 03JAN2017
APVD A. Burkhard 15JAN2017
PRODUCT SPEC 108-94871 (44)
APPLICATION SPEC -
WEIGHT SEE TABLE
CUSTOMER DRAWING

TE Connectivity
NAME 6pos NanoMQS 180 DEG SMD. Assembly
SIZE A0 | CAGE CODE 00779 | DRAWING NO C-2314507 | RESTRICTED TO -
SCALE 5:1 | SHEET 1 OF 1 | REV A4

printed on 7 Jul 2022 14:54, (Mirrored) from 1E220642
4806 (3/13)
Downloaded from Arrow.com.