MICRO SWITCH
FREEPORT ILLINOIS, U.S.A
A DIVISION OF HONEYWELL
FED. MFG. CODE 91929

SWITCH - BASIC

CATALOG LISTING
BZ-7R331
AGZ0831

BZ-7R331
PAGE 1 OF 1
DRAWING NUMBER
RELEASE NO. PR-13196
REPLACES
ISSUE 7

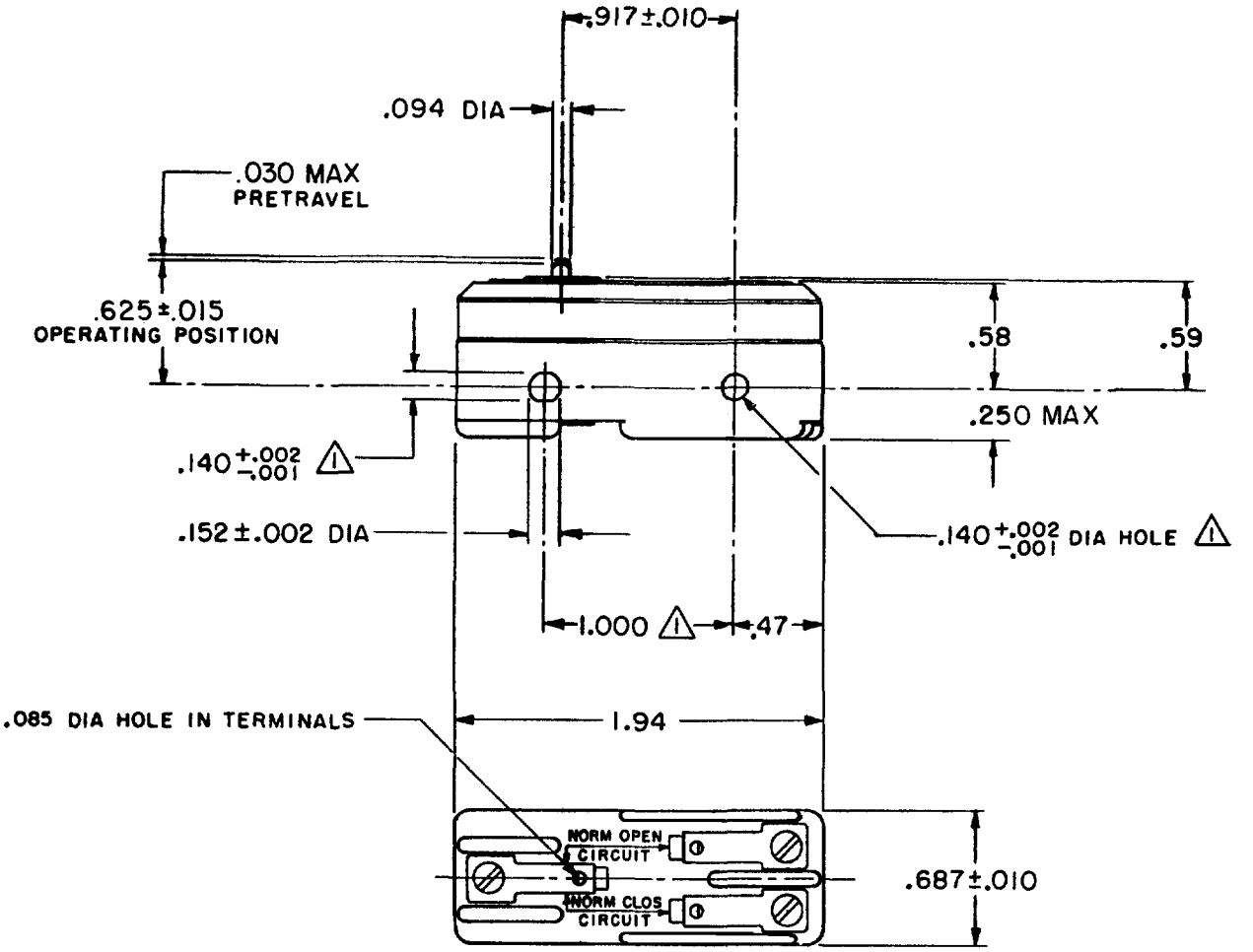

NOTE
⚠1 MOUNTING HOLES WILL ACCEPT PINS OR SCREWS OF .139 MAX DIA ON 1.000±.002 CENTERS

REVISIONS

A	CO 58037	SMA 1 OCT 85	17 FEB 06
B	OBS C075862	CSL 20 JUL 93	RJ
C	REINST PR22798	JAK 19 JUN 97	CHECK
D	C093346	DLT 1 SEP 98	84
E	CO-94212-C	DLT 15 SEP 99	JULY
F	0018448	DVM 17 FEB 06	12

CHECK KAG
CHECK 84
DRAWN GJW 12 JUL 84
FORMTEK

THIS DRAWING COVERS A PROPRIETARY ITEM AND IS THE PROPERTY OF MICRO SWITCH, A DIVISION OF HONEYWELL. THIS DRAWING IS NOT TO BE COPIED OR USED WITHOUT THE APPROVAL OF MICRO SWITCH.

THIRD ANGLE PROJECTION

CHARACTERISTICS

OPERATING FORCE -------- 22-28 OZ

RELEASE FORCE -------- 4 OZ MIN

DIFFERENTIAL TRAVEL---- .0025-.0050

OVERTRAVEL---------- .005 MIN

ELECTRICAL DATA

CONTACT ARRANGEMENT
S P D T

L74
15A 125,250,OR 480VAC 2A 600 VAC
1/8 HP 125 VAC, 1/4 HP 250 VAC
1/2A 125 VDC, 1/4A 250 VDC

L288
L315
L306
16A 250V ~ T85 5E4

SCALE FULL

DO NOT SCALE PRINT

TOLERANCES
APPLY TO DESIGN UNITS. CONVERSIONS ARE ONLY FOR REFERENCE. UNLESS NOTED, TOLERANCES ARE ±

	DIM. mm	TOL. mm/in	DIM. in	TOL. mm/in
NO PLACES	X	1/.04		
ONE PLACE	X.X	0.4/.016	X.X	0.8/.03
TWO PLACES	X.XX	0.15/.006	X.XX	0.38/.015
THREE PLACES			X.XXX	0.13/.005
ANGLES				

DESIGN UNITS SI METRIC ☐ US CUSTOMARY ■

WEIGHT .050 LB

Downloaded from Arrow.com.