THIS DRAWING IS UNPUBLISHED. RELEASED FOR PUBLICATION 20
© COPYRIGHT 20 BY - ALL RIGHTS RESERVED.

REVISIONS

P	LTR	DESCRIPTION	DATE	DWN	APVD
	A	INITIAL	04JUN2015	DW	CW
	A1	ECR-16-004419	28MAR2016	DW	CW
	B	ECR-20-014876	18NOV2020	WQR	CW

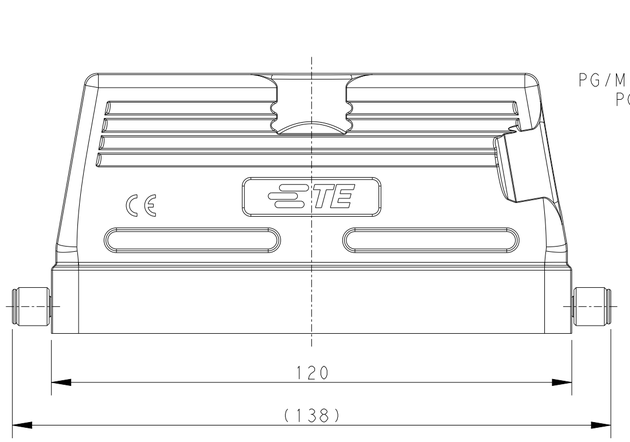

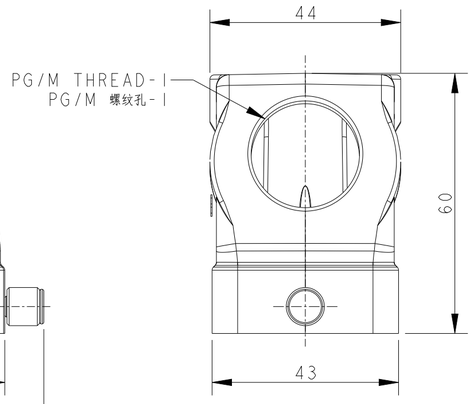

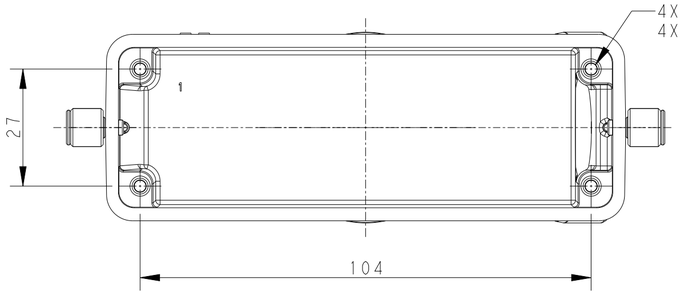

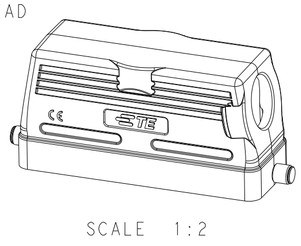

TYPE 1: LOW CONSTRUCTION, SIDE ENTRY
类型1： 低结构， 侧出

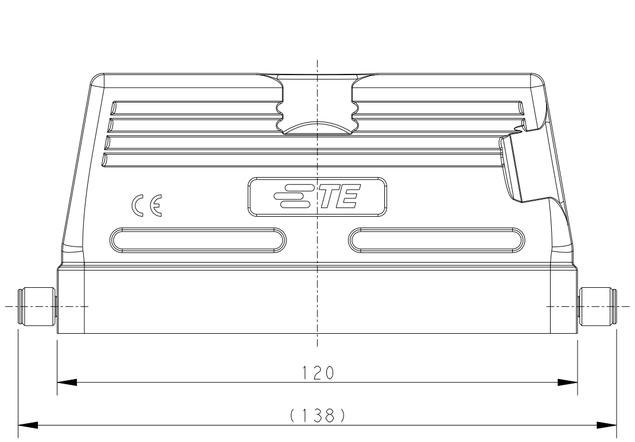

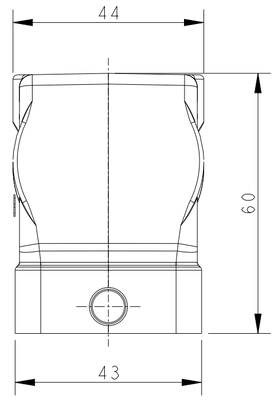

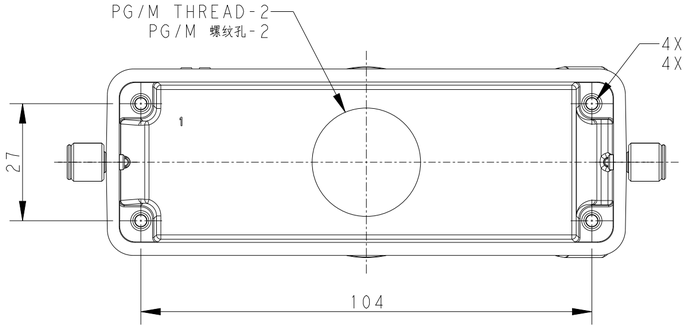

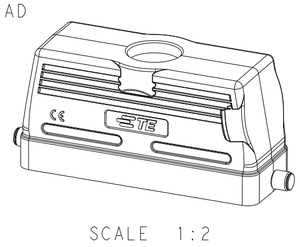

TYPE 2: LOW CONSTRUCTION, TOP ENTRY
类型2： 低结构， 高出

NOTES:
1. TECHNICAL CHARACTERISTICS:
HOOD MATERIAL: DIE CAST ALUMINIUM ALLOY
SURFACE: POWDER COATED, GREY
DEGREE OF PROTECTION: IP65 (MATED)

注释：
1. 技术参数：
上壳材料： 铝合金
表面处理： 灰色粉末喷涂
防护等级： IP65(配合)

THIS DRAWING IS A CONTROLLED DOCUMENT.

DIMENSIONS: mm

TOLERANCES UNLESS OTHERWISE SPECIFIED:
0 PLC ±-
1 PLC ±-
2 PLC ±-
3 PLC ±-
4 PLC ±-
ANGLES ±-

MATERIAL -
-

FINISH -
-

DWN DAVID WANG 04JUN2015
CHK CHRIS WANG 04JUN2015
APVD XIANG XU 04JUN2015
PRODUCT SPEC 108-137013
APPLICATION SPEC 114-137013
WEIGHT -

TE Connectivity

NAME H24B-TS/TG/TSH/TGH-RO-M/PG

SIZE	CAGE CODE	DRAWING NO	RESTRICTED TO
A2	00779	C-T13X02401XX000	-

CUSTOMER DRAWING | SCALE 1:2 | SHEET 1 OF 3 | REV B

Downloaded from Arrow.com.

THIS DRAWING IS UNPUBLISHED. RELEASED FOR PUBLICATION 20
© COPYRIGHT 20 BY - ALL RIGHTS RESERVED.

REVISIONS

P	LTR	DESCRIPTION	DATE	DWN	APVD
	-	SEE SHEET 1	-	-	-

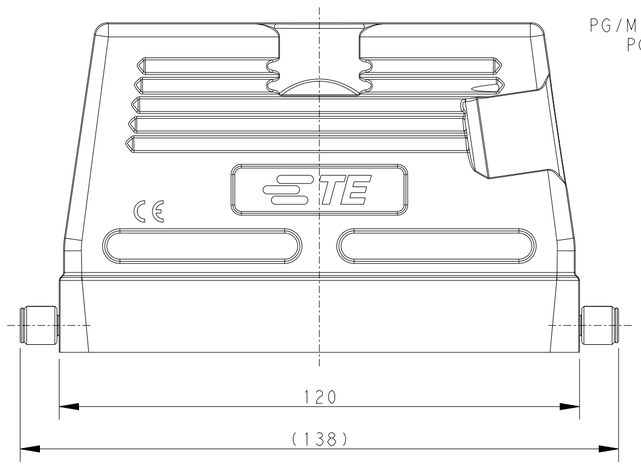

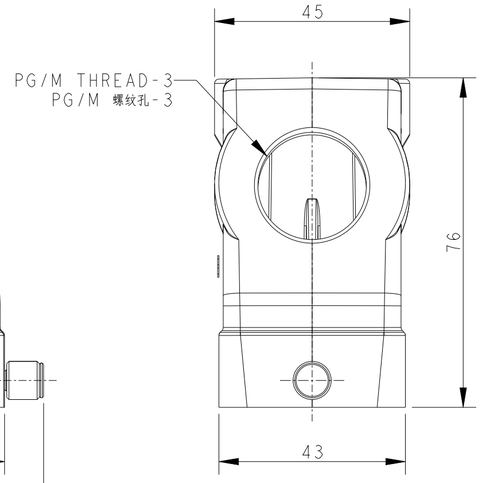

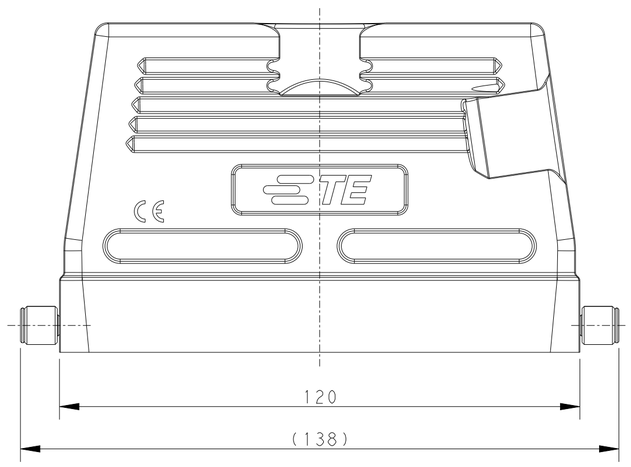

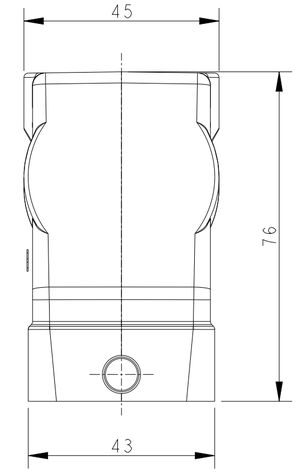

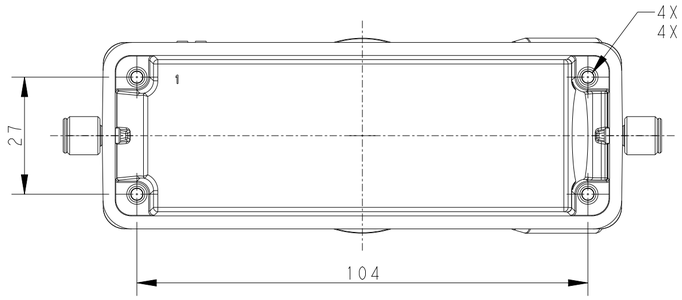

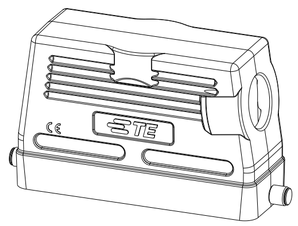

TYPE 3: HIGH CONSTRUCTION, SIDE ENTRY
类型3： 高结构， 侧出

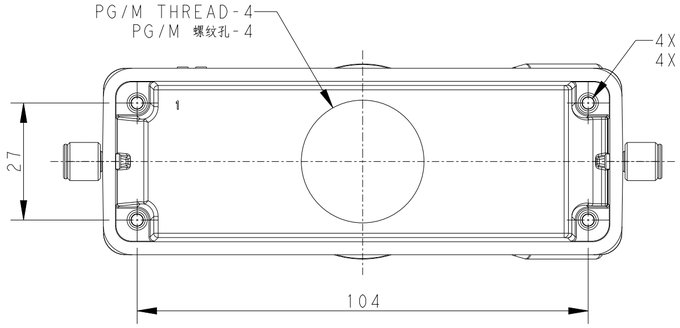

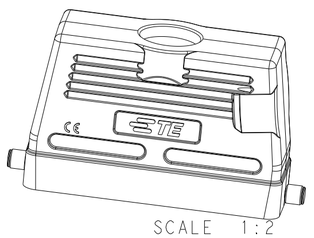

TYPE 4: HIGH CONSTRUCTION, TOP ENTRY
类型4： 高结构， 顶出

NOTES:

SEE SHEET 1

THIS DRAWING IS A CONTROLLED DOCUMENT.		DWN DAVID WANG 04JUN2015	TE Connectivity
DIMENSIONS: mm	TOLERANCES UNLESS OTHERWISE SPECIFIED: 0 PLC ±- 1 PLC ±- 2 PLC ±- 3 PLC ±- 4 PLC ±- ANGLES ±-	CHK CHRIS WANG 04JUN2015	NAME H24B-TS/TG/TSH/TGH-RO-M/PG
		APVD XIANG XU 04JUN2015	
		PRODUCT SPEC 108-137013	
		APPLICATION SPEC 114-137013	SIZE A2 / CAGE CODE 00779 / DRAWING NO C-T13X02401XX000 / RESTRICTED TO -
MATERIAL - -	FINISH - -	WEIGHT -	CUSTOMER DRAWING / SCALE 1:1 / SHEET 2 OF 3 / REV B

Downloaded from Arrow.com.

THIS DRAWING IS UNPUBLISHED. RELEASED FOR PUBLICATION 20
© COPYRIGHT 20 BY - ALL RIGHTS RESERVED.

REVISIONS					
P	LTR	DESCRIPTION	DATE	DWN	APVD
	-	SEE SHEET 1	-	-	-

NOTES:

SEE SHEET 1

PART NUMBER 零 件 料 号	PART DESCRIPTION 零 件 描 述	PG/M THREAD-1 PG/M 螺纹孔-1	PG/M THREAD-2 PG/M 螺纹孔-2	PG/M THREAD-3 PG/M 螺纹孔-3	PG/M THREAD-4 PG/M 螺纹孔-4	TYPE 类型
TI340240121-000	H24B-TGH-RO-PG21 H24B HOOD,TOP ENTRY PG21,2 EAR,HIGH CONSTRUCTION,POWDER COATED,GREY H24B上壳，顶出PG21，2耳，高结构，灰色粉末喷涂	-	-	-	PG21	TYPE 4 类型 4
TI340240125-000	H24B-TGH-RO-M25 H24B HOOD,TOP ENTRY M25,2 EAR,HIGH CONSTRUCTION,POWDER COATED,GREY H24B上壳，顶出M25，2耳，高结构，灰色粉末喷涂	-	-	-	M25	
TI340240129-000	H24B-TGH-RO-PG29 H24B HOOD,TOP ENTRY PG29,2 EAR,HIGH CONSTRUCTION,POWDER COATED,GREY H24B上壳，顶出PG29，2耳，高结构，灰色粉末喷涂	-	-	-	PG29	
TI340240132-000	H24B-TGH-RO-M32 H24B HOOD,TOP ENTRY M32,2 EAR,HIGH CONSTRUCTION,POWDER COATED,GREY H24B上壳，顶出M32，2耳，高结构，灰色粉末喷涂	-	-	-	M32	
TI340240140-000	H24B-TGH-RO-M40 H24B HOOD,TOP ENTRY M40,2 EAR,HIGH CONSTRUCTION,POWDER COATED,GREY H24B上壳，顶出M40，2耳，高结构，灰色粉末喷涂	-	-	-	M40	
TI330240121-000	H24B-TSH-RO-PG21 H24B HOOD,SIDE ENTRY PG21,2 EAR,HIGH CONSTRUCTION,POWDER COATED,GREY H24B上壳，侧出PG21，2耳，高结构，灰色粉末喷涂	-	-	PG21	-	TYPE 3 类型 3
TI330240125-000	H24B-TSH-RO-M25 H24B HOOD,SIDE ENTRY M25,2 EAR,HIGH CONSTRUCTION,POWDER COATED,GREY H24B上壳，侧出M25，2耳，高结构，灰色粉末喷涂	-	-	M25	-	
TI330240129-000	H24B-TSH-RO-PG29 H24B HOOD,SIDE ENTRY PG29,2 EAR,HIGH CONSTRUCTION,POWDER COATED,GREY H24B上壳，侧出PG21，2耳，高结构，灰色粉末喷涂	-	-	PG29	-	
TI330240132-000	H24B-TSH-RO-M32 H24B HOOD,SIDE ENTRY M32,2 EAR,HIGH CONSTRUCTION,POWDER COATED,GREY H24B上壳，侧出M32，2耳，高结构，灰色粉末喷涂	-	-	M32	-	
TI330240140-000	H24B-TSH-RO-M40 H24B HOOD,SIDE ENTRY M40,2 EAR,HIGH CONSTRUCTION,POWDER COATED,GREY H24B上壳，侧出M40，2耳，高结构，灰色粉末喷涂	-	-	M40	-	
TI320240121-000	H24B-TG-RO-PG21 H24B HOOD,TOP ENTRY PG21,2 EAR,POWDER COATED,GREY H24B上壳，顶出PG21，2耳，灰色粉末喷涂	-	PG21	-	-	TYPE 2 类型 2
TI320240125-000	H24B-TG-RO-M25 H24B HOOD,TOP ENTRY M25,2 EAR,POWDER COATED,GREY H24B上壳，顶出M25，2耳，灰色粉末喷涂	-	M25	-	-	
TI320240129-000	H24B-TG-RO-PG29 H24B HOOD,TOP ENTRY PG29,2 EAR,POWDER COATED,GREY H24B上壳，顶出PG29，2耳，灰色粉末喷涂	-	PG29	-	-	
TI320240132-000	H24B-TG-RO-M32 H24B HOOD,TOP ENTRY M32,2 EAR,POWDER COATED,GREY H24B上壳，顶出M32，2耳，灰色粉末喷涂	-	M32	-	-	
TI310240121-000	H24B-TS-RO-PG21 H24B HOOD,SIDE ENTRY PG21,2 EAR,POWDER COATED,GREY H24B上壳，侧出PG21，2耳，灰色粉末喷涂	PG21	-	-	-	TYPE 1 类型 1
TI310240125-000	H24B-TS-RO-M25 H24B HOOD,SIDE ENTRY M25,2 EAR,POWDER COATED,GREY H24B上壳，侧出M25，2耳，灰色粉末喷涂	M25	-	-	-	
TI310240132-000	H24B-TS-RO-M32 H24B HOOD,SIDE ENTRY M32,2 EAR,POWDER COATED,GREY H24B上壳，侧出M32，2耳，灰色粉末喷涂	M32	-	-	-	

THIS DRAWING IS A CONTROLLED DOCUMENT.

DIMENSIONS: mm

TOLERANCES UNLESS OTHERWISE SPECIFIED:
0 PLC ±-
1 PLC ±-
2 PLC ±-
3 PLC ±-
4 PLC ±-
ANGLES ±-

MATERIAL -
-

FINISH -
-

DWN DAVID WANG 04JUN2015
CHK CHRIS WANG 04JUN2015
APVD XIANG XU 04JUN2015
PRODUCT SPEC 108-137013
APPLICATION SPEC 114-137013
WEIGHT -

TE Connectivity

NAME H24B-TS/TG/TSH/TGH-RO-M/PG

SIZE	CAGE CODE	DRAWING NO	RESTRICTED TO
A2	00779	C-T13X02401XX000	-

Customer Drawing | SCALE 1:1 | SHEET 3 OF 3 | REV B

1471-9 (3/13)

Downloaded from Arrow.com.