SYMBOL DEFINITION		MISSING SYMBOLS
A DIMENSION WITHOUT AN INSPECTION REPORT SYMBOL (◇) DOES NOT REQUIRE INSPECTION. IT MAY BE CONTROLLED ON THE INDIVIDUAL COMPONENT DRAWING.	TOTAL NO OF INSPECTIONS REQUIRED: 70	NO MISSING SYMBOL NUMBER
	LAST NO. USED: 44	

REVISION HISTORY																			
DWG STATUS																			
SYS	STG	REV	PLT	CAD	ZONE														
DRAWING	R	01	-	-		WAS PE33484,REVISED AND RELEASED													

CODINGS

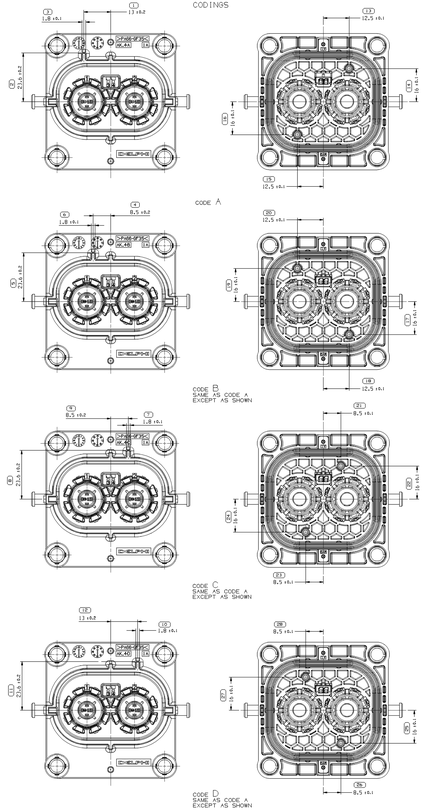

CODING A REPRESENTED

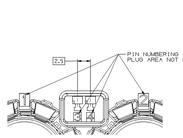

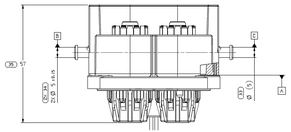

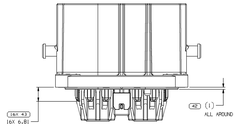

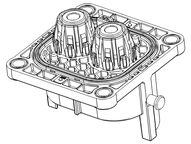

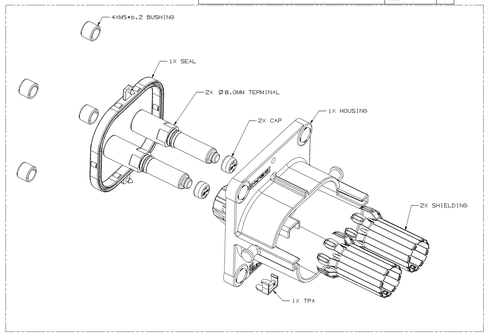

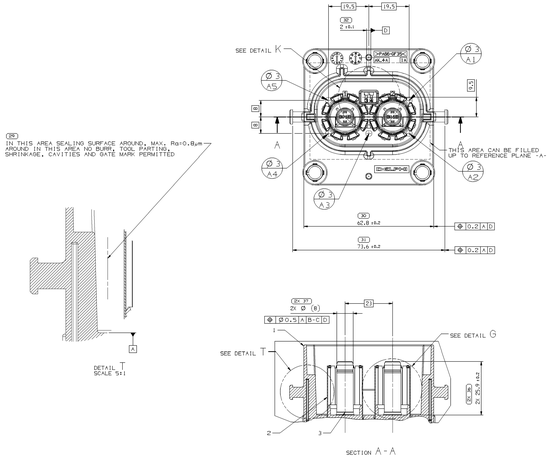

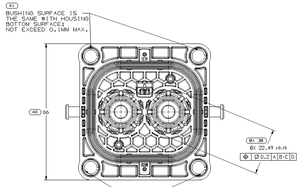

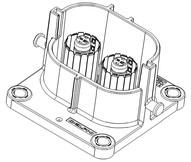

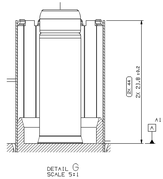

NOTES:

1. UNLESS OTHERWISE SPECIFIED AND/OR INDICATED:
   DIMENSIONS ARE TO FACE OF VIEW SHOWN AND
   ARE TO BE INSPECTED PER DELPHI 3D MODEL INSPECTION
   USED WITH MODEL FOR THE USE DIMENSIONS. FOR ALL
   OTHER DIMENSIONS NOT SHOWN BUT REQUIRED FOR TOOL
   BUILD, SEE MATH MODEL FOR PRECISE TOOL PATH DATA.
   UNDEFINED DRAFT ANGLE SHOULD BE IN DIMENSION TOLERANCE
   LOCK FIXTURE ARE IDENTICAL

2. APPEARANCE:
   CONNECTOR PIN HEADER SHOULD HAVE PART NUMBER,
   PRODUCTION DATE AND CAVITIED NUMBER.
   PLASTIC PARTS SHOULD BE FREE OF BURRS, SMOOTH, NO HOLES,
   CRACKS, SWIRLS, DEFORMATIONS AND SCRATCHES ETC FAILURES.
   SMOOTH SURFACE ON METAL PARTS NO BURRS, NO RUST AND
   CRIMPLE AND FLAKE FAILURE.
   MAX.BURR 0.1MM ALLOWED EXCEPT IN SEALING AREA.
   UNLESS OTHERWISE SPECIFIED IN THE DIMENSIONAL REQUIREMENT.

3. HOUSING MATERIAL:PA66+GF35 ORG,SIMILAR TO RAL 2003;
   COATING IS NOT PERMITTED ON THE HOUSING.
   REPAINT IS NOT PERMITTED ON THIS PIN HEADER.

   SHIELDING MATERIAL:CU-ALLOY1,PLATING:Ni 1.3-4µm(typ)2-4µm OVERALL.
   TERMINAL MATERIAL:CU-ALLOY1 PLATING:Ni 1.3-4µm PORE TIGHT(typ)2-5µm OVERALL.
   BUSHING MATERIAL:HIGH CARBON STEEL,PLATING: MIN. 8µm ZNNI.

   SEAL MATERIAL: LSR NATURAL;

4. THIS PART ACCEPTS THE FOLLOWING COMPONENTS OR EQUIVALENT:
   HYILI N1059BLJ01 OR NUDONBLJ01

5. MATING CONNECTOR:33357B1,33357B2,33357B3 & 33357B4.

6. LEAKAGE SPEC OF HEADER SEAL: IP6K9K,IP67;

7. BUSHING RETENTION FORCE IS 40N MIN.
   SHIELDING RETENTION FORCE WHOLEY IS 30N MIN.
   SEAL RETENTION FORCE IS 30N MIN.
   TERMINAL SCREW TORQUE IS 1.5Nm MIN.
   CAP RETENTION FORCE IS 70N MIN.

AK 2W CLASS 4 PIN HEADER

33351457	CODE D	01	33351462	CODE D				33351467	CODE D	CLARE VIOLET							
33351456	CODE C	01	33351461	CODE C				33351466	CODE C	BLUE							
33351455	CODE B	01	33351460	CODE B	33351475			33351465	CODE B	WHITE	33351479	33351468	33351469	33351472			
33351454	CODE A	01	33351459	CODE A				33351464	CODE A	BLACK							
ASM PART NO	ASM CODING	REV	HOUSING	HOUSING CODE	TERMINAL	CAP PN	CAP CODE	CAP COLOR	SHIELDING	SEAL	TPA	BUSHING					

DELPHI	
DELPHI PACKARD ELECTRICAL/ELECTRONIC ARCHITECTURE	
DELPHI	
PART NUMBER	33351453
DRAWING NUMBER	33351453
SIZE	A1x4
SCALE	2:1
SHEET	2 OF 2
FORM	1 OF 1
REV	R
SYS	01
STG	-

THIS DRAWING IS THE PROPERTY OF DELPHI CORPORATION AND SHALL NOT BE REPRODUCED OR COPIED IN WHOLE OR IN PART WITHOUT WRITTEN PERMISSION.
COPYRIGHT 2014 DELPHI TECHNOLOGIES INC. ALL RIGHTS RESERVED.

PART DRAWING

41.978

UNLESS OTHERWISE SPECIFIED
THIS DRAWING IS A DIGITAL DATA FORMAT
ALL DIMENSIONS ARE IN MILLIMETERS

APVD	WEINZIERL MA
APVD	WEINZIERL MA
APVD	MELOUD JIADE
APVD	
APVD	

SUBSTANCE OF STANDARD HAS REVOLED
CONTROL PER DELPHI (DRAFTED)

PART COMPT

TAXI ASM MOUN HOUSING

33351453

A

THIRD ANGLE PROJECTION

DO NOT SCALE

USE DATA

33351453