THIS DRAWING AND THE SUBJECT MATTER SHOWN THEREON ARE CONFIDENTIAL AND THE PROPERTY OF BEL/STEWART/TRP CONNECTOR AND SHALL NOT BE REPRODUCED, COPIED, OR USED IN ANY MANNER WITHOUT THE WRITTEN CONSENT OF TRP CONNECTOR.

PRODUCT MAY BE PROTECTED BY ONE OR MORE OF THE FOLLOWING US PATENTS:
5736910 5939955 6425781 6428361 6554638 6840817 7123117
7429195 7717749 7808751 6217391 6149050 7924130

REVISIONS

P	LTR	DESCRIPTION	DATE	DWN	APVD
	2	SEE LAST SHEET	14JAN2015	RL	TY

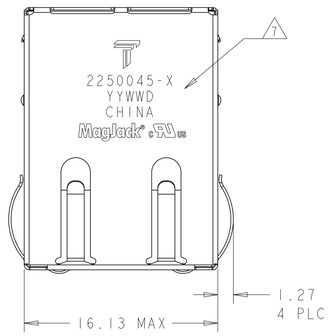

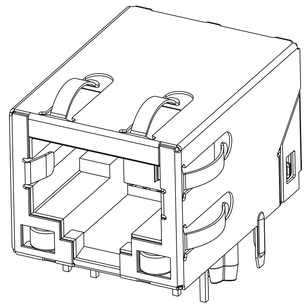

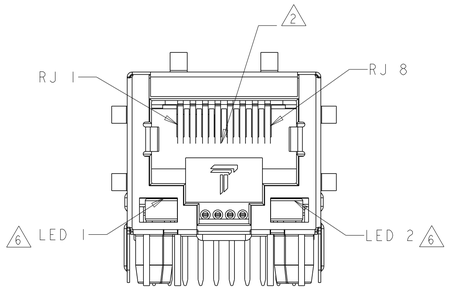

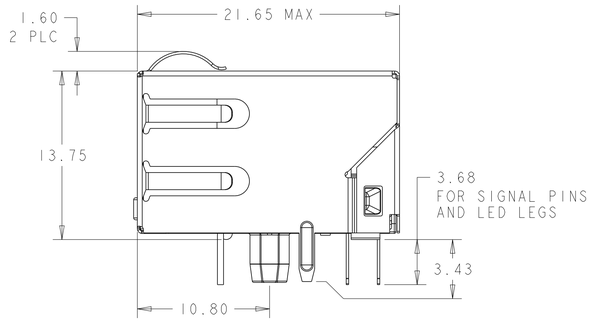

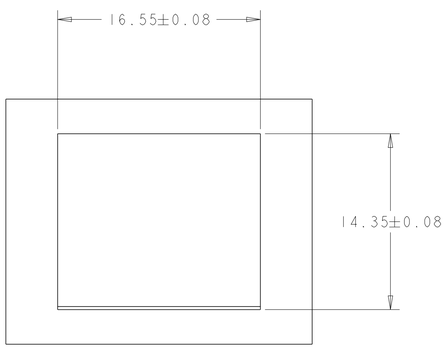

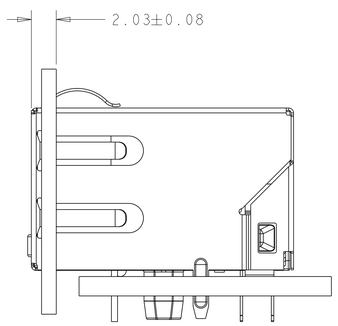

SUGGESTED PANEL OPENING

1. MATERIALS
   - HOUSING: THERMOPLASTIC, FLAMMABILITY RATING UL 94V-0.
   - SHIELD: BRASS 0.20mm THICK, PREPLATED WITH 0.76um MIN SEMI-BRIGHT NICKEL. SOLDER TABS POST DIPPED WITH 2.54um MIN SAC SOLDER.
   - CONTACTS: PHOSPHOR BRONZE 0.46mm X 0.30mm, PHOSPHOR BRONZE, 1.27um MIN NICKEL UNDERPLATE, WITH 1.27um MIN GOLD PLATING AT MATING INTERFACE AND 2.54um MIN MATTE TIN ON SOLDER TAILS,
   - SOLDER TAILS: 0.25mmTHICK, PHOSPHOR BRONZE, 1.27um MIN OVERALL NICKEL UNDERPLATE, 3um TIN PLATE
   - LIGHT EMITTING DIODE (LED): DIFFUSED EPOXY LENS, 0.5mm X 0.5mm CARBON STEEL WIREFRAME LEADS PREPLATED WITH 2.03um MIN. SILVER PLATE OVER 1.02um MIN. NICKEL OVER 1.02um MIN. COPPER UNDERPLATE; LEADS POST-PLATED WITH 3.05um MIN. MATTE TIN AND/OR SAC SOLDER DIP OR PURE TIN SOLDER DIP

2. RJ45 JACK CAVITY CONFORMS TO FCC RULES AND REGULATIONS PART 68 SUB PART F.

3. MAGNETICS
   - APPLICATION: 10/100 BASE-T, EXTENDED TEMPERATURE
   - IMPEDANCE: 100 OHMS
   - TURNS RATIO (CHIP:CABLE): TX = 1:1, RX = 1:1
   - OPEN CIRCUIT INDUCTANCE (OCL): 350uH MIN @100kHz, 0.1VRMS, 8mADC BIAS FROM -40°C TO +85°C, TX AND RX
   - PERFORMANCE @ 25°C:
     INSERTION LOSS (IL): 1.1dB MAX FROM 0.5MHz TO 100MHz
     RETURN LOSS (RL): 18dB MIN FROM 0.5MHz TO 30MHz
     18-20LOG(f/30)dB MIN FROM 30.1MHz TO 60MHz
     12dB MIN FROM 60.1MHz TO 80MHz
     CROSSTALK ATTENUATION: 35dB MIN FROM 0.5MHz TO 40MHz
     33-20LOG(f/50)dB MIN FROM 40.1MHz TO 100MHz
     COMMON MODE REJECTION RATIO (CMRR): 30dB MIN FROM 0.5MHz TO 100MHz
   - ISOLATION VOLTAGE: 2250VDC FOR 60 SECONDS WITH A RISE TIME OF 500 V/SEC

4. OPERATING TEMPERATURE: FROM -40°C TO +85°C.

5. INDICATED MAGNETIC CONNECTIONS ARE SYMMETRICAL TO SUPPORT AUTO-MDI/MDIX.

6. LEDS WITH BUIL-IN 250 OHM RESISTORS. LEDS ARE DRIVEN WITH 5V VOLTAGE AND THE MAX OPERATING CURRENT IS 20mA
   LED COLOR: DOMINATE WAVELENGTH (λD): GREEN 568 nm TYP. @ VF=5V
   FORWARD CURRENT (IF): GREEN 12mA TYP @ VF = 5V
   DOMINATE WAVELENGTH (λD): YELLOW 588 nm TYP. @ VF=5V
   FORWARD CURRENT (IF): YELLOW 13mA TYP @ VF = 5V

7. TRP CONNECTOR LOGO, PART NUMBER, DATE CODE, COUNTRY OF ORIGIN AND AGENCY APPROVAL MARKING IN APPROXIMATE LOCATION SHOWN.

8. THESE PARTS ARE RECOMMENDED FOR WAVE SOLDERING PROCESS,PREHEAT TEMPERATURE IS 120°C TO 160°C, 120 SECONDS TO 180 SECONDS, PEAK WAVE SOLDERING TEMPERATURE IS 260°C MAX,10 SECONDS MAX.

GREEN	YELLOW	2250045-1
9 ⊣▷⊢ 10	11 ⊣▷⊢ 12	PART NUMBER
LED 1	LED 2	

THIS DRAWING IS A CONTROLLED DOCUMENT.

DIMENSIONS: mm

TOLERANCES UNLESS OTHERWISE SPECIFIED:
0 PLC ±0.25
1 PLC ±0.25
2 PLC ±0.25
3 PLC ±-
4 PLC ±-
ANGLES ±-

PRODUCT SPEC: 108-104004
APPLICATION SPEC: -

DWN 05JUN2013 ROY LIU
CHK 05JUN2013 TOWER YU/FRANK LIU
APVD 05JUN2013 TONY YUAN

trp CONNECTOR a bel group — DONGGUAN CHINA

MODEL NAME: MAGJACK SINGLE Non-PoE

DESC: 1X1 4146ET 10/100 TAB DOWN W/ LED

SIZE A1 | CAGE CODE | DRAWING NO C=2250045 | RESTRICTED TO -

CUSTOMER DRAWING | SCALE 4:1 | SHEET 1 OF 3 | REV 2

Downloaded from Arrow.com.
Please read our datasheet & drawing disclaimer here.

© COPYRIGHT TRP connector ALL RIGHTS RESERVED

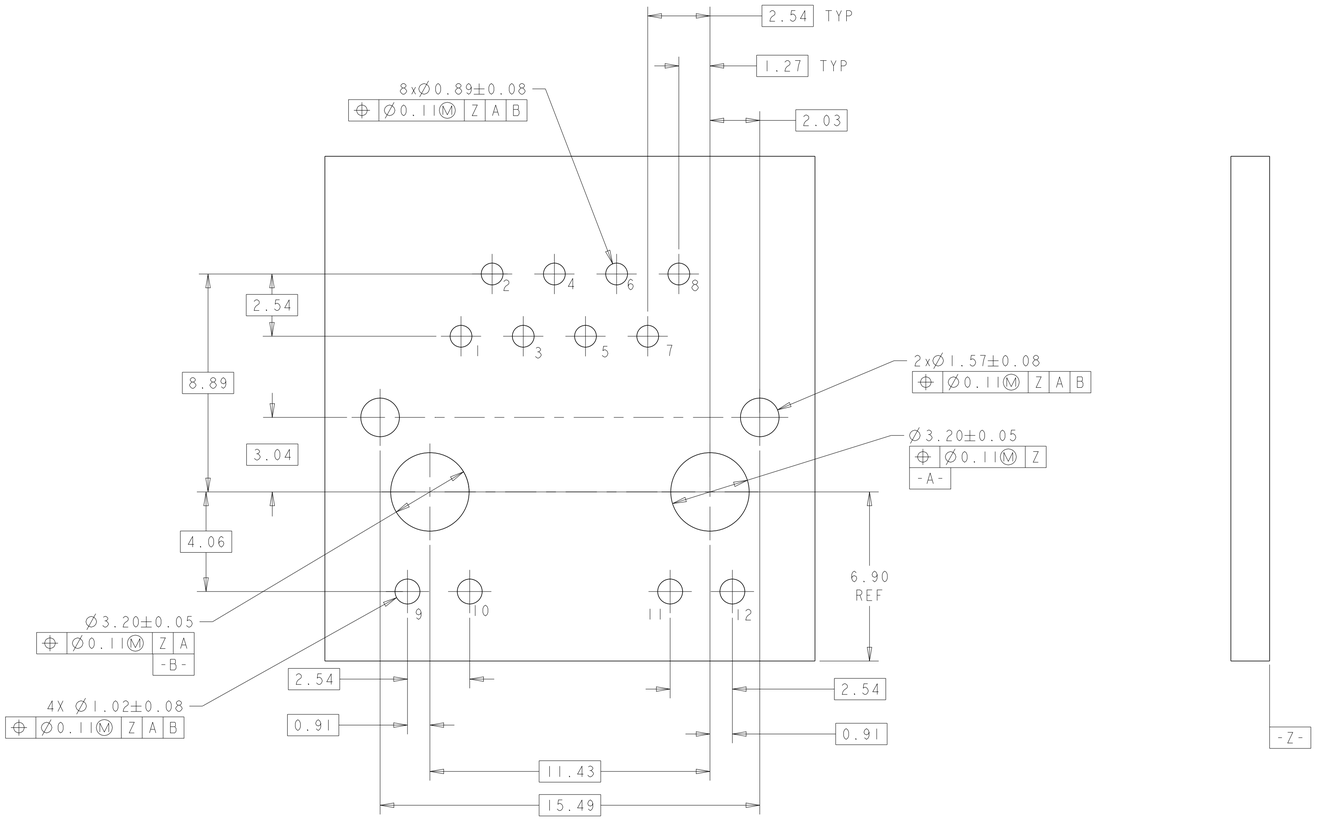

SUGGESTED PCB LAYOUT
COMPONENT SIDE

4146ET 10/100 BASE-T CIRCUIT 3 5

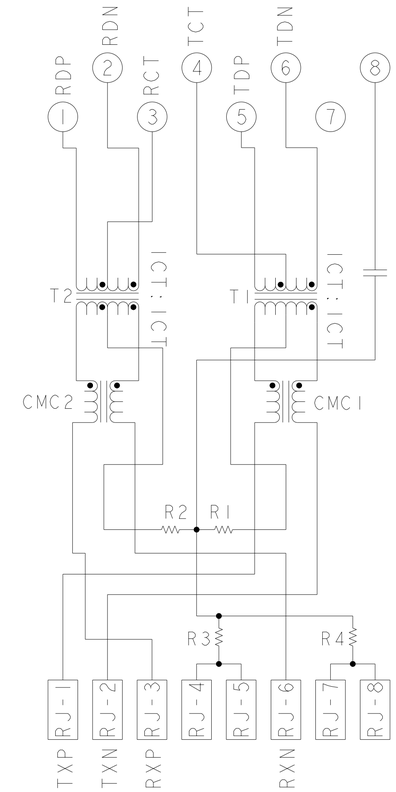

C1 = 1000 pF, 2kV CAPACITOR.

R1-R4 = 75 OHMS, RESISTORS.

THIS DRAWING IS A CONTROLLED DOCUMENT.	DWN ROY LIU 05JUN2013	trp CONNECTOR a bel group	DONGGUAN CHINA
DIMENSIONS: mm	CHK TOWER YU/FRANK LIU 05JUN2013		
TOLERANCES UNLESS OTHERWISE SPECIFIED: 0 PLC ±0.25, 1 PLC ±0.25, 2 PLC ±0.25, 3 PLC ±-, 4 PLC ±-, ANGLES ±-	APVD TONY YUAN 05JUN2013	DESC IXI 4146ET 10/100 TAB DOWN W/ LED	
	MODEL NAME MAGJACK SINGLE Non-PoE	SIZE A1 / CAGE CODE / DRAWING NO C-2250045	RESTRICTED TO -
PRODUCT SPEC 108-104004	APPLICATION SPEC -		
	CUSTOMER DRAWING	SCALE 4:1 / SHEET 2 OF 3	REV 2

Downloaded from Arrow.com.

© COPYRIGHT TRP connector ALL RIGHTS RESERVED

C_2250045

REVISION HISTORY

DATE	REV	CHANGES	REASON	APPROVAL
05JUN2013	1	-	INITIAL RELEASE	TONY YUAN
14JAN2015	2	EC-1411035 COMPANY LOGO CHANGE	MARKET REQUIREMENT	TONY YUAN

STOCK DISPOSITION

A: CONTINUE AS IS
B: REWORK
C: SCRAP
D: USE OLD FIRST
E: PARTS TO CONFORM
F: OTHER

INVENTORY (A,B,C,D,E,F)	WORK IN PROCESS (A,B,C,F)	SUPPLIER ORDERS (A,E,F)	OPEN CUST ORDERS (A,E,F)
-	-	-	-
-	-	-	-

THIS DRAWING IS A CONTROLLED DOCUMENT.

DIMENSIONS: mm

TOLERANCES UNLESS OTHERWISE SPECIFIED:
0 PLC ±0.25
1 PLC ±0.25
2 PLC ±0.25
3 PLC ±-
4 PLC ±-
ANGLES ±-

PRODUCT SPEC: 108-104004

APPLICATION SPEC: -

DWN ROY LIU 05JUN2013
CHK TOMER YU/FRANK LIU 05JUN2013
APVD TONY YUAN 05JUN2013

trp CONNECTOR a bel group — DONGGUAN CHINA

MODEL NAME: MAGJACK SINGLE Non-PoE

DESC: 1X1 4146ET 10/100 TAB DOWN W/ LED

SIZE: A1 | CAGE CODE: | DRAWING NO: C-2250045 | RESTRICTED TO: -

CUSTOMER DRAWING | SCALE 4:1 | SHEET 3 OF 3 | REV 2

xxxxx

Downloaded from Arrow.com.