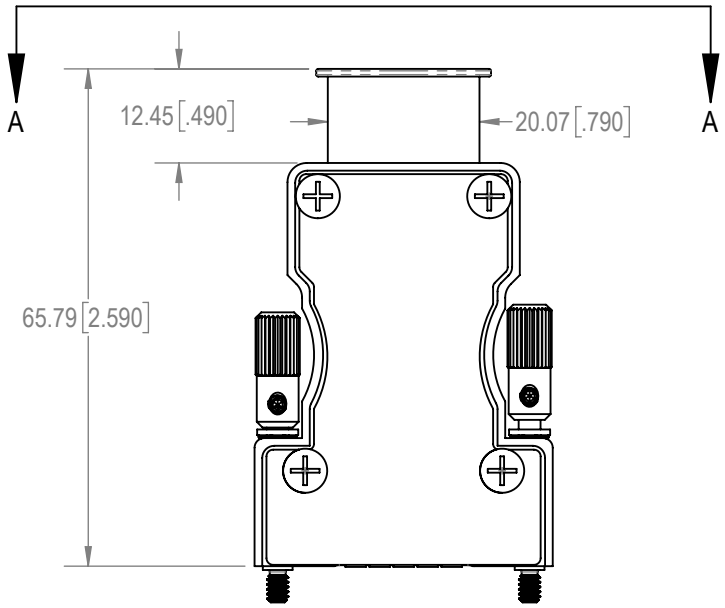

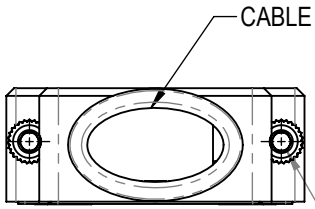

AUXILIARY A-A

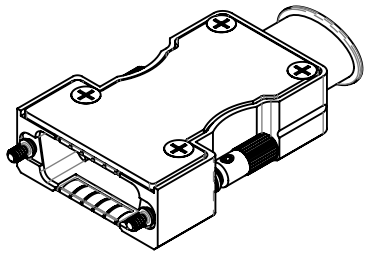

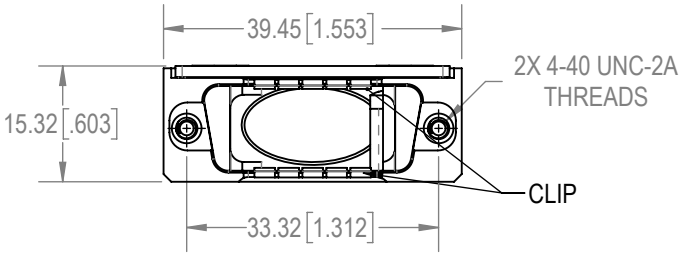

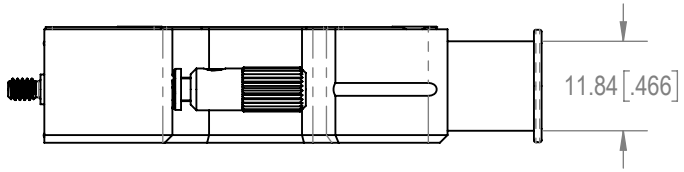

NOTES:

1. MATERIALS AND FINISHES:
   BACKSHELL AND BACKSHELL COVER: PRECISION-MACHINED ALUMINUM, ELECTROLESS NICKEL PLATE.
   BACKSHELL COVER GASKET: SILICONE NICKEL GRAPHITE.
   JACKSCREWS,WASHERS AND WAVE WASHERS: STAINLESS STEEL, PASSIVATED.
   EMI CLIP: BERYLLIUM COPPER.
   KNOBS, SET SCREWS, BACKSHELL COVER SCREWS, GROUNDING SCREWS: STAINLESS STEEL, PASSIVATED.
2. DETAILED PRODUCT, ELECTRICAL AND MECHANICAL INFORMATION IS AVAILABLE IN THE LATEST STANDARD DENSITY MACH-D PRODUCT PUBLICATION AT CONNECTPOSITRONIC.COM.
3. COMPONANTS ARE COMPLIANT TO CURRENT RoHS DIRECTIVES.

BY: ND	CHK: AB	3RD ANGLE	POSITRONIC BELIEVES THE DATA ON THE DRAWING TO BE RELIABLE. THE USER EMPLOYS SUCH INFORMATION AT HIS OWN DISCRETION AND RISK. POSITRONIC ASSUMES NO RESPONSIBILITY FOR RESULTS OBTAINED OR DAMAGES INCURRED FROM USE OF SUCH INFORMATION IN WHOLE OR IN PART.
APR: PA	RELEASED DATE: 2022-03-15	SCALE: NTS	Positronic® CONNECTPOSITRONIC.COM
TOLERANCES: ±0.03mm [.001 INCHES]FOR MALE CONTACT MATING DIAMETERS ±0.08mm [.003 INCHES]FOR CONTACT TERMINATION DIAMETERS ±0.13mm [.005 INCHES]FOR ALL OTHER DIAMETERS ±0.38mm [.015 INCHES]FOR ALL OTHER DIMENSIONS ±5° FOR ALL ANGLES DIMENSION ARE IN MILLIMETERS [INCHES]		PART NUMBER: MCD15000ENE50/AA	SERIES: MCD
		TITLE: MCD15000ENE50/AA	
		CREATED ON: 2022-03-03	SHEET: SHEET 1 OF 1 — REV: A

Downloaded from Arrow.com.