PART NUMBER	SML-LX0606SISUGCTR	REV	E

REV	E.C.N. NUMBER AND REVISION COMMENTS	DATE
A	E.C.N. #11148	05.29.07
B	E.C.N. #11508	03.05.09
C	E.C.N. #11581	12.21.09
D	E.C.N. #11964	07.02.15
E	ECN-Lumex201700010	04.10.17

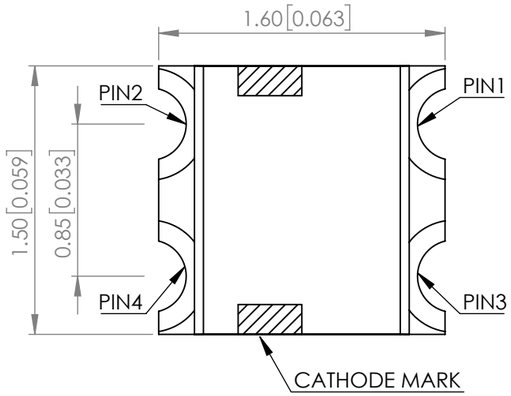

POLARITY

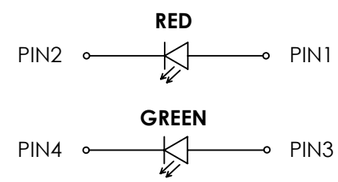

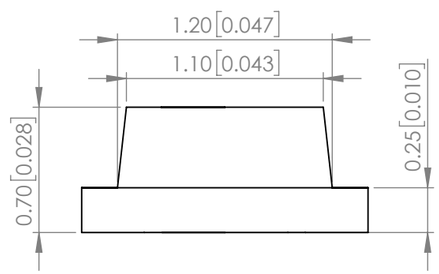

RECOMMENDED SOLDER PAD LAYOUT

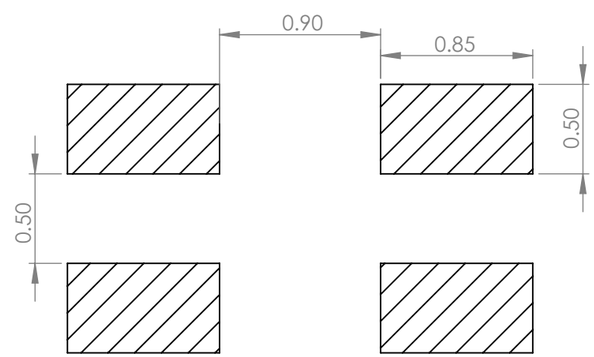

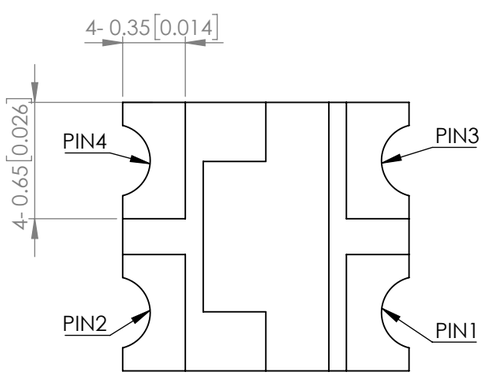

ELECTRO-OPTICAL CHARACTERISTIC TA=25℃

PARAMETER		MIN	TYP	MAX	UNITS	TEST COND
PEAK WAELENGHT	R	-	645	-	nm	If=20mA
	G	-	575	-		
FORWARD VOLTAGE	R	-	1.9	2.5	Vf	If=20mA
	G	-	2	2.5		
REVERSE VOLTAGE (R/G)		-	-	5	Vr	IR=10uA
LUMINOUS INTENSITY	R	40	-	80	mcd	If=20mA
	G	20	-	55		
VIEWING ANGLE		-	120	-	2x theta1/2	If=20mA
EMITTED COLOR		R/G				
EPOXY LENS FINISH		WATER CLEAR				

ABSOLUTE MAXIMUM RATINGS TA=25℃

PARAMETER	MAX	UNITS
PEAK FORWARD CURRENT (R/G)*	180/150	mA
FORWARD CURRENT	30/30	mA
POWER DISIPATION (R/G)	75/75	mW
STORAGE TEMPERATURE	-40 to +85	℃
OPERATING TEMPERATURE	-40 to +85	℃

***t<10us**

CUSTON: MOISTURE SENITIVE DEVICE
PER JEDEC LEVEL 3 STANDARDS

*UNLESS OTHERWISE SPECIFIED TOLERANCES PER DECIMAL PRECISION ARE: X=±1 (±0.039), X.X=±0.5 (±0.020), X.XX=±0.25 (±0.010), X.XXX=±0.127 (±0.005). LEAD SIZE=±0.05 (±0.002), LEAD LENGTH=±0.75 (±0.030). MIN= $^{+\text{DECIMAL PRECISION}}_{-0.00}$ MAX.= $^{+0.00}_{-\text{DECIMAL PRECISION}}$

LUMEX® Creating LED and LCD Solutions Together™
N. GARY AVE.
CAROL STREAM, IL 60188
PHONE : 800-278-5666
FAX : 630-315-2150
WEB : WWW.LUMEX.COM425

1.6(L)*1.5(W)*0.7(H)mm, SURFACE MOUNT LED, AlInGap RED/AlInGaP GREEN BICOLOR LED, WATER CLEAR LENS, TAPE & REEL

****THE SPECIFICATIONS MAY CHANGE AT ANY TIME WITHOUT NOTICE DUE TO NEW MATERIALS OR PRODUCT IMPROVEMENT.****

CONFIDENTIAL INFORMATION
THE INFORMATION CONTAINED IN THIS DOCUMENT IS THE PROPERTY OF LUMEX INC. EXCEPT AS SPECIFICALLY AUTHORIZED IN WRITING BY LUMEX INC., THE HOLDER OF THIS DOCUMENT SHALL KEEP ALL INFORMATION CONTAINED HEREIN CONFIDENTIAL AND SHALL PROTECT SAME IN WHOLE OR IN PART FROM DISCLOSURE AND DISSEMINATION TO ALL THIRD PARTIES.

DATE : 2017.04.10	DRAWN BY : E.C.
PAGE : 1 OF 2	CHKD BY : G.Y.
SCALE : NTF	APRVD BY : R.C.
UNIT : mm [INCH]	Pb

Downloaded from Arrow.com.

PART NUMBER	SML-LX0606SISUGCTR	REV	E

REV	E.C.N. NUMBER AND REVISION COMMENTS	DATE
A	E.C.N. #11148	05.29.07
B	E.C.N. #11508	03.05.09
C	E.C.N. #11581	12.21.09
D	E.C.N. #11964	07.02.15
E	ECN-Lumex201700010	04.10.17

PROFILE

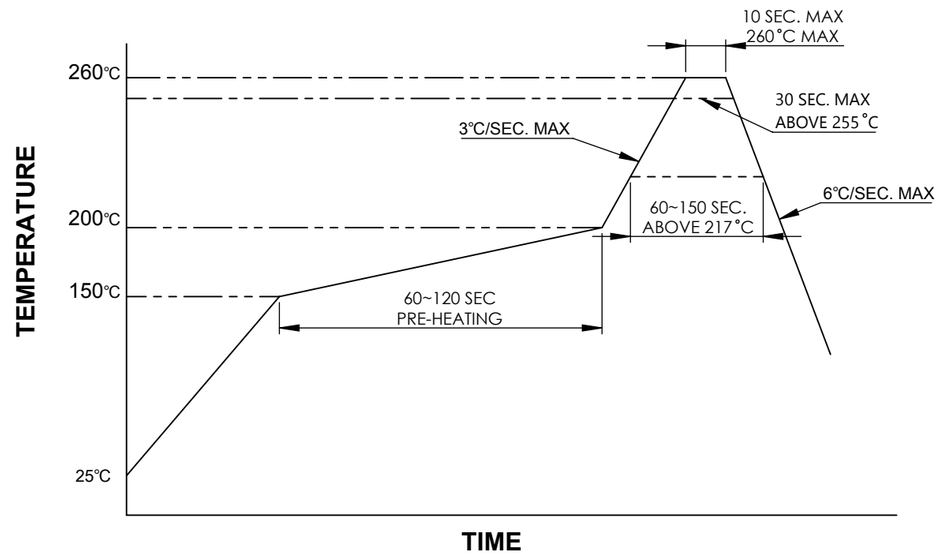

CARRIER TAPE DIMENSION

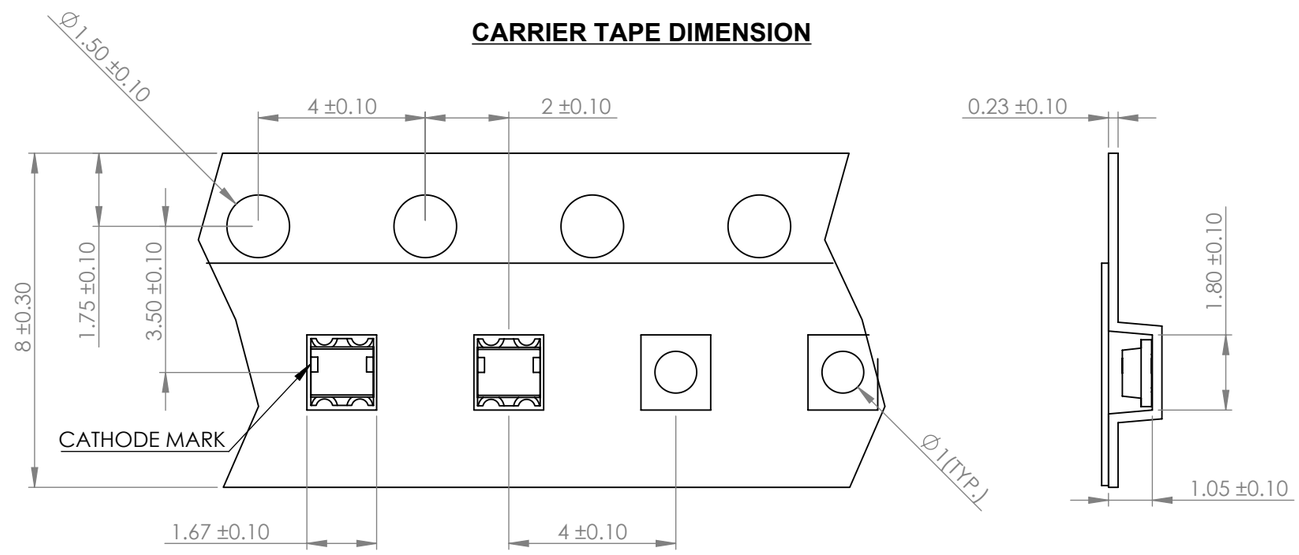

*UNLESS OTHERWISE SPECIFIED TOLERANCES PER DECIMAL PRECISION ARE: X=±1 (±0.039), X.X=±0.5 (±0.020), X.XX=±0.25 (±0.010), X.XXX=±0.127 (±0.005). LEAD SIZE=±0.05 (±0.002), LEAD LENGTH=±0.75 (±0.030). MIN= +DECIMAL PRECISION -0.00 MAX.= +0.00 -DECIMAL PRECISION

LUMEX® Creating LED and LCD Solutions Together™

N. GARY AVE.
CAROL STREAM, IL 60188
PHONE : 800-278-5666
FAX : 630-315-2150
WEB : WWW.LUMEX.COM425

1.6(L)*1.5(W)*0.7(H)mm, SURFACE MOUNT LED, AlInGap RED/AlInGaP GREEN BICOLOR LED, WATER CLEAR LENS, TAPE & REEL

THE SPECIFICATIONS MAY CHANGE AT ANY TIME WITHOUT NOTICE DUE TO NEW MATERIALS OR PRODUCT IMPROVEMENT.

CONFIDENTIAL INFORMATION

THE INFORMATION CONTAINED IN THIS DOCUMENT IS THE PROPERTY OF LUMEX INC. EXCEPT AS SPECIFICALLY AUTHORIZED IN WRITING BY LUMEX INC., THE HOLDER OF THIS DOCUMENT SHALL KEEP ALL INFORMATION CONTAINED HEREIN CONFIDENTIAL AND SHALL PROTECT SAME IN WHOLE OR IN PART FROM DISCLOSURE AND DISSEMINATION TO ALL THIRD PARTIES.

DATE : 2017.04.10	DRAWN BY : E.C.
PAGE : 2 OF 2	CHKD BY : G.Y.
SCALE : NTF	APRVD BY : R.C.
UNIT : mm [INCH]	Pb

Downloaded from Arrow.com.