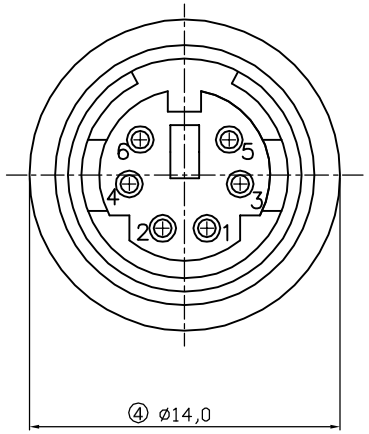

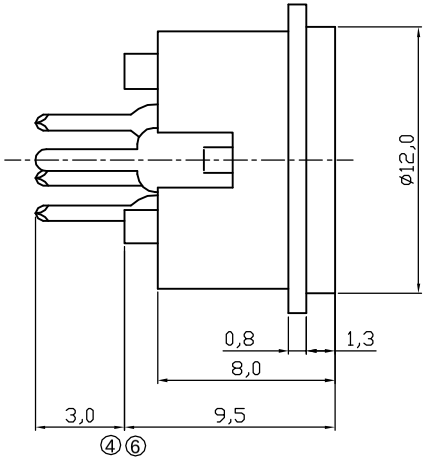

MATERIAL
Insulator Material: PBT+30%G.F (UL 94V-0) Black
Contact Material: Phosphor Bronze
Contact Plating: Full Gold-flash
Shell: Brass

MECHANICAL
Mating Force: 45N max.
Withdrawal Force: 7N min.
Durability: 500 cycles min.

④ ELECTRICAL
Current Rating: 1.0Amps/contact max.
Voltage Rating: 30V
Withstand continuous Voltage: 750VAC
Contact Resistance: 30mΩ/contact max.
Insulation Resistance: 1000MΩ min.

ENVIRONMENTAL
Operation Temperature: -25℃~ +85℃

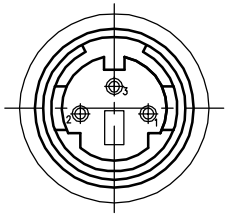

⑦ 3 Pins

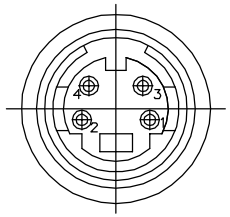

4 Pins

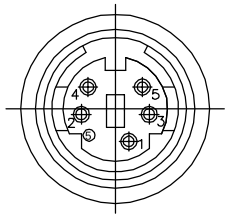

⑦ 5 Pins

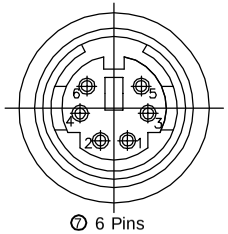

⑦ 6 Pins

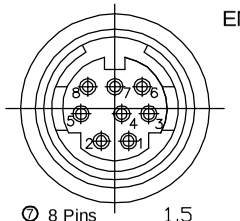

⑦ 8 Pins

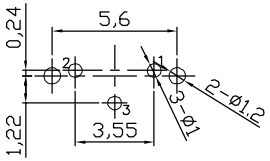

Recommended PCB Layout
Top View Tolerance(±0,05)

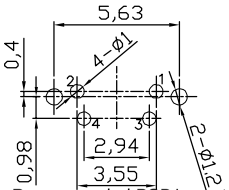

Recommended PCB Layout
Top View Tolerance(±0,05)

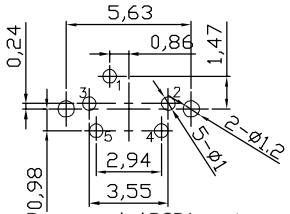

Recommended PCB Layout
Top View Tolerance(±0,05)

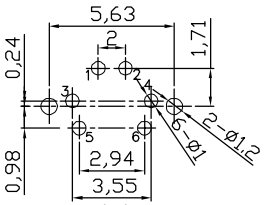

Recommended PCB Layout
Top View Tolerance(±0,05)

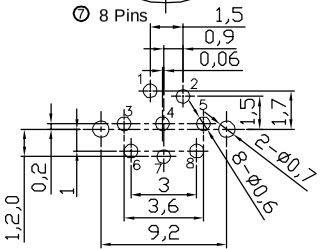

Recommended PCB Layout
Top View Tolerance(±0,05)

RoHS compliant

Unit: mm

Scale	Free
TOLERANCE	
X.X	±0.30
X.XX	±0.20
X.XXX	±0.10
DIM	TOL
X.°	±5°
X.X°	±3°
Angle	TOL

Id.	Modification	Date	Name
⑦	Collect pin count 3, 4, 5, 6 and 8 into Drawing doc.	24.05.2018	Segal
⑥	Update	21.05.2018	Segal
⑤	Update	25.03.2013	Amy
④	Update	12.12.2012	Amy
③	Change the manufacture plant	25.11.2010	Alex
②	Update	15.07.2009	Rale

	Date	Name
Drawn	27.02.2002	Hellwig
Approved	24.05.2018	Winnie

ASSMANN wsw components

Customer-No.

ASSMANN WSW-No.
⑦ A-DIO-TOP/xx

Drawing-No.
ASS 1010 CO

rev07

Replace

Sheet

Downloaded from Arrow.com.