PRELIMINARY

CYW20732Y

Bluetooth Low Energy SiP Module

General Description

The Cypress CYW20732Y is a Bluetooth Low-Energy (BLE)-only System-in-Package (SiP). The CYW20732Y radio has been designed to provide low power, low cost, and robust communications for applications operating in the globally available 2.4 GHz unlicensed Industrial, Scientific, and Medical (ISM) band.

The highly integrated module requires minimal external components to make a standalone 32-bit ARM™ Cortex™ M3 and 1 Mbit EEPROM BLE SiP module. The CYW20732Y is available in a 27-pin 3.5 mm × 3.2 mm x 1.0 mm maximum 27-LGA package.

Features

- Bluetooth Low-Energy (BLE)-compliant
- Infrared modulator
- IR learning
- Supports Adaptive Frequency Hopping (AFH)
- Excellent receiver sensitivity
- 10-bit auxiliary ADC with nine analog channels
- On-chip support for serial peripheral interface (master and slave modes)
- Broadcom Serial Control (BSC) interface (compatible with NXP I^2C slaves)
- Programmable output power control
- Integrated ARM Cortex-M3 based microprocessor core
- On-chip power-on reset (POR)
- Support for EEPROM and serial flash interfaces
- Integrated Low Drop Out (LDO) regulator
- On-chip, software controlled power management unit
- Programmable key scan matrix interface, up to 8 × 20 key-scanning matrix
- 32-bit ARM™ Cortex™ M3 microcontroller unit (MCU)
- Embedded 1 Mbit I^2C Memory capacity EEPROM memory capacity
- UART diverse serial interface
- Sensor applications support for I^2C, GPIO, and PCM
- MAC/BB/RF functionality on a single chip
- 2.4 GHz frequency band support
- BLE network standard compliance with Bluetooth Special Interest Group (SIG) requirements
- Compliance with Moisture Sensitivity Level (MSL) 3 for semiconductor packaging and handling precautions
- FCC and CE certification and compliance
- RoHS compliant
- Satisfies MSL3 and J-STD-020 specification requirements (peak temperature 260° C) and is capable of 260° C peak reflow.
- Satisfies Restriction of Hazardous Substances (RoHS) Directive 2002/95/EC and 2011/65/EU.
- 27-pin 27-Land Grid Array (LGA) (3.5 mm × 3.2 mm x 1.0 mm) package.

Downloaded from Arrow.com.

Figure 1. Functional Block Diagram

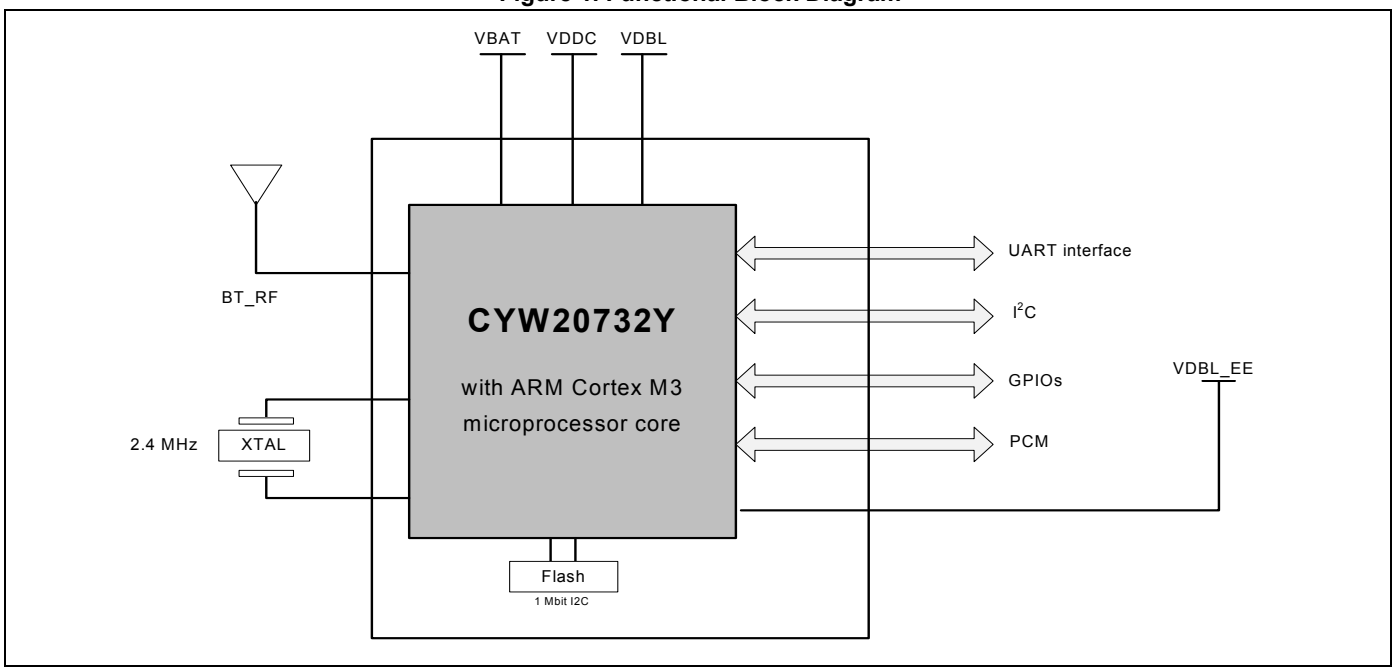

Introduction

This data sheet provides a description of the major blocks, interfaces, pin assignments, and specifications of the CYW20732Y single-chip Bluetooth low energy (BLE) SoC. This is a required document for designers responsible for adding the CYW20732Y BLE SoC to wireless input device applications including heart-rate monitors, blood-pressure monitors, proximity sensors, temperature sensors, and battery monitors.

Cypress Part Numbering Scheme

Cypress is converting the acquired IoT part numbers from Cypress to the Cypress part numbering scheme. Due to this conversion, there is no change in form, fit, or function as a result of offering the device with Cypress part number marking. The table provides Cypress ordering part number that matches an existing IoT part number.

Table 1. Mapping Table for Part Number between Broadcom and Cypress

Broadcom Part Number	Cypress Part Number
BCM20732Y	CYW20732Y
BCM20732YB3ISLGH (T)	CYW20732YB3ISLGH (T)

Acronyms and Abbreviations

In most cases, acronyms and abbreviations are defined upon first use. For a more complete list of acronyms and other terms used in Cypress documents, go to: http://www.cypress.com/glossary.

IoT Resources

Cypress provides a wealth of data at http://www.cypress.com/internet-things-iot to help you to select the right IoT device for your design, and quickly and effectively integrate the device into your design. Cypress provides customer access to a wide range of information, including technical documentation, schematic diagrams, product bill of materials, PCB layout information, and software updates. Customers can acquire technical documentation and software from the Cypress Support Community website (https://community.cypress.com/).

Downloaded from Arrow.com.

Contents

1. Functional Description 4
1.1 Bluetooth Baseband Core 4
1.1.1 Frequency Hopping Generator 4
1.1.2 E0 Encryption 4
1.1.3 Link Control Layer 4
1.1.4 Adaptive Frequency Hopping 4
1.1.5 Bluetooth Low Energy Profiles 4
1.1.6 Test Mode Support 5
1.2 Infrared Modulator 5
1.3 Infrared Learning 5
1.4 Serial Peripheral Interface 5
1.5 Microprocessor Unit 6
1.5.1 EEPROM Interface 6
1.5.2 Serial Flash Interface 6
2. Pin Assignments 7
2.1 Pin Descriptions 7
2.2 Pin Definition 8
3. Electrical Specifications 9
3.1 Absolute Maximum Ratings 9
3.2 Recommended Operating Conditions 9
3.2.1 Temperature and Humidity 9
3.2.2 Voltage 9
3.2.3 Current Consumption 9
4. RF Specifications 10
4.1 RF Performance 10
4.2 RF Transmitter Specifications 10
5. Timing Specifications 11
5.1 External Reset 11
5.2 Timing and AC Characteristics 12
5.2.1 SPI Timing 12
5.2.2 BSC Interface Timing 13
5.2.3 UART Timing 14
5.2.4 Crystal Oscillator 14
6. Mechanical 15
6.1 Dimensions 15
6.2 Recommended Footprint 16
6.3 Recommended Stencil 17
6.4 Recommended Reflow Profile 18
7. Packaging and Storage 19
7.1 Package Dimensioning 19
7.2 Laser Mark 20
7.3 Pin 1 Location in the Tape/Reel 20
7.4 Moisture Sensitive Level (MSL) 21
7.5 SiP Module Tray 22
7.6 Product Qualification Report 23
8. Ordering Information 24
Document History Page 25
Sales, Solutions, and Legal Information 26

Downloaded from Arrow.com.

1. Functional Description

1.1 Bluetooth Baseband Core

The Bluetooth Baseband Core (BBC) implements all of the time-critical functions required for high performance Bluetooth operation. The BBC manages the buffering, segmentation, and data routing for all connections. It also buffers data that passes through it, handles data flow control, schedules ACL TX/RX transactions, monitors Bluetooth slot usage, optimally segments and packages data into baseband packets, manages connection status indicators, and composes and decodes HCI packets. In addition to these functions, it independently handles HCI event types and HCI command types.

The following transmit and receive functions are also implemented in the BBC hardware to increase TX/RX data reliability and security before sending over the air:

- Receive Functions: symbol timing recovery, data deframing, forward error correction (FEC), header error control (HEC), cyclic redundancy check (CRC), data decryption, and data dewhitening.
- Transmit Functions: data framing, FEC generation, HEC generation, CRC generation, link key generation, data encryption, and data whitening.

1.1.1 Frequency Hopping Generator

The frequency hopping sequence generator selects the correct hopping channel number depending on the link controller state, Bluetooth clock, and device address.

1.1.2 E0 Encryption

The encryption key and the encryption engine are implemented using dedicated hardware to reduce software complexity and provide minimal processor intervention.

1.1.3 Link Control Layer

The link control layer is part of the Bluetooth link control functions that are implemented in dedicated logic in the link control unit (LCU). This layer consists of the Command Controller, which takes software commands, and other controllers that are activated or configured by the Command Controller to perform the link control tasks. Each task performs a different Bluetooth link controller state. STANDBY and CONNECTION are the two major states. In addition, there are five substates: page, page scan, inquiry, and inquiry scan.

1.1.4 Adaptive Frequency Hopping

The CYW20732Y gathers link quality statistics on a channel-by-channel basis to facilitate channel assessment and channel map selection. The link quality is determined by using both RF and baseband signal processing to provide a more accurate frequency hop map.

1.1.5 Bluetooth Low Energy Profiles

The CYW20732Y supports Bluetooth low-energy, including the following profiles that are supported[1] in ROM:

- Battery status
- Blood pressure monitor
- Find me
- Heart rate monitor
- Proximity
- Thermometer
- Weight scale
- Time

1.Full qualification and use of these profiles may require firmware updates from Cypress. Some of these profiles are under development/approval at the Bluetooth SIG and conformity with the final approved version is pending. Contact your supplier for updates and the latest list of profiles.

Downloaded from Arrow.com.

The following additional profiles can be supported[1] from RAM:

- Blood glucose monitor
- Temperature alarm
- Location
- Custom profile

1.1.6 Test Mode Support

The CYW20732Y fully supports Bluetooth Test mode, as described in the Bluetooth low energy specification.

1.2 Infrared Modulator

The CYW20732Y includes hardware support for infrared TX. The hardware can transmit both modulated and unmodulated waveforms. For modulated waveforms, hardware inserts the desired carrier frequency into all IR transmissions. IR TX can be sourced from firmware-supplied descriptors, a programmable bit, or the peripheral UART transmitter.

If descriptors are used, they include IR on/off state and the duration between 1 and 32,767 µsec. The CYW20732Y IR TX firmware driver inserts this information in a hardware FIFO and makes sure that all descriptors are played out without a glitch due to underrun.

1.3 Infrared Learning

The CYW20732Y includes hardware support for infrared learning. The hardware can detect both modulated and unmodulated signals. For modulated signals, the CYW20732Y can detect carrier frequencies between 10 kHz– 500 kHz and the duration that the signal is present or absent. The CYW20732Y firmware driver supports further analysis and compression of learned signal. The learned signal can then be played back through the CYW20732Y IR TX subsystem.

1.4 Serial Peripheral Interface

The CYW20732Y has two independent SPI interfaces. One is a master-only interface and the other can be either a master or a slave. Each interface has a 16-byte transmit buffer and a 16-byte receive buffer. To support more flexibility for user applications, the CYW20732Y has optional I/O ports that can be configured individually and separately for each functional pin.

Downloaded from Arrow.com.

1.5 Microprocessor Unit

The CYW20732Y microprocessor unit (µPU) executes software from the link control (LC) layer up to the application layer components. The microprocessor is based on an ARM Cortex-M3, 32-bit RISC processor with embedded ICE-RT debug and JTAG interface units. The µPU has 320 KB of ROM for program storage and boot-up, 60 KB of RAM for scratch-pad data, and patch RAM code. The SoC has a total storage of 380 KB, including RAM and ROM.

The internal boot ROM provides power-on reset flexibility, which enables the same device to be used in different HID applications with an external serial EEPROM or with an external serial flash memory. At power-up, the lowest layer of the protocol stack is executed from the internal ROM memory.

External patches may be applied to the ROM-based firmware to provide flexibility for bug fixes and feature additions. The device can also support the integration of user applications.

1.5.1 EEPROM Interface

The CYW20732Y provides a Broadcom Serial Control (BSC) master interface. BSC is programmed by the CPU to generate four types of bus transfers: read-only, write-only, combined read/write, and combined write/read. BSC supports both low-speed and fast mode devices. BSC is compatible with an NXP I^2C slave device, except that master arbitration (multiple I^2C masters contending for the bus) is not supported.

The EEPROM can contain customer application configuration information including application code, configuration data, patches, pairing information, BD_ADDR, baud rate, SDP service record, and file system information used for code.

Native support for the Microchip 24LC128, Microchip 24AA128, and the STMicroelectronics M24128-BR is included.

1.5.2 Serial Flash Interface

The CYW20732Y includes an SPI master controller that can be used to access serial flash memory. The SPI master contains an AHB slave interface, transmit and receive FIFOs, and the SPI core PHY logic.

Devices natively supported include the following:

- Atmel® AT25BCM512B
- MXIC MX25V512ZUI-20G

Downloaded from Arrow.com.

2. Pin Assignments

2.1 Pin Descriptions

Table 1. Pin Descriptions

Pin Number	Pin Name	I/O Type	Description
1	VBAT	I	RF Power Supply
2	GND	GND	GND
3	GND	GND	GND
4	BT _RF	I/O	Antenna Port for Bluetooth Tx/Rx.
5	GND	GND	GND
6	XIN	I	Crystal oscillator input. See Table 11 for options.
7	XOUT	O	Crystal oscillator output.
8	VDDC_input	I	Baseband power supply
9	VDBL	I	IO pad and core supply
10	SCL	I/O PU	Clock signal for an external I^2C device
11	SDA	I/O PU	Data signal for an external I^2C device
12	UART_TX	O PU	UART_TX
13	UART_RX	I	UART_RX
14	RESET_N	I/O PU	Active-low system reset with open-drain output and internal pull-up resistor.
15	PUART_RX GPIO: P0	–	Peripheral UART: puart_tx Default Direction: Input After POR State: Input Floating Alternate Function Description: 1. A/D converter input 2. SPI_2: MOSI (master and slave) 3. IR_RX 4. 60Hz_main 5. GPIO: P0 Not available during TMC=1
16	PUART_TX GPIO: P33	–	Peripheral UART: puart_rx Default Direction: Input After POR State: Input Floating Alternate Function Description: 1. A/D converter input 2. SPI_2: MOSI (slave only) 3. Auxiliary clock output: ACLK1 4. GPIO: P33
17	VDBL_EE	I	EEPORM power supply
18	PCM_SERO GPIO: P25	–	SPI_2: MISO (master and slave) Default Direction: Input After POR State: Input Floating Alternate Function Description: 1. Peripheral UART: puart_rx 2. GPIO: P25
19	PCM_CLK GPIO: P24	–	SPI_2: SPI_CLK (master and slave) Default Direction: Input After POR State: Input Floating Alternate Function Description: 1. SPI_2: SPI_CLK (master and slave) 2. SPI_1: MISO (master only) 3. Peripheral UART: puart_tx 4. GPIO: P25

Downloaded from Arrow.com.

Table 1. Pin Descriptions (Cont.)

Pin Number	Pin Name	I/O Type	Description
20	PCM_SERI P GPIO: P4	–	SPI_2: MOSI (master and slave) Default Direction: Input After POR State: Input Floating Alternate Function Description: 1. Peripheral UART: puart_rx 2. IR_TX 3. GPIO: P4
21	PCM_FR GPIO: P26 PWM0	–	SPI_2: SPI_CS (slave only) Default Direction: Input After POR State: Input Floating Alternate Function Description: 1. SPI_1: MISO (master only) 2. GPIO: P26 Provides 16 mA drive strength at 3.3V supply
22	GPIO: P11	–	Default Direction: Input After POR State: Input Floating Alternate Function Description: 1.A/D converter input
23	GND	GND	Ground
24	GND	GND	Ground
25	GND	GND	Ground
26	GND	GND	Ground
27	EEWEN	I	

2.2 Pin Definition

Figure 1 shows the 27-pin number land grid array (LGA) sequence definition.

Figure 1. 27-Pin LGA Sequence Definition

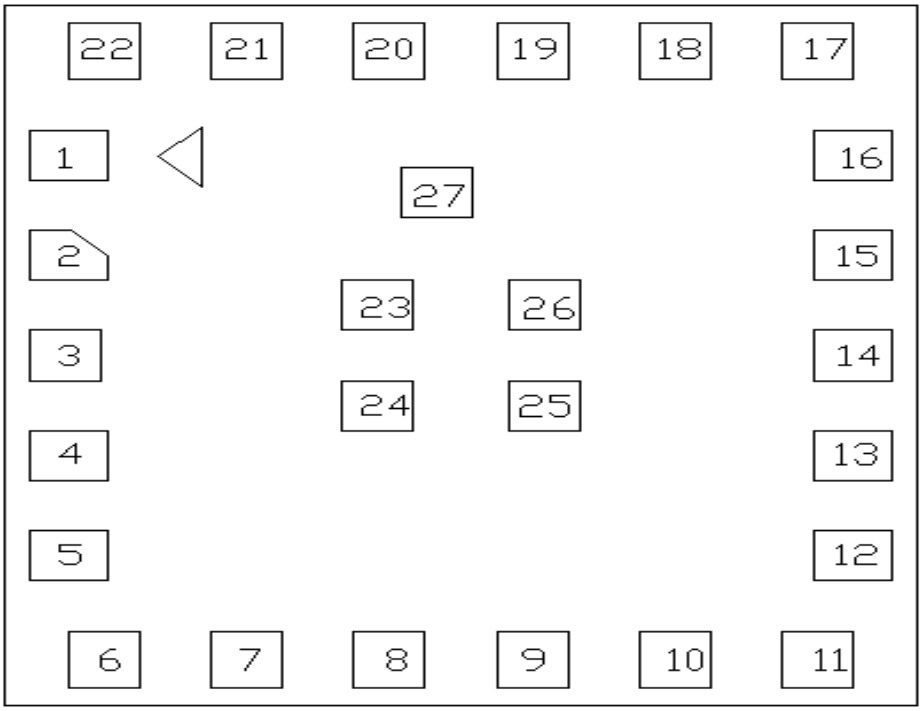

Downloaded from Arrow.com.

3. Electrical Specifications

3.1 Absolute Maximum Ratings

Table 2. Absolute Maximum Ratings

Requirement	Power	Min	Max
Storage Temperature	–	–40° C	125°C
Voltage ripple	–	Max. Values not exceeding Operating voltage (+/- 2%)	
Power Supply Absolute Maximum Ratings	VBAT	-	1.4V
Power Supply Absolute Maximum Ratings	VDDC_Input	-	1.4V
Power Supply Absolute Maximum Ratings	VDBL	-	3.8V
Power Supply Absolute Maximum Ratings	VDBL_EE	-	3.8V

3.2 Recommended Operating Conditions

3.2.1 Temperature and Humidity

The CYW20732Y module must withstand the operational requirements shown in Table 3.

Table 3. Temperature and Humidity

Condition	Rating	Description
Operating Temperature	–30°C to 85°C	–
Humidity range	Maximum 95%	Non condensing, relative humidity

3.2.2 Voltage

The power supply for the CYW20732Y module is provided by the host via the power pins.

Table 4. Recommended Voltages

Symbol	Parameter	Min	Typ	Max	Unit
VBAT	–	1.14	1.2	1.26	V
VDDC_Input	–	1.14	1.2	1.26	–
VDBL	–	1.62	–	3.63	–
VDBL_EE	–	1.70	–	3.63	V

3.2.3 Current Consumption

The current consumption ratings will be based on an operating temperature condition of 25°C.

Table 5. Current Consumption

Item	Condition	Min	Nom	Max	Unit
Receive	Receiver and baseband are both operating at 100%	19.0	–	20.8	mA
Transmit	Transmitter and baseband are both operating at 100%	19.0	–	19.7	mA
Sleep	–	1.2	–	1.5	µA

Downloaded from Arrow.com.

4. RF Specifications

4.1 RF Performance

Table 6. RF Performance

Parameter	Mode and Conditions	Min.	Typ.	Max.	Unit
Receiver Section					
Frequency range		2402	–	2480	MHz
RX sensitivity (standard)	Packets: 200, Payload: PRBS 9, Length: 37 Bytes, Dirty Transmitter: off. PER: 30.8%	–92	–	–	dBm
Maximum input		–10	–	–	dBm

4.2 RF Transmitter Specifications

Table 7. RF Transmitter Specifications

Parameter	Mode and Conditions	Min.	Typ.	Max.	Unit
Transmitter Section					
Frequency range	–	2402	–	2480	MHz
Output power adjustment range	–	-20	–	4	dBm
Output power	–	–	3	–	dBm
Output power variation	–	–	2	–	dB
LO Performance					
Initial carrier frequency tolerance	-	–	–	±150	KHz
Frequency Drift					
Frequency drift	–	–	–	±50	kHz
Drift rate	–	–	–	20	kHz/50 µs
Frequency Deviation					
Average deviation in payload (sequence used is 00001111)	–	225	–	275	kHz
Average deviation in payload (sequence used is 10101010)	–	185	–	–	kHz
Channel spacing	–	–	2	–	MHz
Note: The RF transmitter specification compliance is to the BT 4.0 standard with conductive measurements.					

Downloaded from Arrow.com.

5. Timing Specifications

5.1 External Reset

Figure 2. External Reset Timing

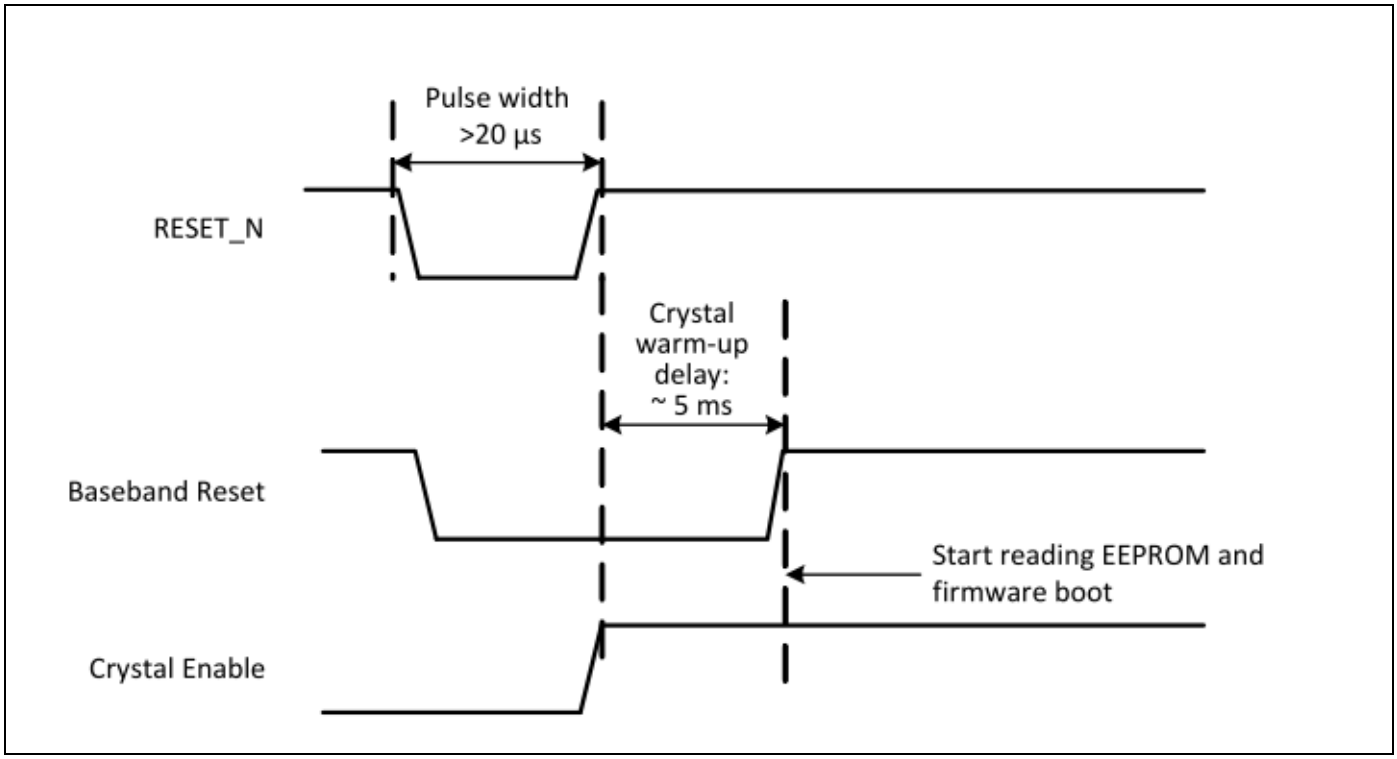

Downloaded from Arrow.com.

5.2 Timing and AC Characteristics

5.2.1 SPI Timing

Figure 3. SPI Timing: Modes 0 and 2

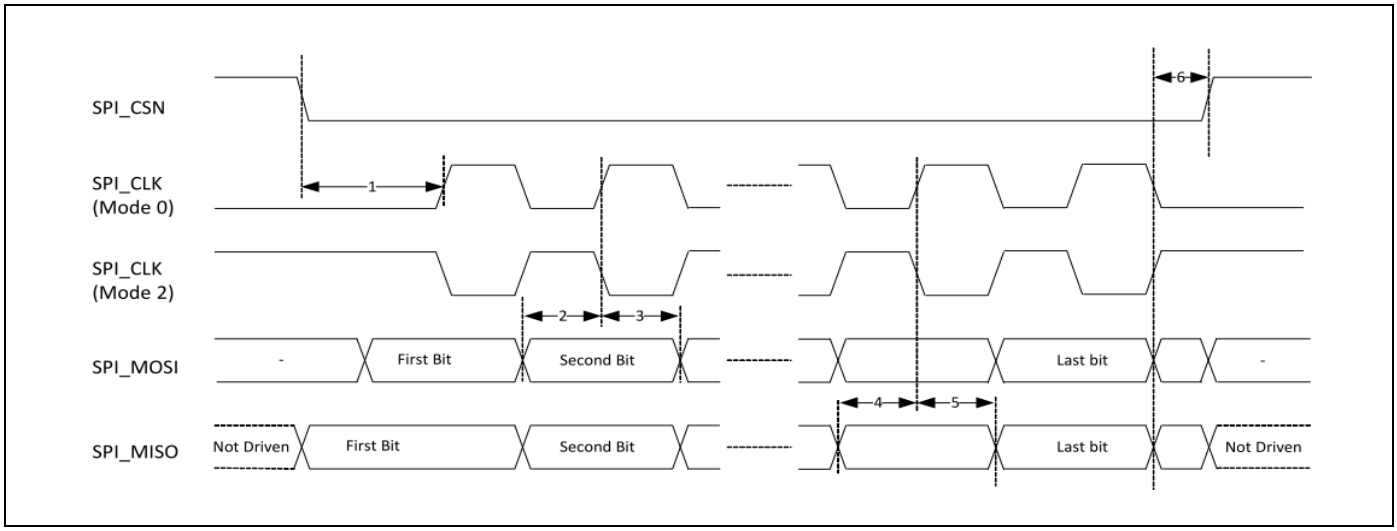

Figure 4. SPI Timing: Modes 1 and 3

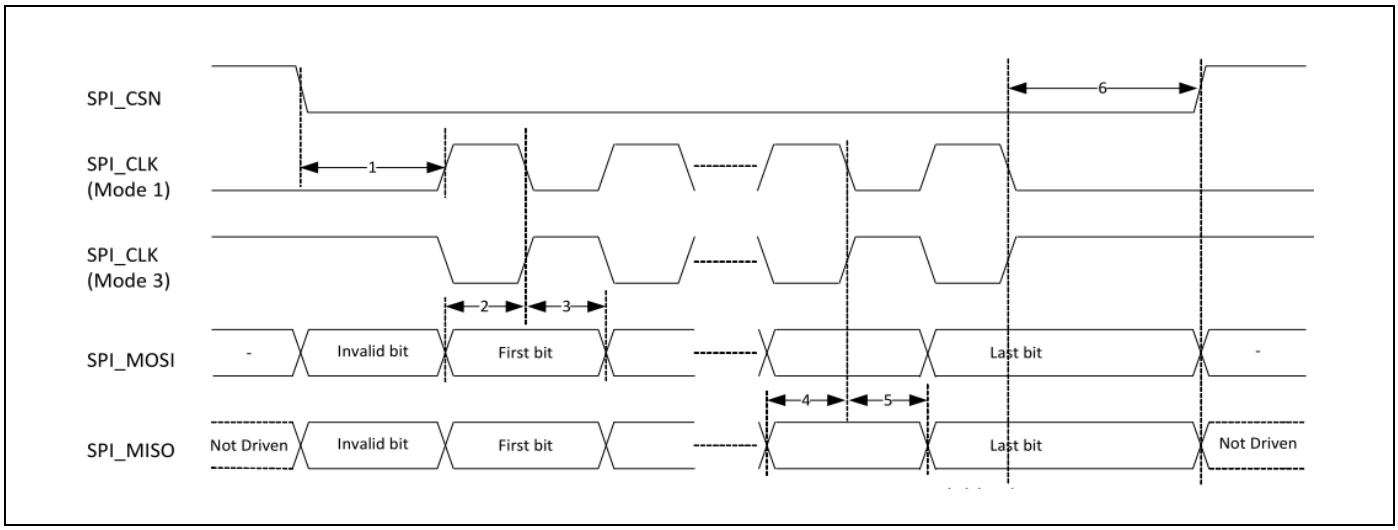

Table 8. SPI Interface Timing Specifications

Reference	Characteristics	Min	Typ	Max
1	Time from CSN asserted to first clock edge	1 SCK	100	∞
2	Master setup time	–	1/2SCK	–
3	Master hold time	1/2SCK	–	–
4	Slave setup time	–	1/2 SCK	–
5	Slave hold time	1/2 SCK	–	–
6	Time from last clock edge to CSN deasserted	SCK	10 SCK	100

Downloaded from Arrow.com.

5.2.2 BSC Interface Timing

Figure 5. BSC Interface Timing

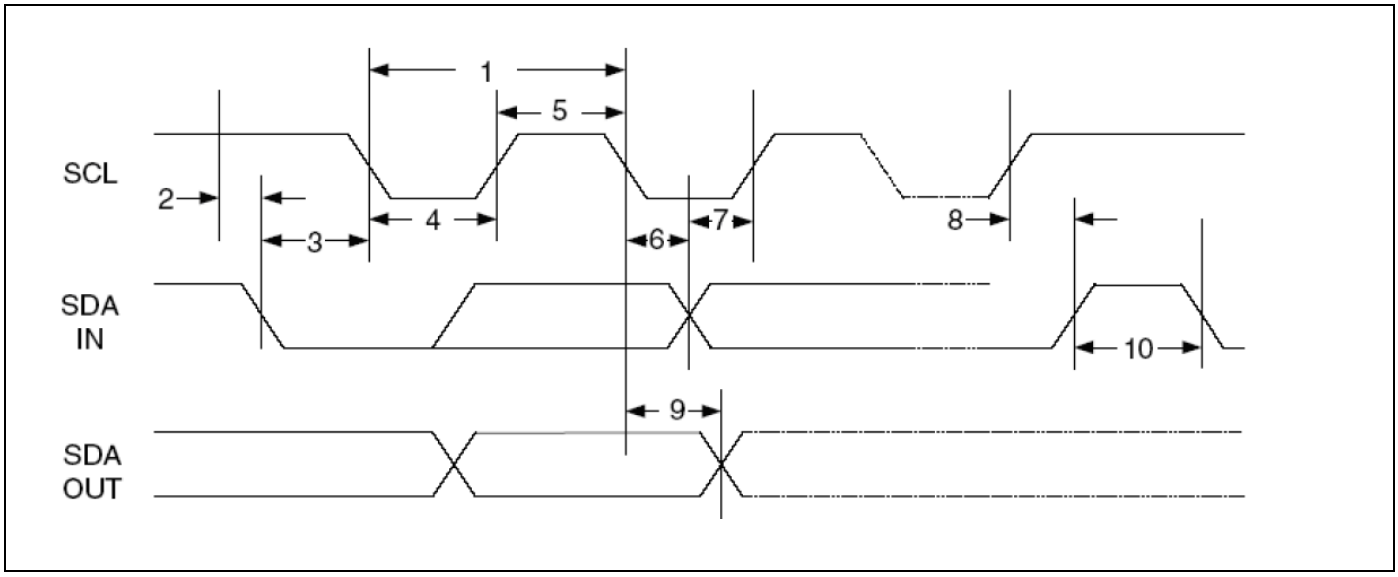

Table 9. BSC Interface Timing Specifications

Reference	Characteristics	Min	Max	Unit
1	Clock frequencies	–	100	KHz
		–	400	KHz
		–	800	KHz
		–	1000	KHz
2	START condition setup time	650	–	ns
3	START condition hold time	280	–	ns
4	Clock low time	650	–	ns
5	Clock high time	280	–	ns
6	Data input hold time	0	–	ns
7	Data input setup time	100	–	ns
8	STOP condition setup time	280	–	ns
9	Output valid from clock	–	400	ns
10	Bus free time	650	–	ns

Downloaded from Arrow.com.

5.2.3 UART Timing

Figure 6. UART Timing

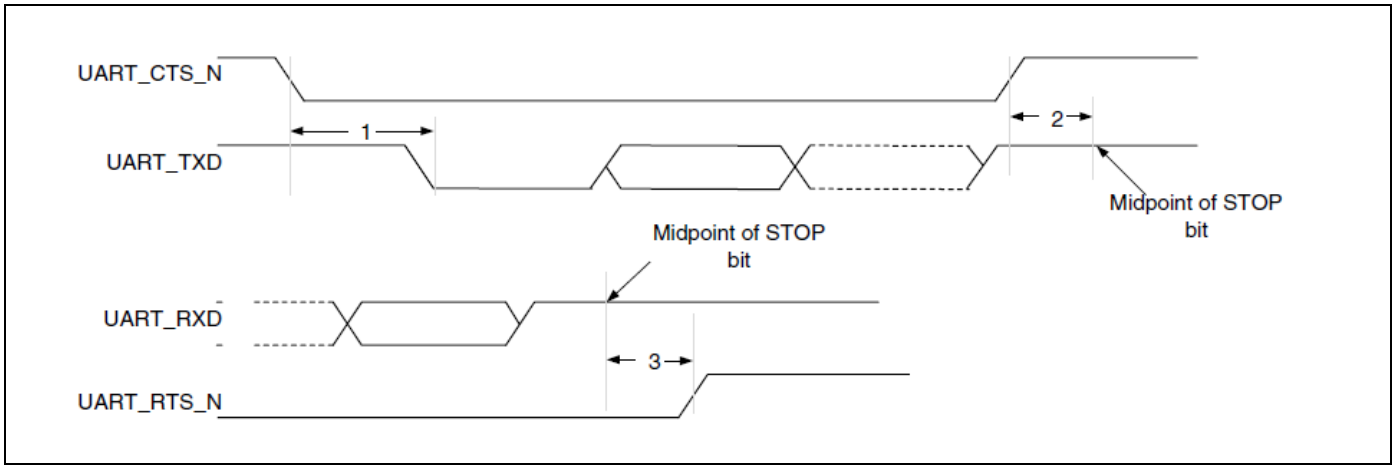

Table 10. UART Timing Specifications

Reference	Characteristics	Min	Max	Unit
1	Delay time, UART_CTS_N low to UART_TXD valid	–	24	Baudout cycles
2	Setup time, UART_CTS_N high before midpoint of stop bit	–	10	ns
3	Delay time, midpoint of stop bit to UART_RTS_N high	–	2	Baudout cycles

5.2.4 Crystal Oscillator

The CYW20732Y is set with a crystal frequency of 24 MHz. The crystal oscillator requires a crystal with an accuracy of ±20 ppm as defined by the Bluetooth specification. Two external load capacitors in the range of 5 pF to 30 pF are required to function with the crystal oscillator. The selection of the load capacitors is crystal dependent. Table 11 shows the recommended crystal specification.

Table 11. Crystal Oscillator

Parameter	Symbol	Conditions	Min	Typ	Max	Unit
Frequency	–	–	–	24.000	–	MHz
Oscillation Mode	–	Fundamental	–	–	–	
Frequency tolerance	@25°C	–	–	±10	–	ppm
Tolerance stability over temp	@-20°C to +85°C	–	–	±10	–	ppm
Equivalent series resistance	–	–	–	–	50	Ω
Load Capacitance	–	–	–	12	–	pF

Downloaded from Arrow.com.

6. Mechanical

6.1 Dimensions

The physical dimensions of the CYW20732Y module are 3.5 mm (W) x 3.2 mm (L) x 1.0 mm (H).

Tolerance: ± 0.1 mm

The mechanical dimensions of the CYW20732Y module are 3.5 x 3.2 x 1.0 mm^3.

Figure 7. BCM20732Y Mechanical Drawing

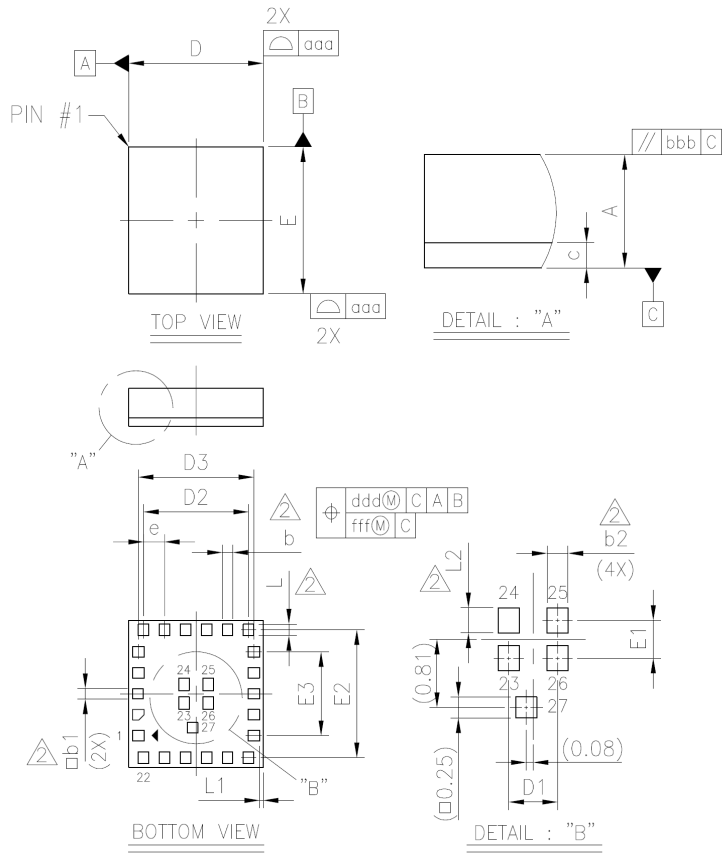

Symbol	Dimension in mm			Dimension in inch		
	MIN	NOM	MAX	MIN	NOM	MAX
A	0.84	0.90	0.96	0.033	0.035	0.038
c	0.16	0.20	0.24	0.006	0.008	0.009
D	3.10	3.20	3.30	0.122	0.126	0.130
E	3.40	3.50	3.60	0.134	0.138	0.142
D1	---	0.58	---	---	0.023	---
E1	---	0.45	---	---	0.018	---
D2	---	2.50	---	---	0.098	---
E2	---	3.05	---	---	0.120	---
D3	---	2.75	---	---	0.108	---
E3	---	2.00	---	---	0.079	---
e	---	0.50	---	---	0.020	---
b	---	0.25	---	---	0.010	---
b1	---	0.25	---	---	0.010	---
b2	---	0.25	---	---	0.010	---
L	---	0.28	---	---	0.011	---
L1	---	0.09	---	---	0.004	---
L2	---	0.30	---	---	0.012	---
aaa	0.15			0.006		
bbb	0.10			0.004		
ddd	0.10			0.004		
fff	0.05			0.002		

NOTE:
1. CONTROLLING DIMENSION : MILLIMETER
2. DIMENSION b,b1,b2,b3,b4,L,L2,L3 IS MEASURED AT THE MAXIMUM OPENING DIAMETER, PARALLEL TO PRIMARY DATUM C.

Downloaded from Arrow.com.

6.2 Recommended Footprint

The CYW20732Y module dimension measurement is in mm.

Figure 8. BCM20732Y Recommended Footprint

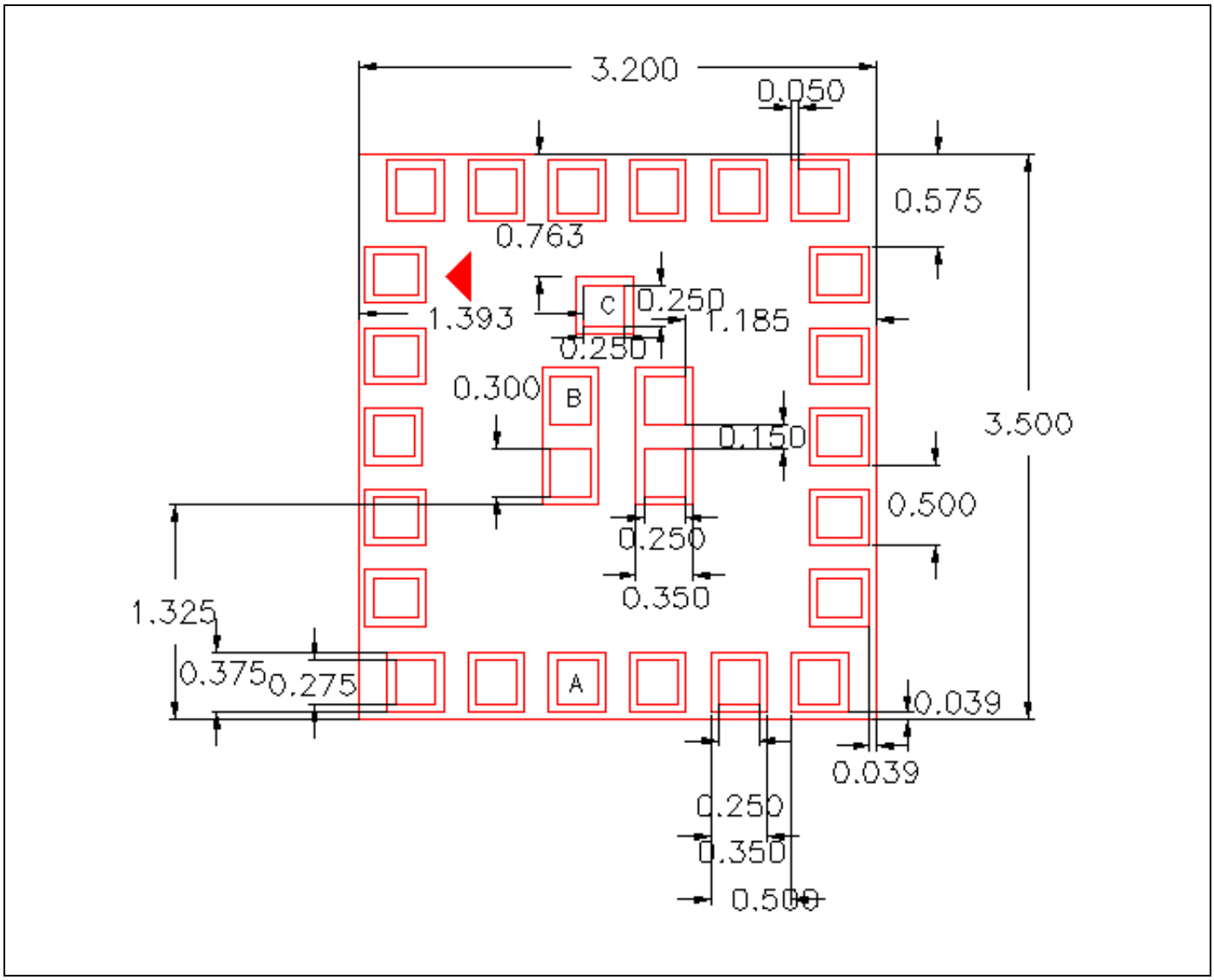

Notes:

1. Use the NCMD standard to design the main board footprint.
2. There are three types of pads in the module:
   a. Type A: pad size: 0.275 x 0.25 mm with a solder mask opening of 0.375 x 0.35 mm.
   b. Type B: pad size: 0.3 x 0.25 mm with a solder mask opening of 0.4 x 0.35 mm.
   c. Type C: pad size: 0.25 x 0.25 mm with a solder mask opening of 0.35 x 0.35 mm.

Downloaded from Arrow.com.

6.3 Recommended Stencil

The CYW20732Y module dimension measurement is in mm.

Figure 9. BCM20732Y Recommended Stencil

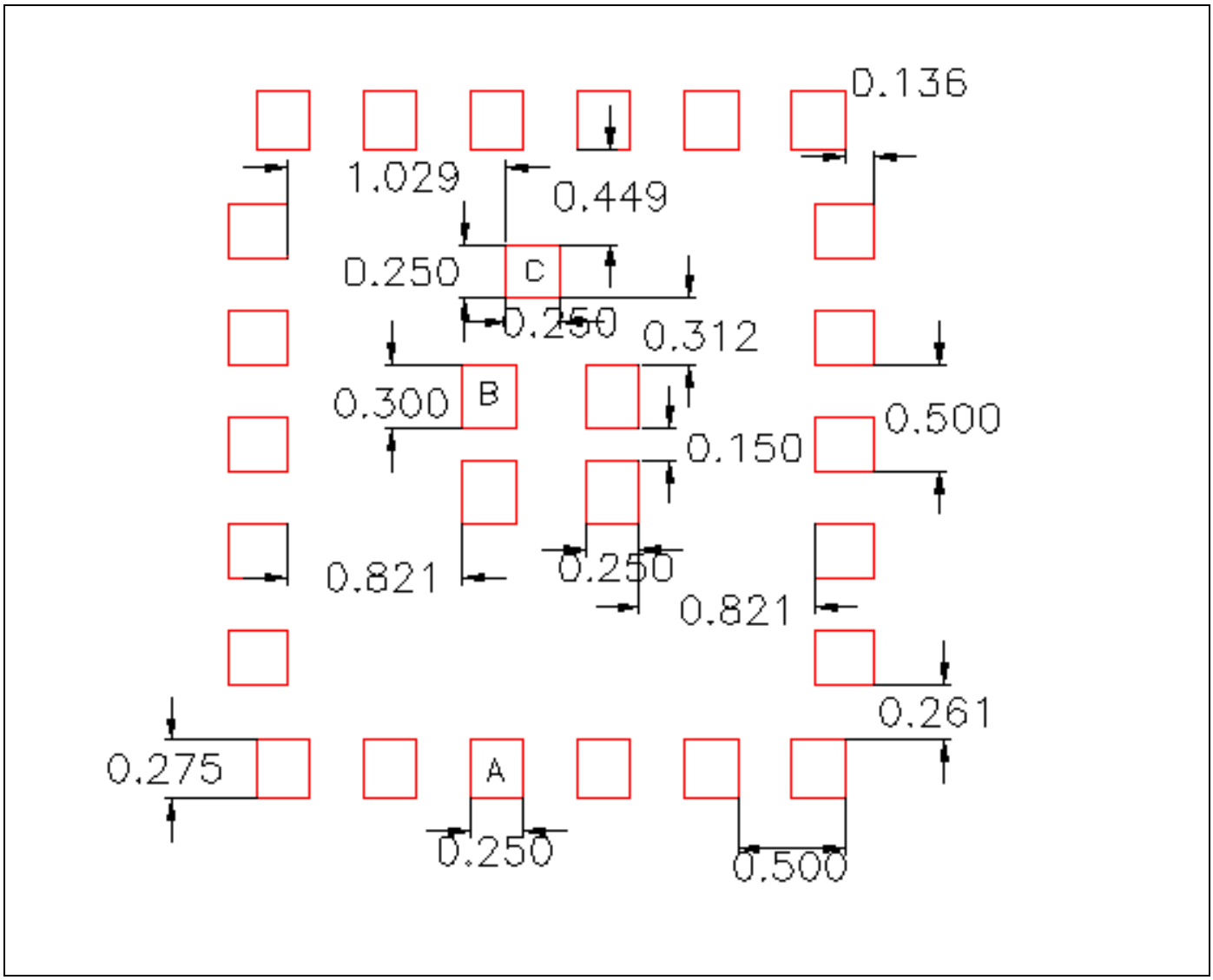

Notes:

1. Stencil thickness is 0.08~0.1 mm
2. Type 4 solder paste is recommended.

Downloaded from Arrow.com.

6.4 Recommended Reflow Profile

Figure 10. Recommended Reflow Profile

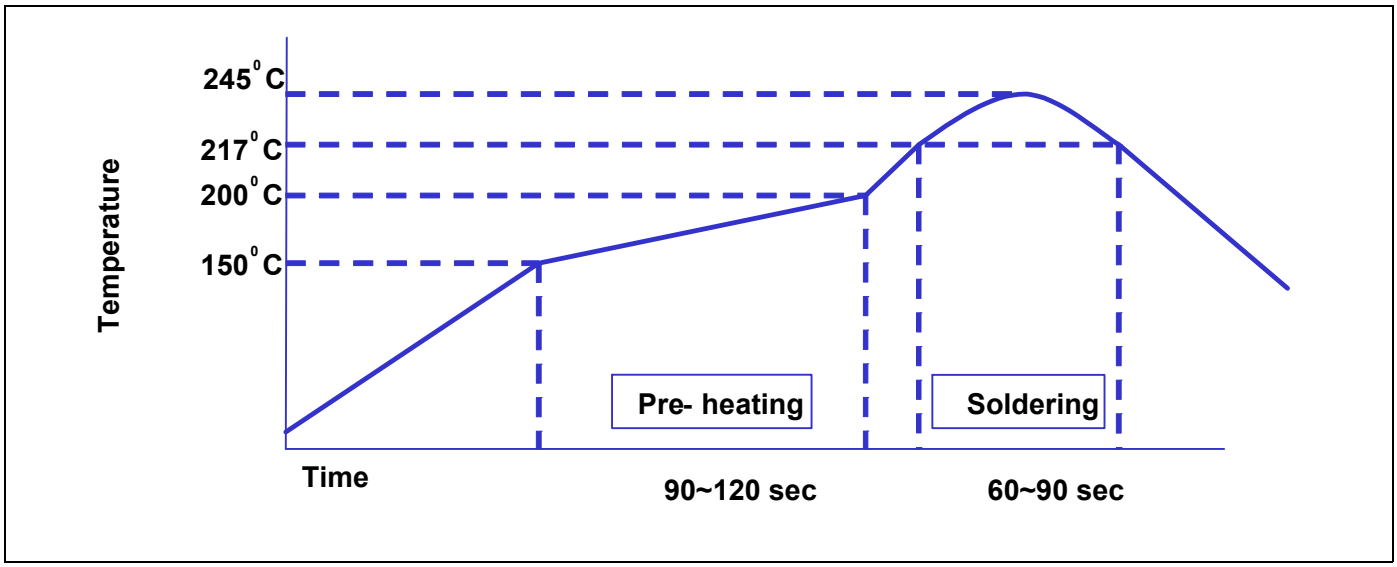

Downloaded from Arrow.com.

7. Packaging and Storage

7.1 Package Dimensioning

Figure 11. Package Dimensioning

Downloaded from Arrow.com.

7.2 Laser Mark

Figure 12. Laser Mark

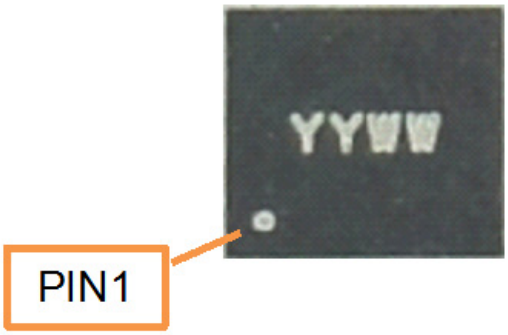

7.3 Pin 1 Location in the Tape/Reel

Figure 13. Pin 1 Location in the Tape/Reel

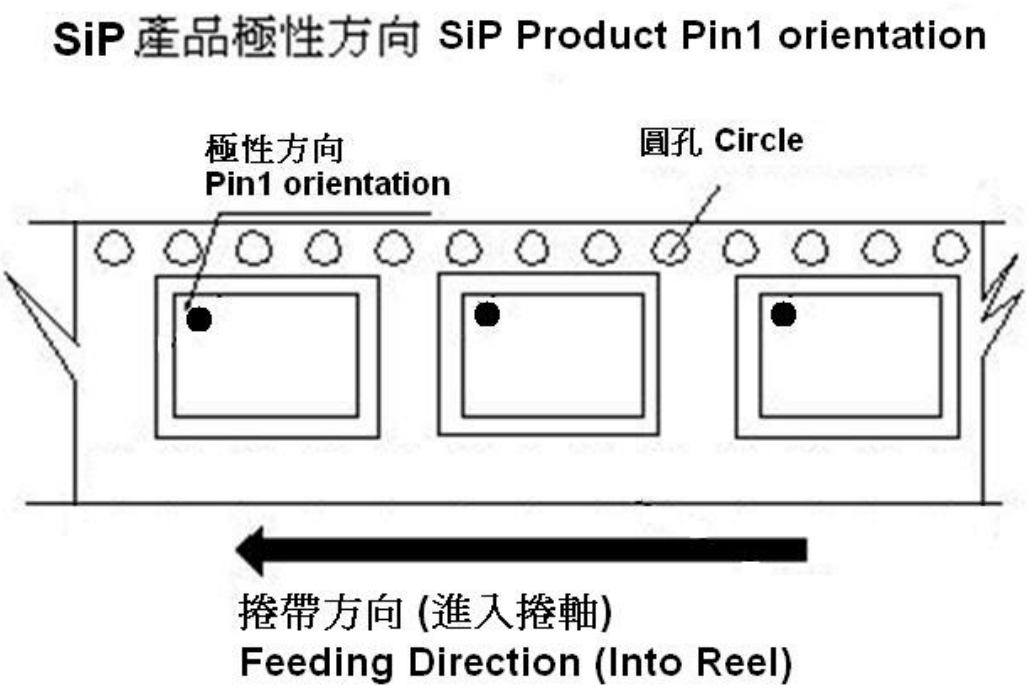

Downloaded from Arrow.com.

7.4 Moisture Sensitive Level (MSL)

Figure 14. Moisture Sensitive Level (MSL)

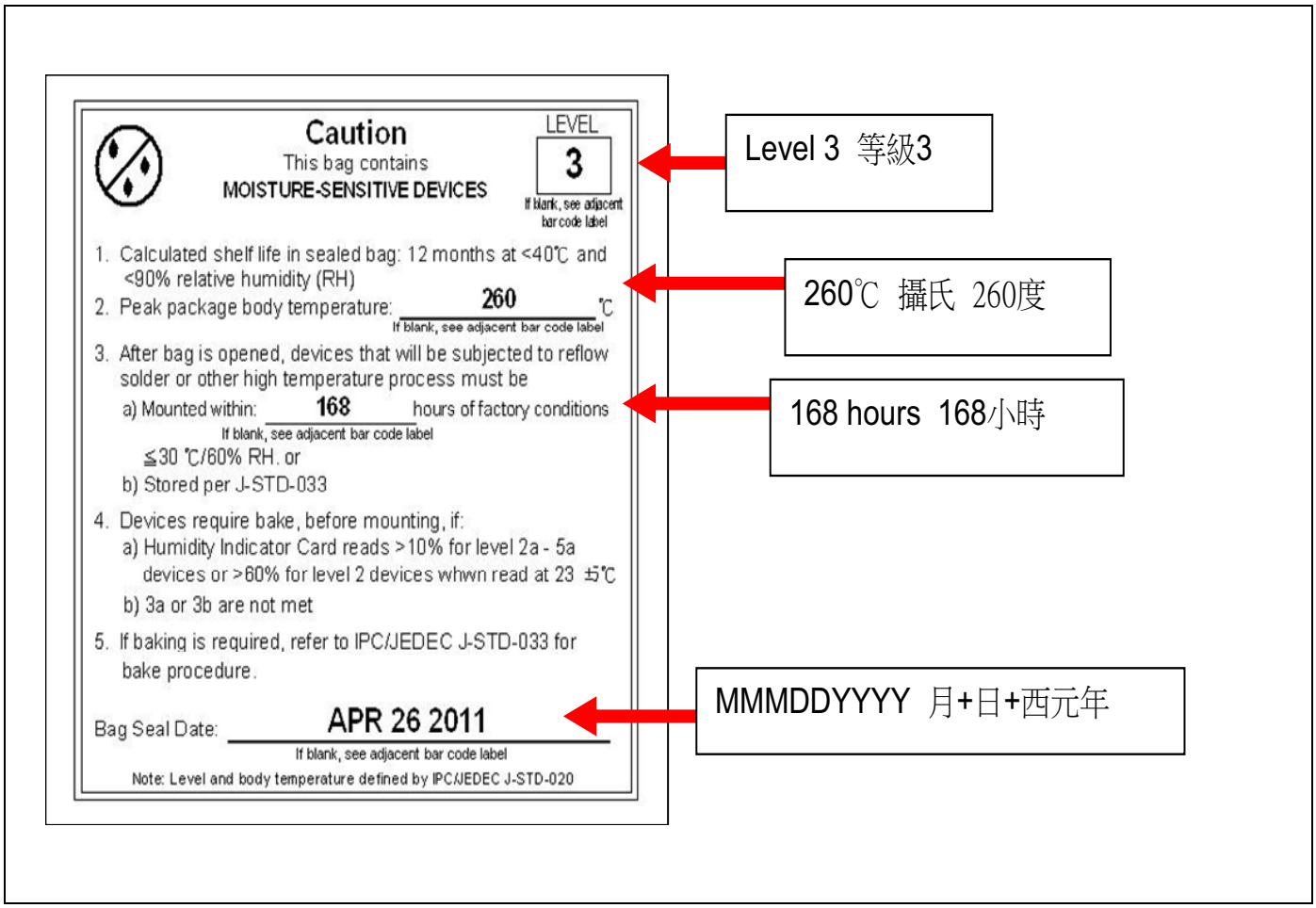

Downloaded from Arrow.com.

Downloaded from Arrow.com.

7.5 SiP Module Tray

The CYW20732Y SiP module tray is shown in Figure 15. The tray dimensions are 3.2 mm x 3.5 mm.

Figure 15. SiP Module Tray

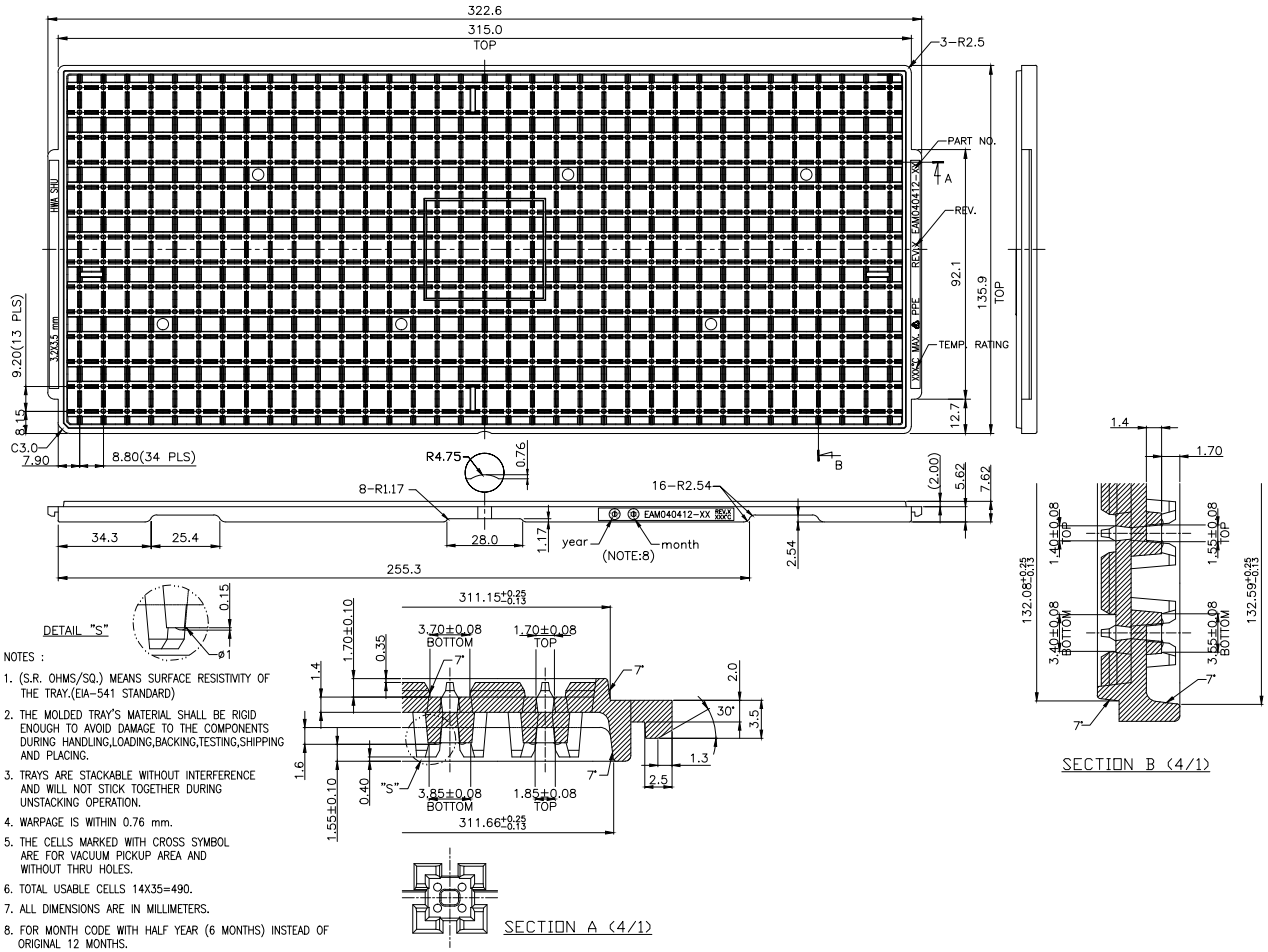

7.6 Product Qualification Report

Table 12 shows the official results for CYW20732Y Bluetooth Connectivity product qualification. The package type is a 3.2 mm x 3.5 mm 27-pin SLG.

Table 12. Product Qualification Report

Test	Specification	Conditions	Sample Size	Read Point in hours/cycles	Results
Biased Highly Accelerated Stress Test (BHAST)	JESD22-A110	130°C, 85% RH	77	96 hours	Pass
Unbiased Highly Accelerated Stress Test (UHAST)	JESD22-A118	130°C, 85% RH, No bias	77	96 hours	Pass
Temperature Cycle (TC)	JESD22-A104	–55°C to 125°C air-to-air	77	300 cycles	Pass
				500 cycles	Pass
				1000 cycles	Pass
				1500 cycles	Pass
				2000 cycles	Pass
High Temperature Storage Life (HTSL)	JESD22-A103	TA=+150°C	77	500 hours	Pass
				1000 hours	Pass
				1500 cycles	Pass
				2000 cycles	Pass
Thermal Shock (TS)	JESD22-A106	–55°C to 125°C liquid-to-liquid	77	300 cycles	Pass
				500 cycles	Pass
Moisture Sensitivity Level (MSL)	JESD22-A113	Level 3 (30°C, 85% RH)	308	192 hours	Pass

Note: This is a turn-key module and qualification for this device was completed by the module partner.

Downloaded from Arrow.com.

8. Ordering Information

Table 13. Ordering Information

Part Number	Package	Description	Ambient Operating Temperature
CYW20732YB3ISLGH (T) **Note:** T represents Tape and Reel.	27-pin 27-LGA (3.5 mm × 3.2 mm x 1.0 mm) package	Bluetooth Low Energy SiP Module	–55°C to +125°C°

Downloaded from Arrow.com.

Document History Page

Document Title: CYW20732Y Bluetooth Low Energy SiP Module Document Number: 002-14838				
Revision	**ECN**	**Orig. of Change**	**Submission Date**	**Description of Change**
**	-	-	06/10/2015	20732Y-DS100-R Initial release
*A	-	-	03/07/2016	20732Y-DS101-R **Updated:** • "Features" on cover page. • Table5. "Current Consumption" **Added:** • "Features" on cover page. • "SiP Module Tray". • "Product Qualification Report". • Section 8. "Ordering Information"
*B	5484081	UTSAV	10/20/2016	Added Cypress Part Numbering Scheme and Mapping Table on Page 1. Updated to Cypress template.
*C	5962423	AESATMP9	11/09/2017	Updated logo and copyright.

Downloaded from Arrow.com.

Sales, Solutions, and Legal Information

Worldwide Sales and Design Support

Cypress maintains a worldwide network of offices, solution centers, manufacturer's representatives, and distributors. To find the office closest to you, visit us at Cypress Locations.

Products

ARM® Cortex® Microcontrollers	cypress.com/arm
Automotive	cypress.com/automotive
Clocks & Buffers	cypress.com/clocks
Interface	cypress.com/interface
Internet of Things	cypress.com/iot
Memory	cypress.com/memory
Microcontrollers	cypress.com/mcu
PSoC	cypress.com/psoc
Power Management ICs	cypress.com/pmic
Touch Sensing	cypress.com/touch
USB Controllers	cypress.com/usb
Wireless Connectivity	cypress.com/wireless

PSoC® Solutions

PSoC 1 | PSoC 3 | PSoC 4 | PSoC 5LP | PSoC 6

Cypress Developer Community

Forums | WICED IoT Forums | Projects | Video | Blogs | Training | Components

Technical Support

cypress.com/support

© Cypress Semiconductor Corporation, 2015-2017. This document is the property of Cypress Semiconductor Corporation and its subsidiaries, including Spansion LLC ("Cypress"). This document, including any software or firmware included or referenced in this document ("Software"), is owned by Cypress under the intellectual property laws and treaties of the United States and other countries worldwide. Cypress reserves all rights under such laws and treaties and does not, except as specifically stated in this paragraph, grant any license under its patents, copyrights, trademarks, or other intellectual property rights. If the Software is not accompanied by a license agreement and you do not otherwise have a written agreement with Cypress governing the use of the Software, then Cypress hereby grants you a personal, non-exclusive, nontransferable license (without the right to sublicense) (1) under its copyright rights in the Software (a) for Software provided in source code form, to modify and reproduce the Software solely for use with Cypress hardware products, only internally within your organization, and (b) to distribute the Software in binary code form externally to end users (either directly or indirectly through resellers and distributors), solely for use on Cypress hardware product units, and (2) under those claims of Cypress's patents that are infringed by the Software (as provided by Cypress, unmodified) to make, use, distribute, and import the Software solely for use with Cypress hardware products. Any other use, reproduction, modification, translation, or compilation of the Software is prohibited.

TO THE EXTENT PERMITTED BY APPLICABLE LAW, CYPRESS MAKES NO WARRANTY OF ANY KIND, EXPRESS OR IMPLIED, WITH REGARD TO THIS DOCUMENT OR ANY SOFTWARE OR ACCOMPANYING HARDWARE, INCLUDING, BUT NOT LIMITED TO, THE IMPLIED WARRANTIES OF MERCHANTABILITY AND FITNESS FOR A PARTICULAR PURPOSE. To the extent permitted by applicable law, Cypress reserves the right to make changes to this document without further notice. Cypress does not assume any liability arising out of the application or use of any product or circuit described in this document. Any information provided in this document, including any sample design information or programming code, is provided only for reference purposes. It is the responsibility of the user of this document to properly design, program, and test the functionality and safety of any application made of this information and any resulting product. Cypress products are not designed, intended, or authorized for use as critical components in systems designed or intended for the operation of weapons, weapons systems, nuclear installations, life-support devices or systems, other medical devices or systems (including resuscitation equipment and surgical implants), pollution control or hazardous substances management, or other uses where the failure of the device or system could cause personal injury, death, or property damage ("Unintended Uses"). A critical component is any component of a device or system whose failure to perform can be reasonably expected to cause the failure of the device or system, or to affect its safety or effectiveness. Cypress is not liable, in whole or in part, and you shall and hereby do release Cypress from any claim, damage, or other liability arising from or related to all Unintended Uses of Cypress products. You shall indemnify and hold Cypress harmless from and against all claims, costs, damages, and other liabilities, including claims for personal injury or death, arising from or related to any Unintended Uses of Cypress products.

Cypress, the Cypress logo, Spansion, the Spansion logo, and combinations thereof, WICED, PSoC, CapSense, EZ-USB, F-RAM, and Traveo are trademarks or registered trademarks of Cypress in the United States and other countries. For a more complete list of Cypress trademarks, visit cypress.com. Other names and brands may be claimed as property of their respective owners.

Downloaded from Arrow.com.