ON Semiconductor

Is Now

To learn more about onsemi™, please visit our website at
www.onsemi.com

onsemi and onsemi and other names, marks, and brands are registered and/or common law trademarks of Semiconductor Components Industries, LLC dba "**onsemi**" or its affiliates and/or subsidiaries in the United States and/or other countries. **onsemi** owns the rights to a number of patents, trademarks, copyrights, trade secrets, and other intellectual property. A listing of **onsemi** product/patent coverage may be accessed at www.onsemi.com/site/pdf/Patent-Marking.pdf. **onsemi** reserves the right to make changes at any time to any products or information herein, without notice. The information herein is provided "as-is" and **onsemi** makes no warranty, representation or guarantee regarding the accuracy of the information, product features, availability, functionality, or suitability of its products for any particular purpose, nor does **onsemi** assume any liability arising out of the application or use of any product or circuit, and specifically disclaims any and all liability, including without limitation special, consequential or incidental damages. Buyer is responsible for its products and applications using **onsemi** products, including compliance with all laws, regulations and safety requirements or standards, regardless of any support or applications information provided by **onsemi**. "Typical" parameters which may be provided in **onsemi** data sheets and/or specifications can and do vary in different applications and actual performance may vary over time. All operating parameters, including "Typicals" must be validated for each customer application by customer's technical experts. **onsemi** does not convey any license under any of its intellectual property rights nor the rights of others. **onsemi** products are not designed, intended, or authorized for use as a critical component in life support systems or any FDA Class 3 medical devices or medical devices with a same or similar classification in a foreign jurisdiction or any devices intended for implantation in the human body. Should Buyer purchase or use **onsemi** products for any such unintended or unauthorized application, Buyer shall indemnify and hold **onsemi** and its officers, employees, subsidiaries, affiliates, and distributors harmless against all claims, costs, damages, and expenses, and reasonable attorney fees arising out of, directly or indirectly, any claim of personal injury or death associated with such unintended or unauthorized use, even if such claim alleges that **onsemi** was negligent regarding the design or manufacture of the part. **onsemi** is an Equal Opportunity/Affirmative Action Employer. This literature is subject to all applicable copyright laws and is not for resale in any manner. Other names and brands may be claimed as the property of others.

Downloaded from Arrow.com.

ON Semiconductor®

FQB8N60C / FQI8N60C

N-Channel QFET® MOSFET

600 V, 7.5 A, 1.2 Ω

Description

This N-Channel enhancement mode power MOSFET is produced using ON Semiconductor's proprietary planar stripe and DMOS technology. This advanced MOSFET technology has been especially tailored to reduce on-state resistance, and to provide superior switching performance and high avalanche energy strength. These devices are suitable for switched mode power supplies, active power factor correction (PFC), and electronic lamp ballasts.

Features

- 7.5 A, 600 V, $R_{DS(on)}$ = 1.2 Ω (Max.) @ V_{GS} = 10 V, I_D = 3.75 A
- Low Gate Charge (Typ. 28 nC)
- Low Crss (Typ. 12 pF)
- 100% Avalanche Tested
- RoHS Compliant

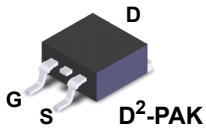

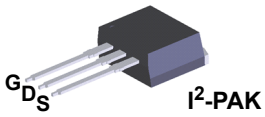

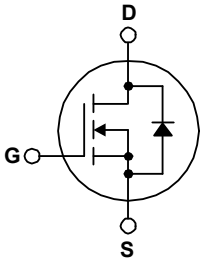

Absolute Maximum Ratings

T_C = 25°C unless otherwise noted.

Symbol	Parameter		FQB8N60CTM / FQI8N60CTU	Unit
V_{DSS}	Drain-Source Voltage		600	V
I_D	Drain Current - Continuous (T_C = 25°C)		7.5	A
	- Continuous (T_C = 100°C)		4.6	A
I_{DM}	Drain Current - Pulsed	(Note 1)	30	A
V_{GSS}	Gate-Source Voltage		± 30	V
E_{AS}	Single Pulsed Avalanche Energy	(Note 2)	230	mJ
I_{AR}	Avalanche Current	(Note 1)	7.5	A
E_{AR}	Repetitive Avalanche Energy	(Note 1)	14.7	mJ
dv/dt	Peak Diode Recovery dv/dt	(Note 3)	4.5	V/ns
P_D	Power Dissipation (T_A = 25°C)*		3.13	W
	Power Dissipation (T_C = 25°C)		147	W
	- Derate above 25°C		1.18	W/°C
T_J, T_{STG}	Operating and Storage Temperature Range		-55 to +150	°C
T_L	Maximum Lead Temperature for Soldering, 1/8" from Case for 5 Seconds.		300	°C

Thermal Characteristics

Symbol	Parameter	FQB8N60CTM / FQI8N60CTU	Unit
$R_{\theta JC}$	Thermal Resistance, Junction to Case, Max.	0.85	°C/W
$R_{\theta JA}$	Thermal Resistance, Junction to Ambient (Minimum Pad of 2-oz Copper), Max.	62.5	
	Thermal Resistance, Junction to Ambient (*1 in² Pad of 2-oz Copper), Max.	40	

©2003 Semiconductor Components Industries, LLC.
October-2017,Rev.3

Publication Order Number:
FQI8N60C/D

Downloaded from Arrow.com.

Package Marking and Ordering Information

Part Number	Top Mark	Package	Packing Method	Reel Size	Tape Width	Quantity
FQB8N60CTM	FQB8N60C	D^2-PAK	Tape and Reel	330 mm	24 mm	800 units
FQI8N60CTU	FQI8N60C	I^2-PAK	Tube	N/A	N/A	50 units

Electrical Characteristics

T_C = 25°C unless otherwise noted.

Symbol	Parameter	Test Conditions	Min.	Typ.	Max.	Unit
Off Characteristics						
BV_{DSS}	Drain-Source Breakdown Voltage	V_{GS} = 0 V, I_D = 250 μA	600	--	--	V
ΔBV_{DSS} / ΔT_J	Breakdown Voltage Temperature Coefficient	I_D = 250 μA, Referenced to 25°C	--	0.7	--	V/°C
I_{DSS}	Zero Gate Voltage Drain Current	V_{DS} = 600 V, V_{GS} = 0 V	--	--	1	μA
		V_{DS} = 480 V, T_C = 125°C	--	--	10	μA
I_{GSSF}	Gate-Body Leakage Current, Forward	V_{GS} = 30 V, V_{DS} = 0 V	--	--	100	nA
I_{GSSR}	Gate-Body Leakage Current, Reverse	V_{GS} = -30 V, V_{DS} = 0 V	--	--	-100	nA
On Characteristics						
$V_{GS(th)}$	Gate Threshold Voltage	V_{DS} = V_{GS}, I_D = 250 μA	2.0	--	4.0	V
$R_{DS(on)}$	Static Drain-Source On-Resistance	V_{GS} = 10 V, I_D = 3.75 A	--	1.0	1.2	Ω
g_{FS}	Forward Transconductance	V_{DS} = 40 V, I_D = 3.75 A	--	8.7	--	S
Dynamic Characteristics						
C_{iss}	Input Capacitance	V_{DS} = 25 V, V_{GS} = 0 V, f = 1.0 MHz	--	965	1255	pF
C_{oss}	Output Capacitance		--	105	135	pF
C_{rss}	Reverse Transfer Capacitance		--	12	16	pF
Switching Characteristics						
$t_{d(on)}$	Turn-On Delay Time	V_{DD} = 300 V, I_D = 7.5A, R_G = 25 Ω (Note 4)	--	16.5	45	ns
t_r	Turn-On Rise Time		--	60.5	130	ns
$t_{d(off)}$	Turn-Off Delay Time		--	81	170	ns
t_f	Turn-Off Fall Time		--	64.5	140	ns
Q_g	Total Gate Charge	V_{DS} = 480 V, I_D = 7.5A, V_{GS} = 10 V (Note 4)	--	28	36	nC
Q_{gs}	Gate-Source Charge		--	4.5	--	nC
Q_{gd}	Gate-Drain Charge		--	12	--	nC
Drain-Source Diode Characteristics and Maximum Ratings						
I_S	Maximum Continuous Drain-Source Diode Forward Current		--	--	7.5	A
I_{SM}	Maximum Pulsed Drain-Source Diode Forward Current		--	--	30	A
V_{SD}	Drain-Source Diode Forward Voltage	V_{GS} = 0 V, I_S = 7.5 A	--	--	1.4	V
t_{rr}	Reverse Recovery Time	V_{GS} = 0 V, I_S = 7.5 A, dI_F / dt = 100 A/μs	--	365	--	ns
Q_{rr}	Reverse Recovery Charge		--	3.4	--	μC

Notes:
1. Repetitive rating : pulse-width limited by maximum junction temperature.
2. L = 7.3 mH, I_{AS} = 7.5 A, V_{DD} = 50 V, R_G = 25 Ω, starting T_J = 25°C.
3. $I_{SD} \leq$ 7.5 A, di/dt ≤ 200 A/μs , $V_{DD} \leq BV_{DSS}$, starting T_J = 25°C.
4. Essentially independent of operating temperature.

Downloaded from Arrow.com.

Typical Characteristics

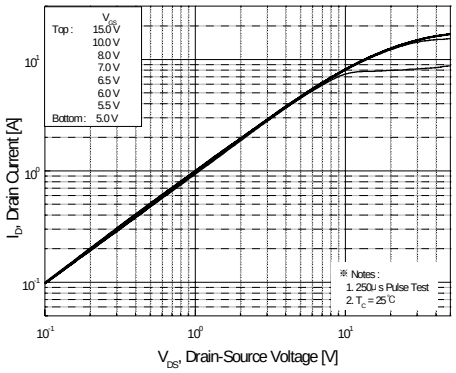

Figure 1. On-Region Characteristics

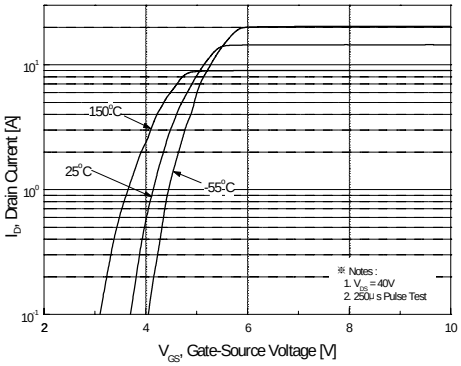

Figure 2. Transfer Characteristics

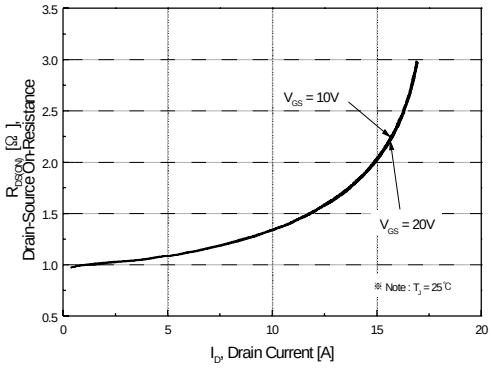

Figure 3. On-Resistance Variation vs Drain Current and Gate Voltage

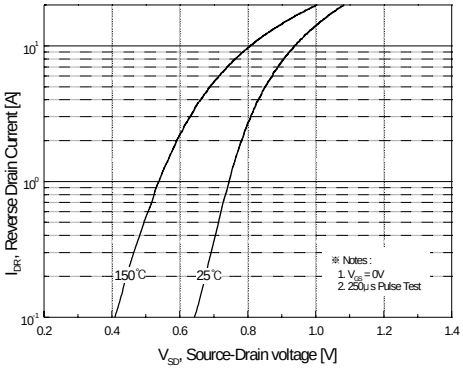

Figure 4. Body Diode Forward Voltage Variation with Source Current and Temperature

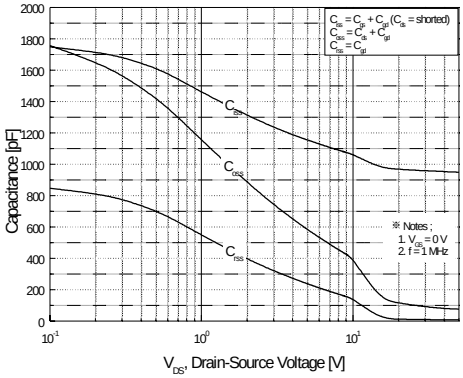

Figure 5. Capacitance Characteristics

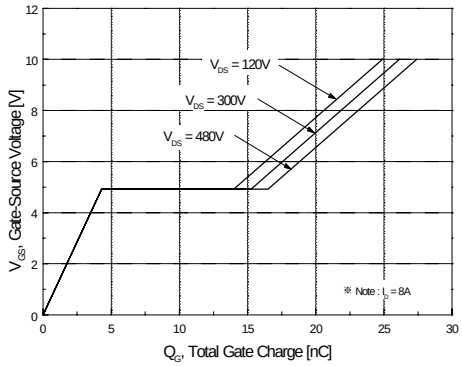

Figure 6. Gate Charge Characteristics

Downloaded from Arrow.com.

Typical Characteristics (Continued)

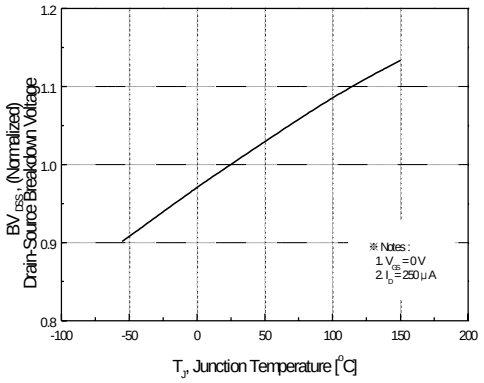

Figure 7. Breakdown Voltage Variation vs Temperature

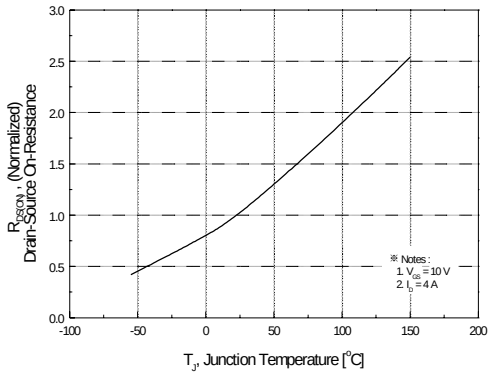

Figure 8. On-Resistance Variation vs Temperature

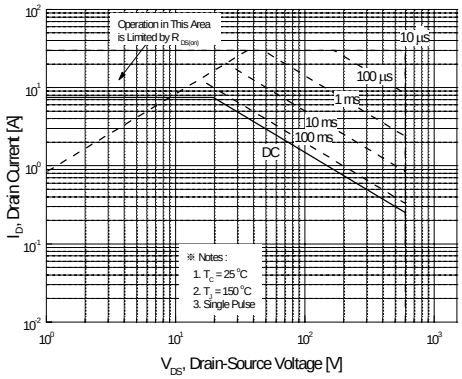

Figure 9. Maximum Safe Operating Area

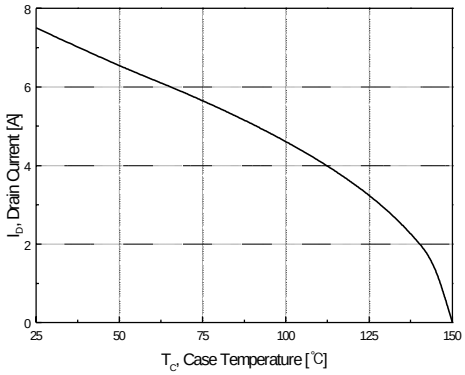

Figure 10. Maximum Drain Current vs Case Temperature

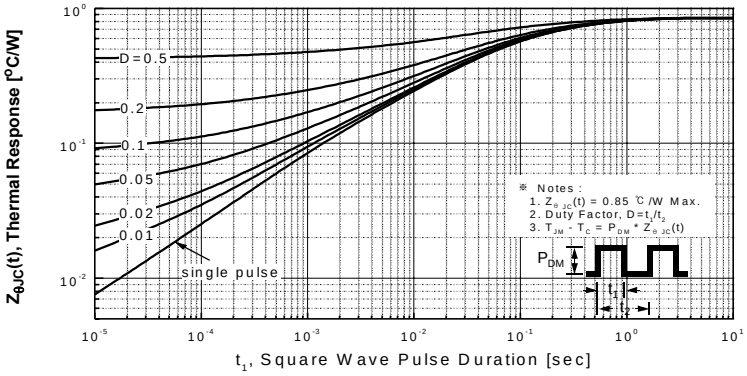

Figure 11. Transient Thermal Response Curve

Downloaded from Arrow.com.

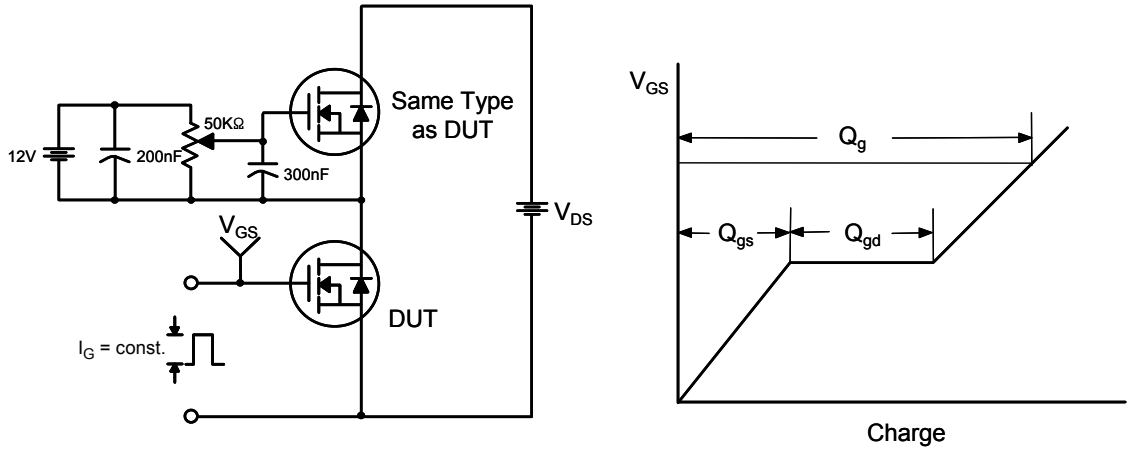

Figure 12. Gate Charge Test Circuit & Waveform

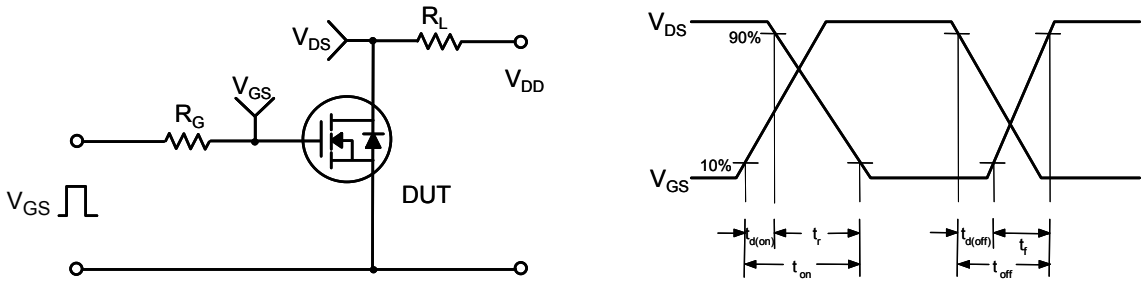

Figure 13. Resistive Switching Test Circuit & Waveforms

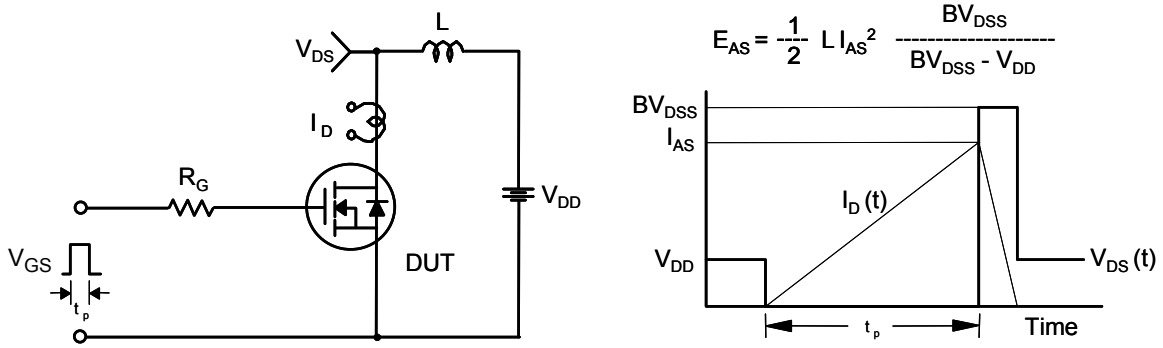

Figure 14. Unclamped Inductive Switching Test Circuit & Waveforms

Downloaded from Arrow.com.

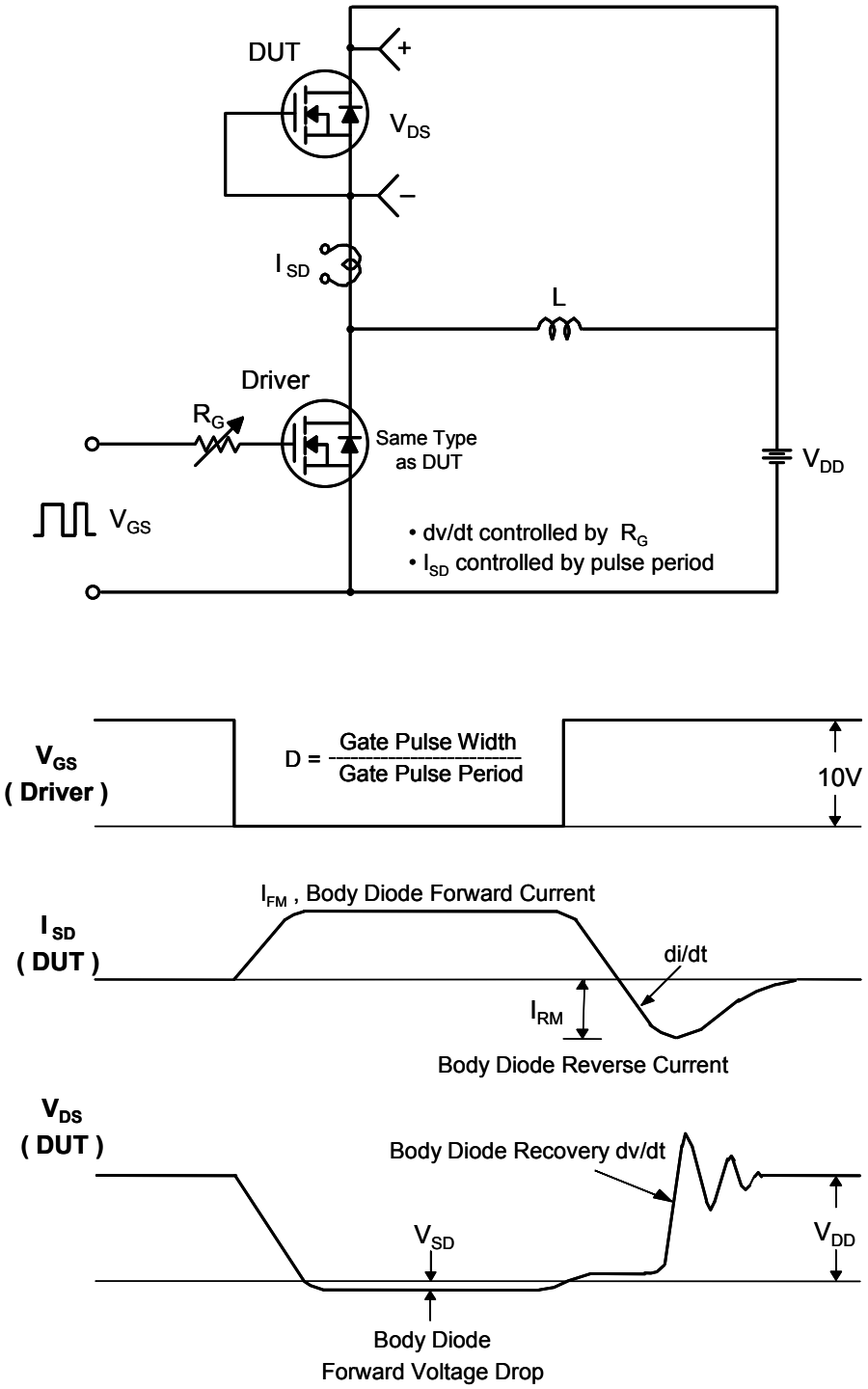

Figure 15. Peak Diode Recovery dv/dt Test Circuit & Waveforms

Downloaded from Arrow.com.

Mechanical Dimensions

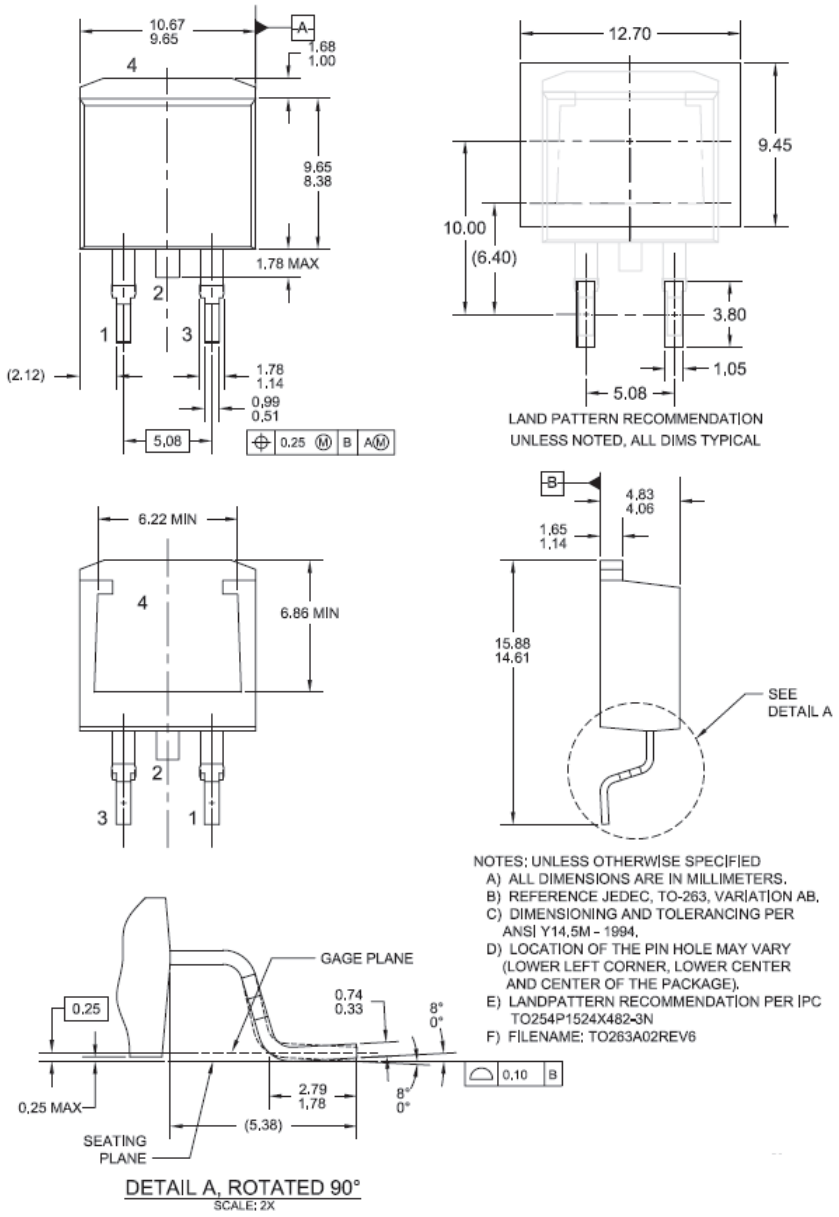

Figure 16. TO263 (D^2PAK), Molded, 2-Lead, Surface Mount

Package drawings are provided as a service to customers considering ON Semiconductor components. Drawings may change in any manner without notice. Please note the revision and/or date on the drawing and contact a ON Semiconductor representative to verify or obtain the most recent revision. Package specifications do not expand the terms of ON Semiconductor's worldwide terms and conditions, specif-ically the warranty therein, which covers ON Semiconductor products.

Downloaded from Arrow.com.

Mechanical Dimensions

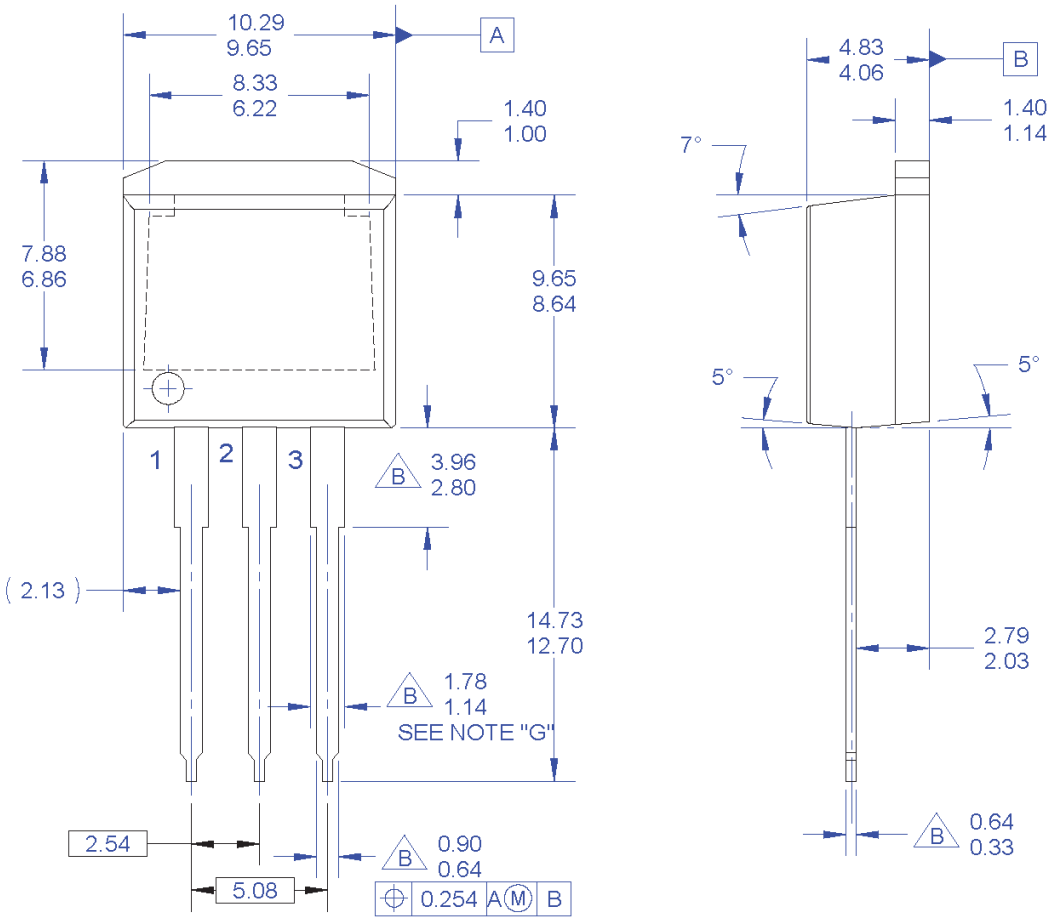

NOTES:

A. EXCEPT WHERE NOTED CONFORMS TO TO262 JEDEC VARIATION AA.
B. DOES NOT COMPLY JEDEC STD. VALUE.
C. ALL DIMENSIONS ARE IN MILLIMETERS.
D. DIMENSIONS ARE EXCLUSIVE OF BURRS, MOLD FLASH AND TIE BAR PROTRUSIONS.
E. DIMENSION AND TOLERANCE AS PER ANSI Y14.5-1994.
F. LOCATION OF PIN HOLE MAY VARY (LOWER LEFT CORNER, LOWER CENTER AND CENTER OF PACKAGE)
G. MAXIMUM WIDTH FOR F102 DEVICE = 1.35 MAX.
H. DRAWING FILE NAME: TO262A03REV5

Figure 17. TO262 (I^2PAK), Molded, 3-Lead, Jedec Variation AA

Package drawings are provided as a service to customers considering ON Semiconductor components. Drawings may change in any manner without notice. Please note the revision and/or date on the drawing and contact a ON Semiconductor representative to verify or obtain the most recent revision. Package specifications do not expand the terms of ON Semiconductor's worldwide terms and conditions, specif-ically the warranty therein, which covers ON Semiconductor products.

Downloaded from Arrow.com.

ON Semiconductor and ON are trademarks of Semiconductor Components Industries, LLC dba ON Semiconductor or its subsidiaries in the United States and/or other countries. ON Semiconductor owns the rights to a number of patents, trademarks, copyrights, trade secrets, and other intellectual property. A listing of ON Semiconductor's product/patent coverage may be accessed at www.onsemi.com/site/pdf/Patent−Marking.pdf. ON Semiconductor reserves the right to make changes without further notice to any products herein. ON Semiconductor makes no warranty, representation or guarantee regarding the suitability of its products for any particular purpose, nor does ON Semiconductor assume any liability arising out of the application or use of any product or circuit, and specifically disclaims any and all liability, including without limitation special, consequential or incidental damages. Buyer is responsible for its products and applications using ON Semiconductor products, including compliance with all laws, regulations and safety requirements or standards, regardless of any support or applications information provided by ON Semiconductor. "Typical" parameters which may be provided in ON Semiconductor data sheets and/or specifications can and do vary in different applications and actual performance may vary over time. All operating parameters, including "Typicals" must be validated for each customer application by customer's technical experts. ON Semiconductor does not convey any license under its patent rights nor the rights of others. ON Semiconductor products are not designed, intended, or authorized for use as a critical component in life support systems or any FDA Class 3 medical devices or medical devices with a same or similar classification in a foreign jurisdiction or any devices intended for implantation in the human body. Should Buyer purchase or use ON Semiconductor products for any such unintended or unauthorized application, Buyer shall indemnify and hold ON Semiconductor and its officers, employees, subsidiaries, affiliates, and distributors harmless against all claims, costs, damages, and expenses, and reasonable attorney fees arising out of, directly or indirectly, any claim of personal injury or death associated with such unintended or unauthorized use, even if such claim alleges that ON Semiconductor was negligent regarding the design or manufacture of the part. ON Semiconductor is an Equal Opportunity/Affirmative Action Employer. This literature is subject to all applicable copyright laws and is not for resale in any manner.

PUBLICATION ORDERING INFORMATION

LITERATURE FULFILLMENT:
Literature Distribution Center for ON Semiconductor
19521 E. 32nd Pkwy, Aurora, Colorado 80011 USA
Phone: 303−675−2175 or 800−344−3860 Toll Free USA/Canada
Fax: 303−675−2176 or 800−344−3867 Toll Free USA/Canada
Email: orderlit@onsemi.com

N. American Technical Support: 800−282−9855 Toll Free USA/Canada
Europe, Middle East and Africa Technical Support:
Phone: 421 33 790 2910
Japan Customer Focus Center
Phone: 81−3−5817−1050

ON Semiconductor Website: **www.onsemi.com**

Order Literature: http://www.onsemi.com/orderlit

For additional information, please contact your local Sales Representative

Downloaded from Arrow.com.