THCV217 / THCV218 Evaluation Kit

V-by-One®HS Dual Link Evaluation Board

Parts Number: THEVA217-V2, THEVA218-V2

Overview

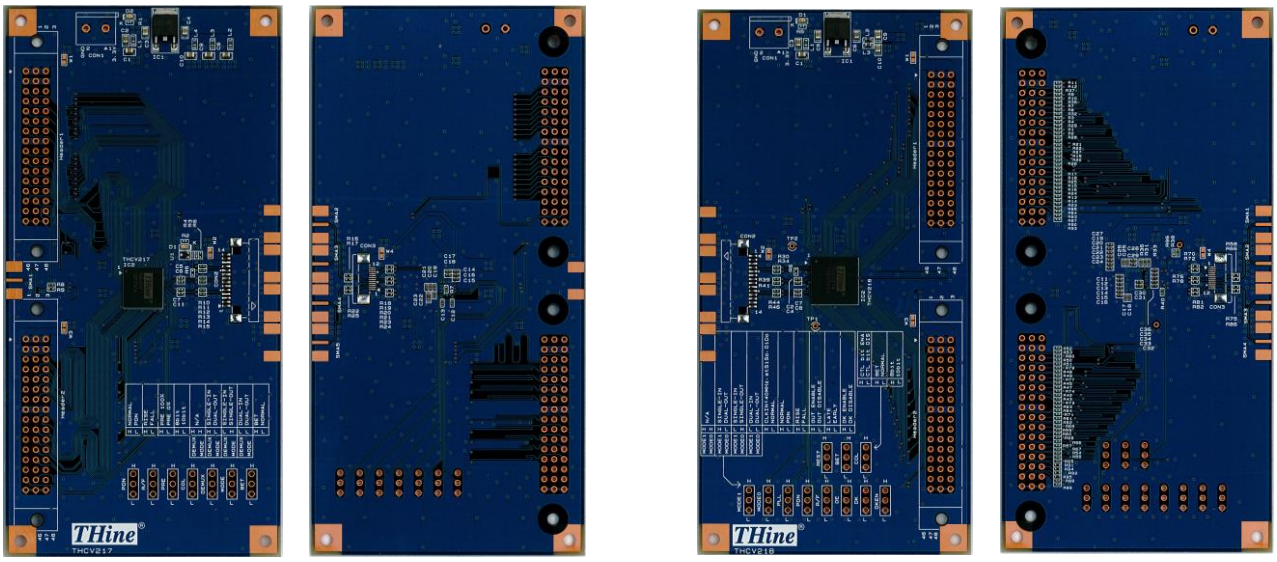

(a) THEVA217-V2 (Top / Bottom Side)

(b) THEVA218-V2 (Top / Bottom Side)

Figure 1 THEVA217-V2 and THEVA218-V2 Top / Bottom Side View

Copyright(C) 2023 THine Electronics, Inc.

Downloaded from Arrow.com.

Power Supply Setup

This chapter shows power supply condition.

Caution: Please check if there is no power-GND short on below red trace before supplying any power.

3.3V Power Supply to Each Board

Each evaluation board requires 3.3V power supply. Please use "CON1" connector typically.

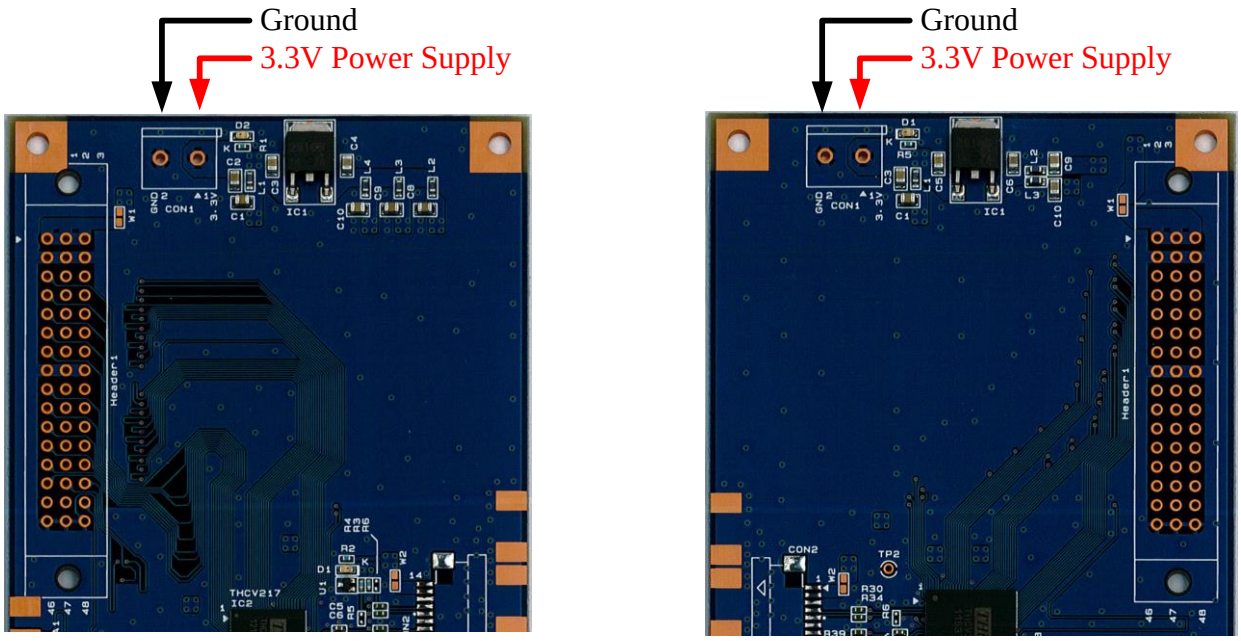

(a)THEVA217-V2 (b)THEVA218-V2

Figure 2 Power Supply for Evaluation Board

Power Supply from / to Connector

3.3V power supply can be connected to Header1 and CON2 by using W1, W2 and W4solder jumper.

THEVA217-V2

W1: Connect the 3.3V power supply with pin#1, 2 and 3 of Header1.
W2: Connect the 3.3V power supply with pin#13 and 14 of CON2.
W4: Connect the 3.3V power supply with pin#11 and 12 of CON3.

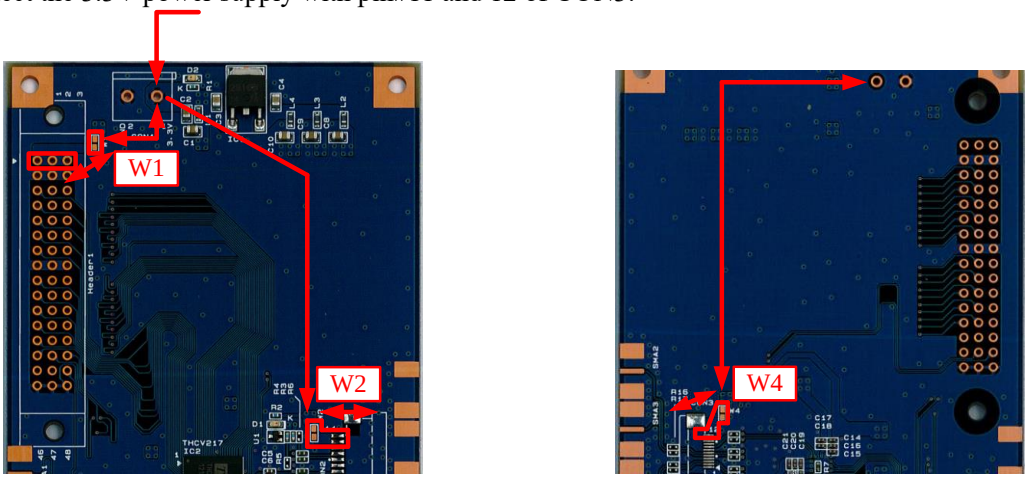

(a)THEVA217-V2 (Top Side) (b) THEVA217-V2 (Bottom Side)

Figure 3 THEVA217-V2 Power Supply from / to Each Connector

Copyright(C) 2023 THine Electronics, Inc.

Downloaded from Arrow.com.

THEVA218-V2

W1: Connect the 3.3V power supply with pin#1, 2 and 3 of Header1.
W2: Connect the 3.3V power supply with pin#1 and 2 of CON2.
W4: Connect the 3.3V power supply with pin#1 and 2 of CON3.

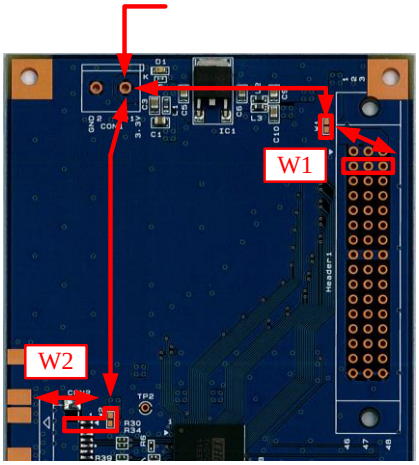

(a)THEVA218-V2 (Top Side)

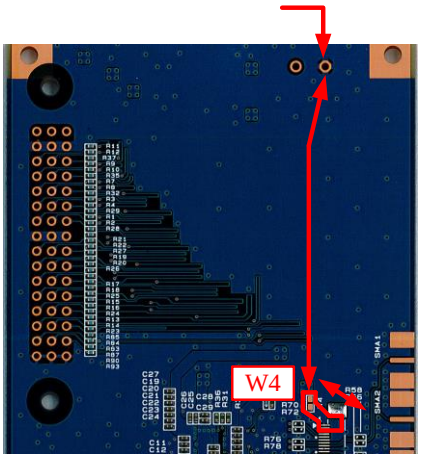

(b)THEVA218-V2 (Bottom Side)

Figure 4 THEVA218-V2 Power Supply from / to Each Connector

Status Indicate LED

The following table shows indicating status of each LED.

Table 1

	THEVA217-V2	THEVA218-V2
D1	LOCKN Status Indicator	3.3V Power Supply Indicator
D2	3.3V Power Supply Indicator	

Copyright(C) 2023 THine Electronics, Inc.

Downloaded from Arrow.com.

V-by-One®HS Input / Output Connector Select

V-by-One®HS input / output connector can be selected by using 0ohm resistors.

(1) 1mm Pitch Connector (Default Setting)

Please mount / unmount following 0ohm resistors to use 1mm pitch connector.

Table 2

	Mount	Unmount
THEVA217-V2	R10, R11, R12, R13, R14, R15	R18, R19, R20, R21, R23, R24
THEVA218-V2	R30, R34, R39, R41, R44, R46	R70, R72, R76, R78, R81, R82

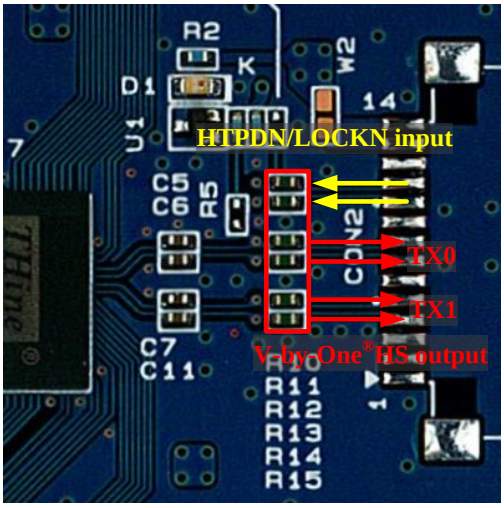

(a)THEVA217-V2 (Top Side)

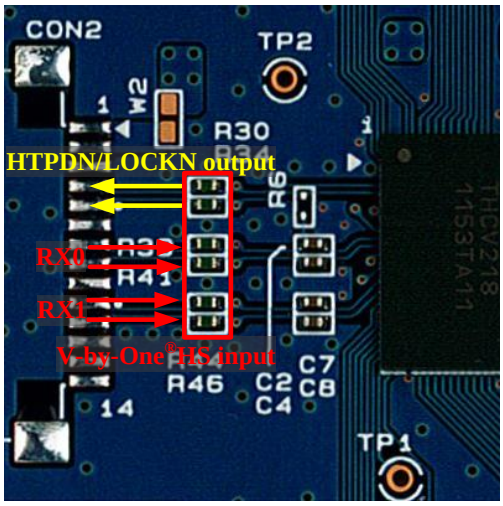

(b)THEVA218-V2 (Top Side)

Figure 5 Resistor Mounting for 1mm Pitch Connector

Copyright(C) 2023 THine Electronics, Inc.

Downloaded from Arrow.com.

(2) 0.5mm Pitch Connector

Please mount / unmount following 0ohm resistors to use 0.5mm pitch connector.

Table 3

	Mount	Unmount
THEVA217-V2	R18, R19, R20, R21, R23, R24	R10, R11, R12, R13, R14, R15
THEVA218-V2	R70, R72, R76, R78, R81, R82	R30, R34, R39, R41, R44, R46

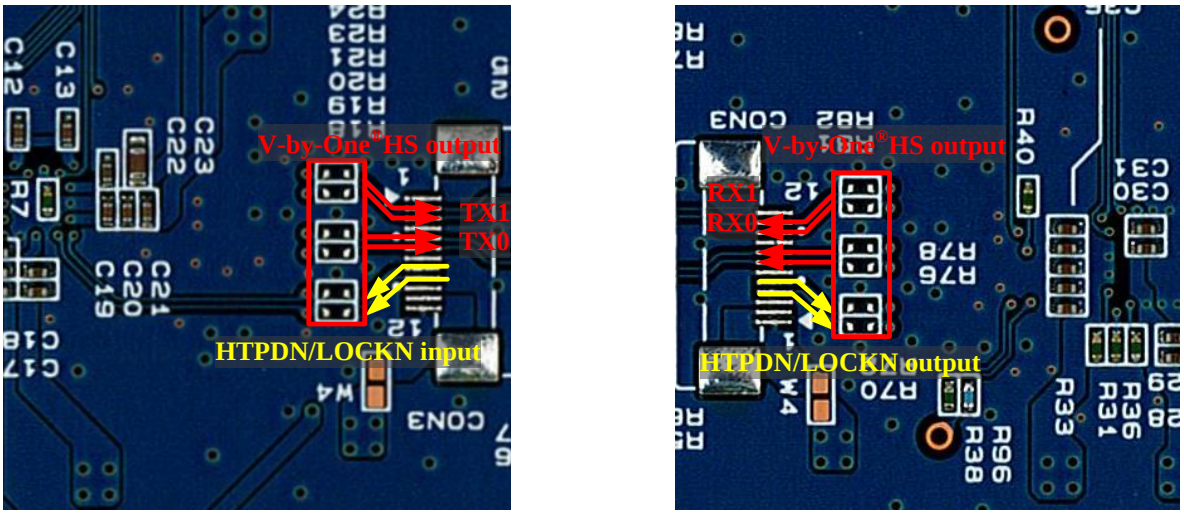

(a)THEVA217-V2 (Bottom Side) (b)THEVA218-V2 (Bottom Side)

Figure 6 Resistor Mounting for 0.5mm Pitch Connector

(3) SMA Connector

Please mount / unmount following 0ohm resistors to use SMA connector.

*HTPDN and LOCKN signals don't have SMA connector input / output connection.

Table 4

	Mount	Unmount
THEVA217-V2	R16, R17, R22, R25 R18, R19, R20, R21, R23, R24	R10, R11, R12, R13, R14, R15
THEVA218-V2	R58, R66, R75, R86 R70, R72, R76, R78, R81, R82	R30, R34, R39, R41, R44, R46

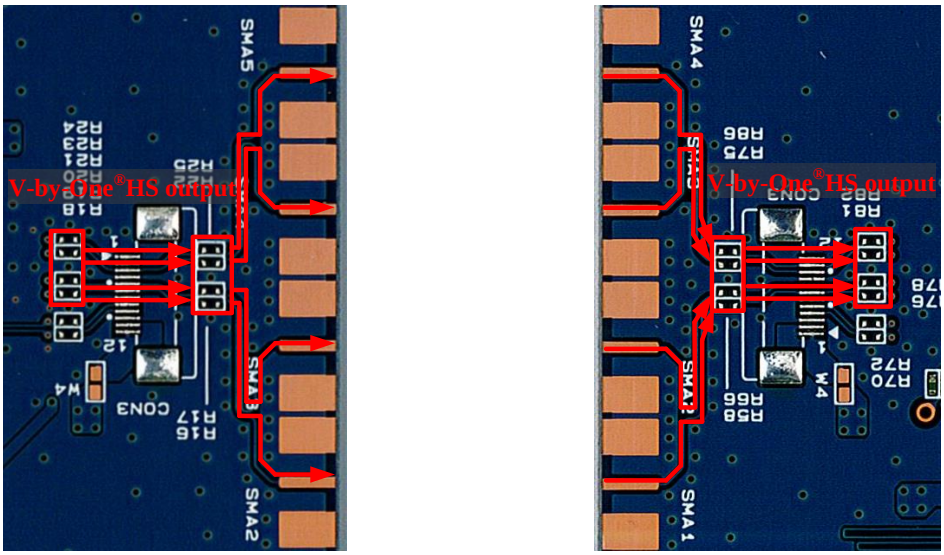

(a)THEVA217-V2 (Bottom Side) (b)THEVA218-V2 (Bottom Side)

Figure 7 Resistor Mounting for SMA Connector

Copyright(C) 2023 THine Electronics, Inc.

Downloaded from Arrow.com.

Function Setting

Setting pin of each board is shown in yellow area of figure9. Pin#2 of each 3HEADER is connected to IC's setting pin.
Each setting pin's high or low setting can set by connecting pin#2 of 3HEADER and high level or low level.

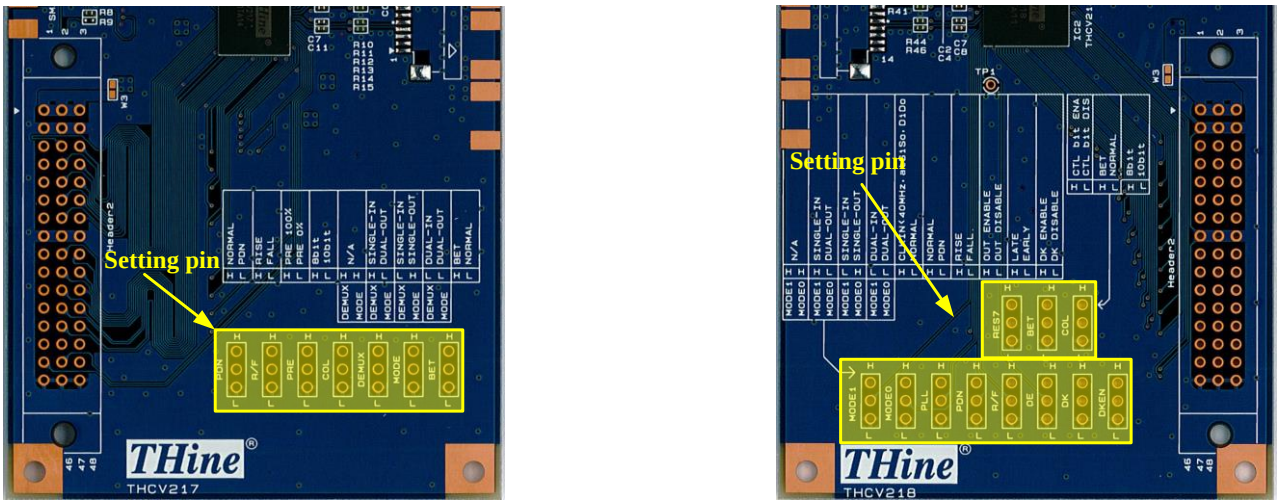

Figure 8 Position of Function Setting Pin

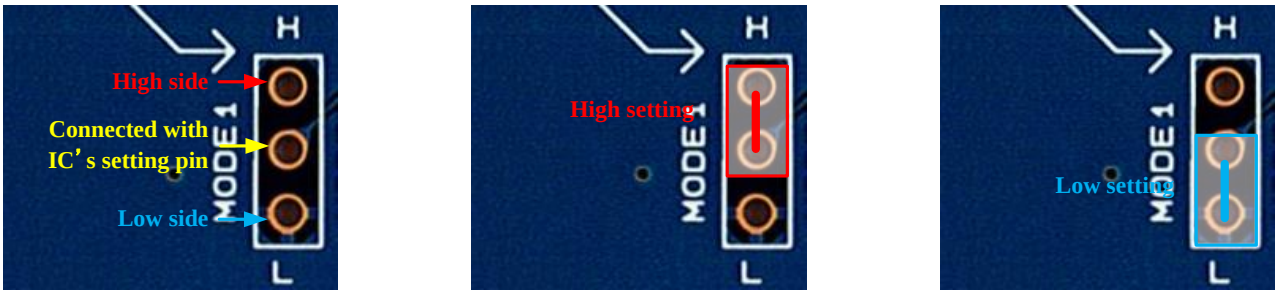

(a)3HEADER description (b)High level setting (c)Low level setting

Figure 9 High / Low Setting Description

Clock Input from SMA Connector

THEVA217-V2 can also choose the TTL clock input from SMA connector by using 0ohm resistor.
If you want to use SMA connector for clock input, please change the 0ohm resistor mount from R8 to R9.

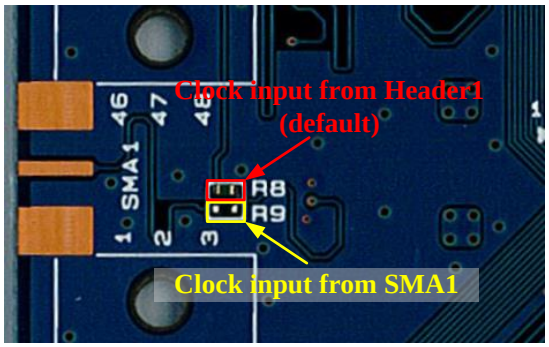

Figure 10 TTL Clock Input Connector Select

Copyright(C) 2023 THine Electronics, Inc.

Downloaded from Arrow.com.

LOCKN Sharing and HTPDN Omission

LOCK Sharing

LOCKN connection can be shared with V-by-One®HS trace. When you share the LOCKN signal, Please mount 1k ohm resistors to share the LOCKN signal, and unmount the 0ohm resistors shown in Figure 11.

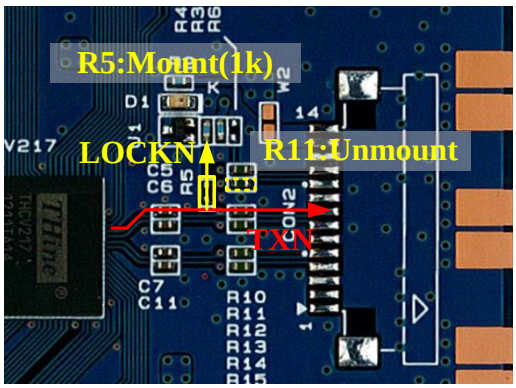

(a)THEVA217-V2 (Top Side)

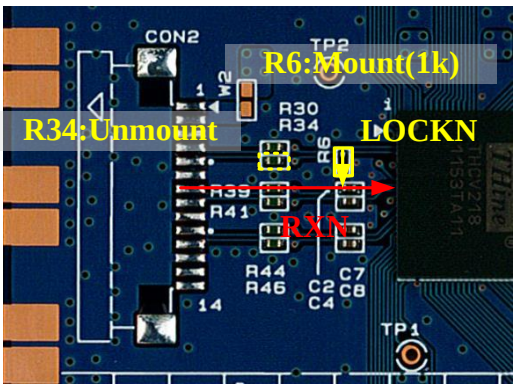

(b)THEVA218-V2 (Top Side)

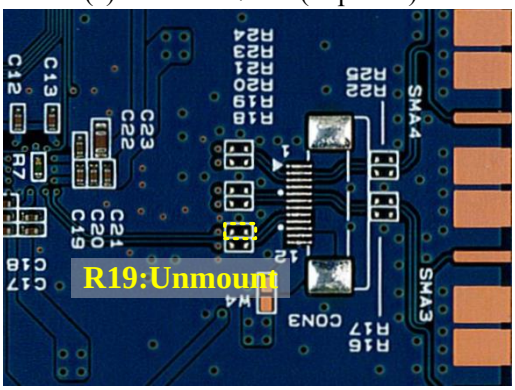

(c) THEVA217-V2 (Bottom Side)

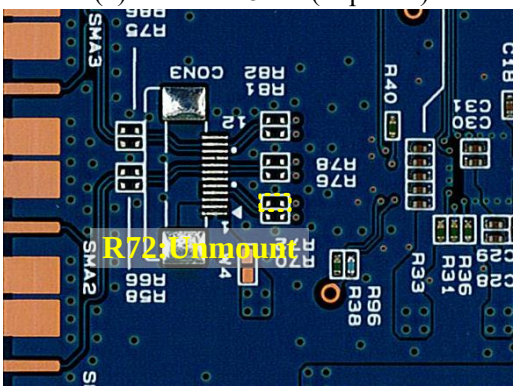

(d) THEVA218-V2 (Bottom Side)

Figure 11 LOCKN Sharing

Copyright(C) 2023 THine Electronics, Inc.

Downloaded from Arrow.com.

HTPDN Signal Omission

HTPDN signal can be omitted by using 1k ohm resistor. When you omit the HTPDN signal, Please mount 1k ohm resistors to pull down the HTPDN signal at transmitter side, and unmount the 0ohm resistors shown in Figure 12. When the HTPDN omission using, HTPDN output from receiver side is open connection.

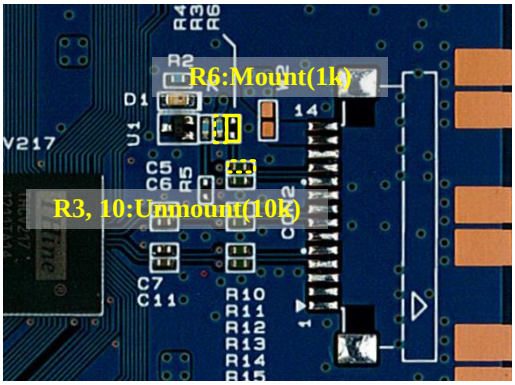

(a)THEVA217-V2 (Top Side)

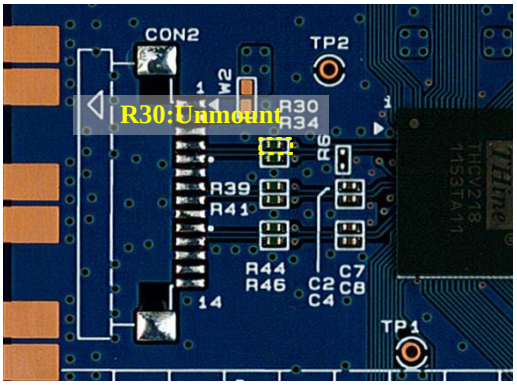

(b)THEVA218-V2 (Top Side)

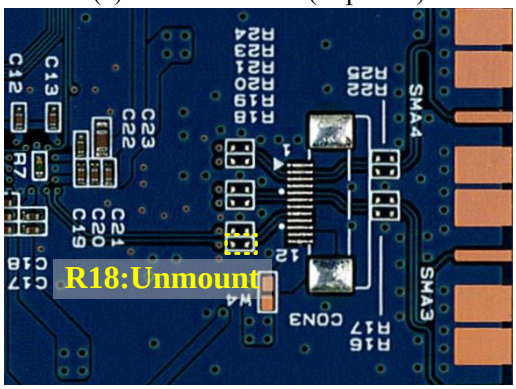

(c)THEVA217-V2 (Bottom Side)

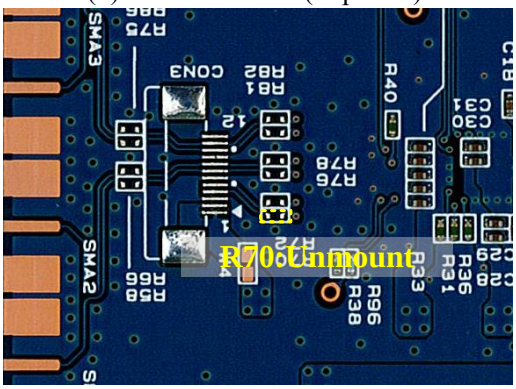

(d)THEVA218-V2 (Bottom Side)

Figure 12 HTPDN Signal Omission

Copyright(C) 2023 THine Electronics, Inc.

Downloaded from Arrow.com.

Function setting terminals

Table 5 THEVA217-V2 Function Setting Description

THEVA217 Silk	THCV217 Pin Name	Function
PDN	PDN	Power down input. H: Normal Operation L: Power Down
R/F	R/F	Input clock triggering edge select input for latching input data H : Rising Edge L : Falling Edge
PRE	PRE	Pre emphasis level select input H: 100% L: 0%
COL	COL	Color depth select input H : 8bit Mode L : 10bit Mode
DEMUX, MODE	DEMUX, MODE	Operation mode Select input DEMUX, MODE=HH : Reserved (Forbidden) HL : Single-In / Dual-Out LH : Single-In / Single-Out LL : Dual-In / Dual-Out
BET	Reserved1	Must be set to Low.

Note that the items indicated in red are different from the silk notation and the connected terminal names.

Copyright(C) 2023 THine Electronics, Inc.

Downloaded from Arrow.com.

Table 6 THEVA218-V2 Function Setting Description

THEVA218 Silk	THCV218 Pin Name	Function
MODE1, MODE0	MODE1, MODE0	Operation mode Select input HH : Reserved (Forbidden) HL : Single-In / Single-Out LH : Dual-In / Single-Out LL : Dual-In / Dual-Out
PLL	PLL	PLL Bandwidth select H: CLKIN<40MHz, when SiSo, DiDo L: Normal Operation
PDN	PDN	Power down input. H: Normal Operation L: Power Down Mode
R/F	R/F	Input clock triggering edge select input for latching input data H : Rising Edge L : Falling Edge
OE	OE	Output enable input H : All CMOS Outputs Enabled L : All CMOS Outputs Disabled, except for LOCKN, HTPDN
DK	DK	Output clock delay timing select input. Enabled by DKEN H : Late L : Early
DKEN	DKEN	DK enable H: DK Enabled L: DK Disabled (Default)
RES7	CTLEN	CTL bit transmission on DE=low blanking period enable H : CTL Bit Enabled (CTL are transmitted except the 1st and the last pixel of DE=low) L : CTL Bit Disabled (CTL are low fixed during DE=low)
BET	Reserved7	Must be set to Low.
COL	COL	Color depth select input H : 8bit Mode L : 10bit Mode

Note that the items indicated in red are different from the silk notation and the connected terminal names.

Copyright(C) 2023 THine Electronics, Inc.

Downloaded from Arrow.com.

Schematic

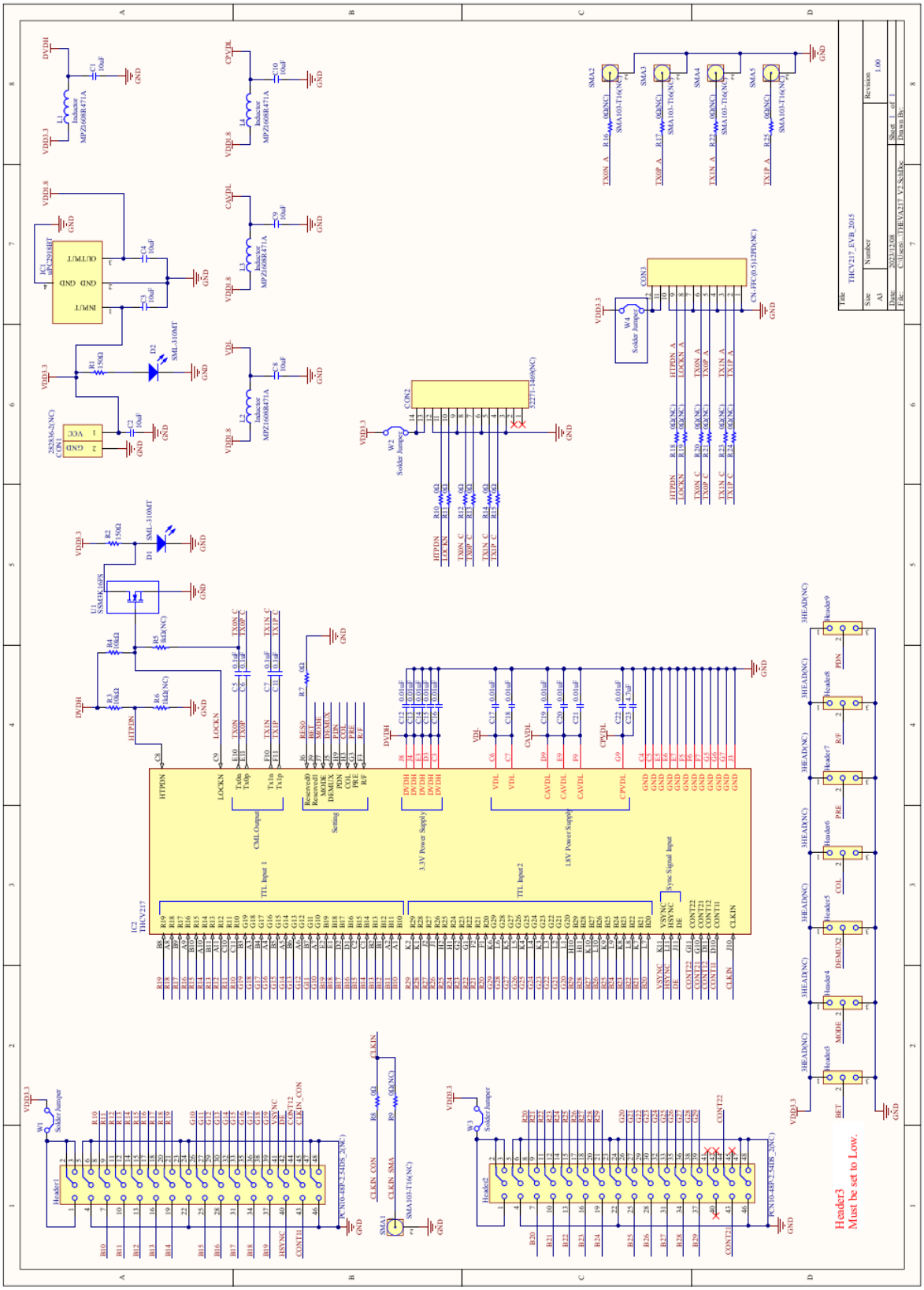

Figure 13 THEVA217-V2 schematic

Copyright(C) 2023 THine Electronics, Inc.

Downloaded from Arrow.com.

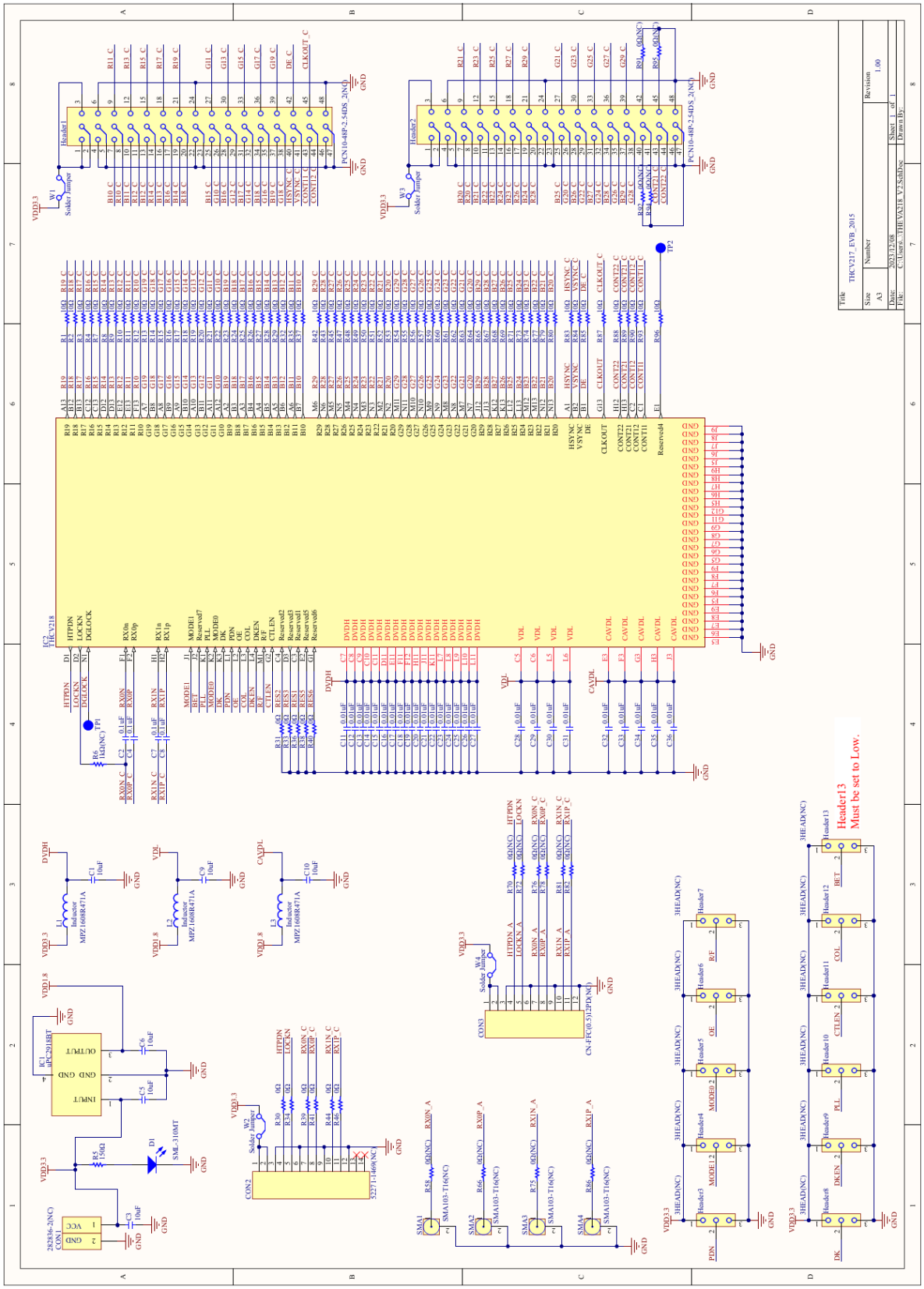

Figure 14 THEVA218-V2 schematic

Copyright(C) 2023 THine Electronics, Inc.

Downloaded from Arrow.com.

Bills of Materials

Table 7 THEVA217-V2 BOM

TYPE	Value / Part No.	Package	SPEC	Reference No.	Q'ty	Note
Capacitor	10uF	2012	16V	C1, C2, C3, C4, C8, C9, C10	7	
Capacitor	4.7uF	1608	16V	C23	1	
Capacitor	0.1uF	1005	16V	C5, C6, C7, C11	4	
Capacitor	0.01uF	1005	16V	C12, C13, C14, C15, C16, C17, C18, C19, C20, C21, C22	11	
Connector	SMA103-T16(NC)	1.6mm	PCB End Jack	SMA1, SMA2, SMA3, SMA4, SMA5	5	
Connector	PCN10-48P-2.54DSA_LEFT(NC)	2.54mm_pitch	48pin	Header1, Header2	2	
Connector	CN-FFC(0.5)12PD(NC)	0.5mm_pitch	12pin	CON3	1	
Connector	52271-1469(NC)	1mm_pitch	14pin	CON2	1	
Connector	282836-2(NC)	5mm_pitch	2pin	CON1	1	
Header	3HEAD(NC)	2.54mm_pitch	---	Header3, Header4, Header5, Header6, Header7, Header8, Header9	7	
IC	SSM3K16FS	SSM	RON15Ω	U1	1	
IC	THCV217	TFBGA105	THCV217	IC2	1	
IC	uPC2918BT	SC-63	1A	IC1	1	
Inductor	MPZ1608R471A	1608	1.2A	L1, L2, L3, L4	4	
LED0	SML-310MT	1608	GREEN	D1, D2	2	
Resistor	150Ω	1005	0.1W	R1, R2	2	
Resistor	10kΩ	1005	0.1W	R3, R4	2	
Resistor	1kΩ(NC)	1005	0.1W	R5, R6	2	
Resistor	0Ω(NC)	1005	1A	R9, R16, R17, R18, R19, R20, R21, R22, R23, R24, R25	11	
Resistor	0Ω	1005	1A	R7, R8, R10, R11, R12, R13, R14, R15	8	

Table 8 THEVA218-V2 BOM

TYPE	Value / Part No.	Package	SPEC	Reference No.	Q'ty	Note
Capacitor	10uF	2012	16V	C1, C3, C5, C6, C9, C10	6	
Capacitor	0.1uF	1005	16V	C2, C4, C7, C8	4	
Capacitor	0.01uF	1005	16V	C11, C12, C13, C14, C15, C16, C17, C18, C19, C20, C21, C22, C23, C24, C25, C26, C27, C28, C29, C30, C31, C32, C33, C34, C35, C36	26	
Connector	282836-2(NC)	5mm_pitch	2pin	CON1	1	
Connector	52271-1469(NC)	1mm_pitch	14pin	CON2	1	
Connector	CN-FFC(0.5)12PD(NC)	0.5mm_pitch	12pin	CON3	1	
Connector	PCN10-48P-2.54DSA_RIGHT(NC)	2.54mm_pitch	48pin	Header1, Header2	2	
Connector	SMA103-T16(NC)	1.6mm	PCB End Jack	SMA1, SMA2, SMA3, SMA4	4	
Header	3HEAD(NC)	2.54mm_pitch	---	Header3, Header4, Header5, Header6, Header7, Header8, Header9, Header10, Header11, Header12, Header13	11	
IC	THCV218	TFBGA145	THCV218	IC2	1	
IC	uPC2918BT	SC-63	1A	IC1	1	
Inductor	MPZ1608R471A	1608	1.2A	L1, L2, L3	3	
LED0	SML-310MT	1608	GREEN	D1	1	
Resistor	10Ω	Resistor	0.1W	R1, R2, R3, R4, R7, R8, R9, R10, R11, R12, R13, R14, R15, R16, R17, R18, R19, R20, R21, R22, R23, R24, R25, R26, R27, R28, R29, R32, R35, R37, R42, R43, R45, R47, R48, R49, R50, R51, R52, R53, R54, R55, R56, R57, R59, R60, R61, R62, R63, R64, R65, R67, R68, R69, R71, R73, R74, R77, R79, R80, R83, R84, R85, R87, R88, R89, R90, R93, R96	69	
Resistor	150Ω	1005	0.1W	R5	1	
Resistor	1kΩ(NC)	1005	0.1W	R6	1	
Resistor	0Ω	1005	1A	R30, R31, R33, R34, R36, R38, R39, R40, R41, R44, R46	11	
Resistor	0Ω(NC)	1005	1A	R58, R66, R70, R72, R75, R76, R78, R81, R82, R86, R91, R92, R94, R95	14	

Copyright(C) 2023 THine Electronics, Inc.

Downloaded from Arrow.com.

Set Items

Table 9

TYPE	Part No.
DC Connector	282836-2
FFC Connector for V-by-One®HS Link	52271-1469
FFC 14pin 1mm Pitch for V-by-One®HS Link	98267-0299
Pin Header	---

It's possible to mount these parts on this board and use.

Copyright(C) 2023 THine Electronics, Inc.

Downloaded from Arrow.com.

Notices and Requests

1. The product specifications described in this material are subject to change without prior notice.

2. The circuit diagrams described in this material are examples of the application which may not always apply to the customer's design. THine Electronics, Inc. ("THine") is not responsible for possible errors and omissions in this material. Please note even if errors or omissions should be found in this material, THine may not be able to correct them immediately.

3. This material contains THine's copyright, know-how or other intellectual property rights. Copying, reverse-engineer or disclosing to third parties the contents of this material without THine's prior written permission is prohibited.

4. THINE ACCEPTS NO LIABILITY FOR ANY DAMAGE OR LOSS IN CONNECTION WITH ANY DISPUTE RELATING TO INTELLECTUAL PROPERTY RIGHTS BETWEEN THE USER AND ANY THIRD PARTY, ARISING OUT OF THIS PRODUCT, EXCEPT FOR SUCH DAMAGE OR LOSS IN CONNECTION WITH DISPUTES SUCCESSFULLY PROVED BY THE USER THAT SUCH DISPUTES ARE DUE SOLELY TO THINE. NOTE, HOWEVER, EVEN IN THE AFOREMENTIONED CASE, THINE ACCEPTS NO LIABILITY FOR SUCH DAMAGE OR LOSS IF THE DISPUTE IS CAUSED BY THE USER'S INSTRUCTION.

5. This product is not designed for applications that require extremely high-reliability/safety such as aerospace device, nuclear power control device, or medical device related to critical care, excluding when this product is specified for automotive use by THine and used it for that purpose. THine accepts no liability whatsoever for any damages, claims or losses arising out of the uses set forth above.

6. Despite our utmost efforts to improve the quality and reliability of the product, faults will occur with a certain small probability, which is inevitable to a semi-conductor product. Therefore, you are encouraged to have sufficiently fail-safe design principles such as redundant or error preventive design applied to the use of the product so as not to have our product cause any social or public damage.

7. This product may be permanently damaged and suffer from performance degradation or loss of mechanical functionality if subjected to electrostatic charge exceeding capacity of the ESD (Electrostatic Discharge) protection circuitry. Safety earth ground must be provided to anything in contact with the product, including any operator, floor, tester and soldering iron.

8. Please note that this product is not designed to be radiation-proof.

9. Testing and other quality control techniques are used to this product to the extent THine deems necessary to support warranty for performance of this product. Except where mandated by applicable law or deemed necessary by THine based on the user's request, testing of all functions and performance of the product is not necessarily performed.

10. This product must be stored according to storage method which is specified in this specifications. THine accepts no liability whatsoever for any damage or loss caused to the user due to any storage not according to above-mentioned method.

11. Customers are asked, if required, to judge by themselves if this product falls under the category of strategic goods under the Foreign Exchange and Foreign Trade Act in Japan and the Export Administration Regulations in the United States of America on export or transit of this product. This product is prohibited for the purpose of developing military modernization, including the development of weapons of mass destruction (WMD), and the purpose of violating human rights.

12. The product or peripheral parts may be damaged by a surge in voltage over the absolute maximum ratings or malfunction, if pins of the product are shorted by such as foreign substance. The damages may cause a smoking and ignition. Therefore, you are encouraged to implement safety measures by adding protection devices, such as fuses. THine accepts no liability whatsoever for any damage or loss caused to the user due to use under a condition exceeding the limiting values.

13. All patents or pending patent applications, trademarks, copyrights, layout-design exploitation rights or other intellectual property rights concerned with this product belong to THine or licensor(s) of THine. No license or right is granted to the user for any intellectual property right or other proprietary right now or in the future owned by THine or THine's licensor. The user must enter into a license agreement with THine or THine's licensor to be granted of such license or right.

THine Electronics, Inc.

https://www.thine.co.jp

Copyright(C) 2023 THine Electronics, Inc.

Downloaded from Arrow.com.