Copyright FCI.

FCIconnect.com

PRODUCT NUMBER	PITCH
YIxx01x100J0G	5.00 mm

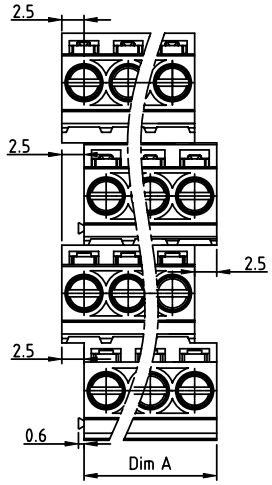

DIMENSION

Dim A=N/4x5.0
Dim B=(N/4-1)x5.0

N=Number of poles

Poles	Tolerance
8poles~24poles	±0.20
28poles~48poles	±0.25
52poles~72poles	±0.30
76poles~96poles	±0.40

PART NO.: YI xx 01 x 1 00J0 G

End stackable No. of poles
08 4x2 poles
12 4x3 poles
... ...
96 4x24 poles

Color
0 Black (RAL9005)
2 Red (RAL3001/D)
3 Orange(RAL2011/P)
4 Yellow(RAL1018/A)
5 Green(RAL6018/T)
6 Blue (RAL5015/A)
8 Grey(RAL7035/D)
9 White(RAL1102)
C Green(RAL6018/U)

RoHS compliant (lead<4%) In copper Alloy

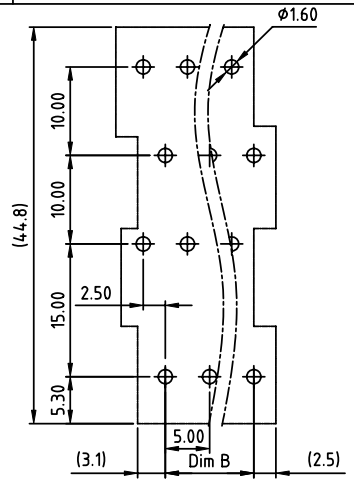

RECOMMENDED P.C.B LAYOUT
TOP VIEW

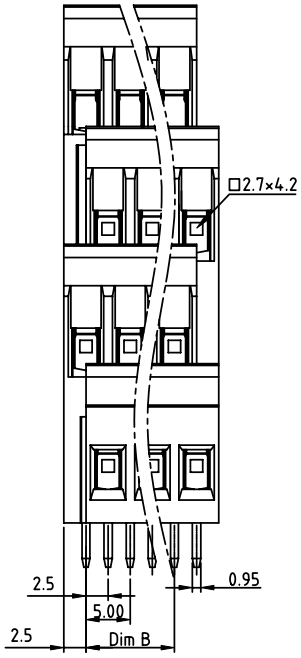

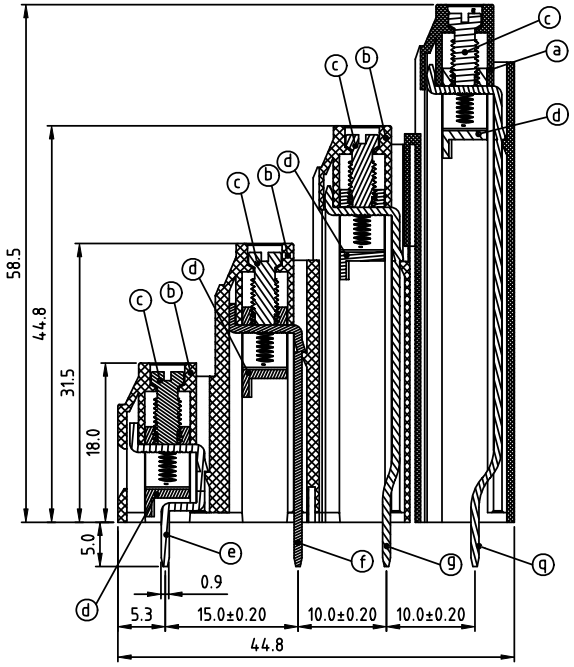

Material:
- Item ⓐ Terminal housing : Thermoplastic (UL94V-0)(YG5.0)
- Item ⓑ Terminal housing : Thermoplastic (UL94V-0)(YH5.0)
- Item ⓒ Terminal screw: Steel Zinc plating "-" slot type
- Item ⓓ Clamp : Brass , Ni plating
- Item ⓔ Solder pin1 : Brass,Tin plated
- Item ⓕ Solder pin2 : Brass,Tin plated
- Item ⓖ Solder pin3 : Brass,Tin plated
- Item ⓖ Solder pin4 : Brass,Tin plated

Electrical cULus
- Voltage rating: 300VAC
- Current rating: 15A
- Wire range:
- Solid wire(AWG): 12-28
- Stranded wire(AWG): 12-28
- Torque(Lb-In): 4.3
- Screw: M3
- Wire strip length: 6-7mm
- Withstanding Voltage: 1.6KV
- Operating temperature: -40°C to +115°C
- Soldering temperature: 260°C±5°C/5 Sec

mat'l. code				surface ASME Y14.5	tolerance ASME Y14.5	projection	product family TERMINAL BLOCK
ltr	ecn no	dr	date	tolerances unless otherwise specified			title TERMINAL BLOCK
				angles	linear X.±0.5 / X.X±0.3 / X.XX±0.1	MM	RISING CLAMP,180D WIRE INLET,END STACKABLE
				X°±1°		scale	
				dr	EVIN ZHONG 041114	FCI	dwg no YIxx01x100J0G sheet 1 of 1 size A4
				engr	EVIN ZHONG 041114		
				chr	HANKE FENG 041114		
				appd	SHI JUN 041114		type CUSTOMER Drawing
sheet index	revision	A					
	sheet	1					

form: A4mmXLc

Downloaded from Arrow.com.