Part number description :
10134288-XXXLF

- LF: Lead Free, RoHs compliant, see note
- XXX : Color ref or/and version

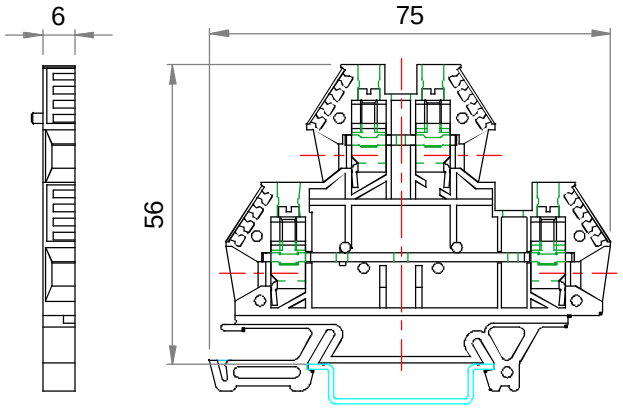

Note : THIS PRODUCT MEETS EUROPEAN UNION DIRECTIVES AND OTHER COUNTRY REGULATIONS AS PER GS-47-0004

PN	Colour	Version
10134288-001LF	grey	
10134288-002LF	black	
10134288-003LF	blue	
10134288-004LF	brown	
10134288-005LF	yellow-green	
10134288-006LF	green	
10134288-007LF	yellow	
10134288-008LF	orange	
10134288-009LF	red	
10134288-010LF	white	

TECHNICAL DATA / DIMENSIONS

Dimensions	
Width mm	6.0
Length mm	75.0
Height mm	56.0
Mounting type (EN 60715)	Omega TH35
Technical data	
Maximum load current	32A
Insulating material	PA
Self-extinguishing degree acc. to UL94	V2
Rated surge voltage	8kV
Pollution degree	3
Surge voltage category	III
Insulating material group	I
Nominal Voltage	1000V
Nominal Current	32A
Connection data	
Conductor cross-section solid min/max	0.50 / 6 mm^2
Conductor cross-section stranded min/max	0.50 / 6 mm^2
AWG min/max	24-10AWG
Max conductor cross-section stranded with ferrule with plastic sleeve	4 mm^2 / L=8 mm
Stripping length	max 6 mm
Screw	M3
Tightening torque	0,6Nm / 7. 0 Lb-In

APPROVALS

AWG 24-10 – 600V – 30A

RINA

EN60947-7-1 4mm^2 – 1000V – 2A

ACCESSORIES

Item	Description
Marking	
10134398-001LF	Blank single-digit marking tags
10134398-002LF÷ 10134398-011LF	Printed single-digit marking tags numbered : 1÷0
10134398-012LF÷ 10134398-041LF	Printed single-digit marking tags with letter: A÷Z
10134399-001LF	Marking tag adapter
10134400-001LF	Blank Marking tags
10134401-001LF	Blank Marking tags
DIN RAIL system - Mounting and Installation material	
10134392-001LF	Steel Omega Rail TH35x7,5mm -2mt length
10134393-001LF	Slotted Steel Omega Rail TH35x7,5mm -2mt length
10134394-001LF	Steel Omega Rail TH35x15mm -2mt length
10134395-001LF	Slotted Steel Omega Rail TH35x15mm -2mt length
10134387-001LF	Angled support bracket
10134389-001LF	End Bracket for TH35 Omega rail -Width 9mm
10134390-001LF	End Bracket for TH35 Omega rail -Width 6mm
10134391-001LF	Fast-snap End Bracket for TH35 Omega rail
Additional items	
10134292-001LF	End Plate for SCREW Terminal Blocks D4
10134272-001LF	Jumper bar 2 poles,pitch 6,1mm J4
10134272-002LF	Jumper bar 3 poles,pitch 6,1mm J4
10134272-003LF	Jumper bar 24 poles,pitch 6,1mm J4
10134271-002LF	Ratchet Cutting Tool for jumper bar J4 -yellow
10134276-001LF	Red test plug adapter
10134276-002LF	Black test plug adapter

spec ref			dr	Aymeric Soudy	11-06-2015	projection	size A3 / scale 1:1
tolerance std ISO 406 ISO 1101	TOLERANCES UNLESS OTHERWISE SPECIFIED		eng	Aymeric Soudy	11-06-2015	mm	ecn no
			chr				
			appr	Aymeric Soudy	11-06-2015	product family DIN Terminal Block	rel level
surface ISO 1302	linear	0.X ± 0.3	FCI www.fci.com	title Two stage SCREW Terminal Block D4-2		dwg no 10134288	rev A
		0.XX ± 0.1					
		0.XXX ± 0.05					
	angular	0° ± 2°		cat. no. -		Product customer drawing	sheet 1 of 1

Copyright FCI.

Downloaded from Arrow.com.