REV.	ECR/ECN No.	DESCRIPTION	DRAWN/DATE	CHECKED/DATE	APPROVLED/DATE
D	/	Unified the dimension	May 2016-08-11	Rain 2016-08-11	Hongkui.Liu 2016-08-11
E	/	Add 21 pin	May 2019-07-15	Rain 2019-07-15	Hongkui.Liu 2019-07-15
F	/	Updata the drawing frame	May 2022-02-23	SH.Chen 2022-02-23	Rain.Han 2022-02-22

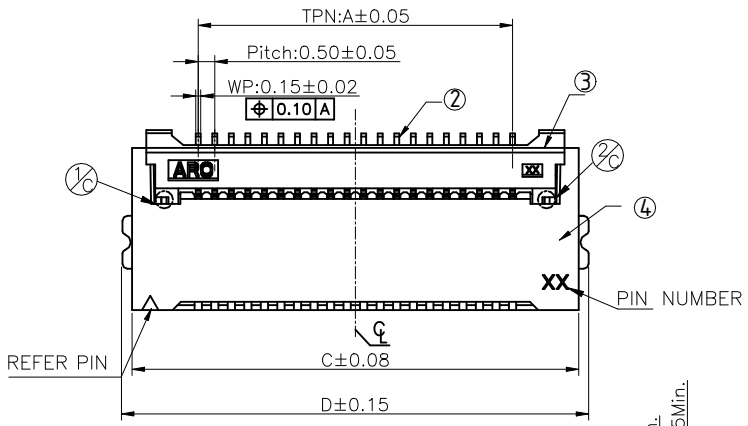

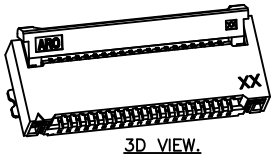

3D VIEW.

NO.	COMPONENTS	MATERIALS	FINISH/COLOR SPECIFICATION	QUANTITY
1	STATOR	BRASS;T=0.15mm	UNDER PLATING:1~3μm Ni SURFACE PLATING:2~5μm Sn	2 PCS
2	CONTACT	PHOSPHOR BRONZE T=0.15mm	UNDER PLATING:1~3 m Ni SURFACE PLATING:SEE NOTE	N PCS
3	COVER	PA9T UL94V-0	BLACK	1 PCS
4	HOUSING	LCP UL94V-0	NATURAL	1 PCS

NOTE:
1.ALL MATERIAL MUST BE COMPLY WITH SS-00259 OR RoHS.
2." ▼ " MARK IS IMPORTANT DIMENSIONS
3." ▽ " MARK IS CPK AND X-R̄ DIMENSION
4.PART NO. LEGEND:
F32D-1A7*1-210**
NO. OF POSITIONS
7Y:Regional gold plated 0.075um min.
7L: Au 0.05um/Tin

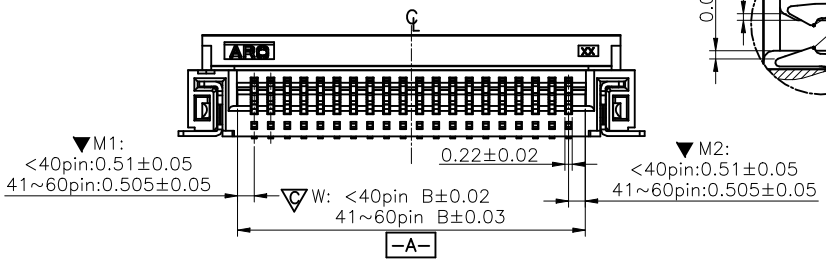

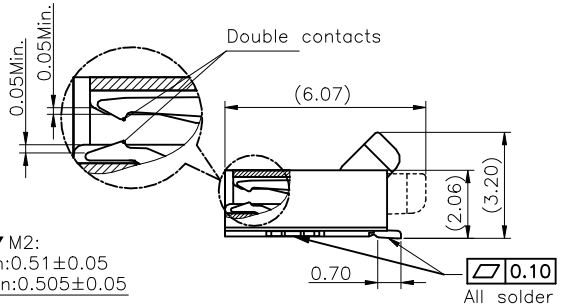

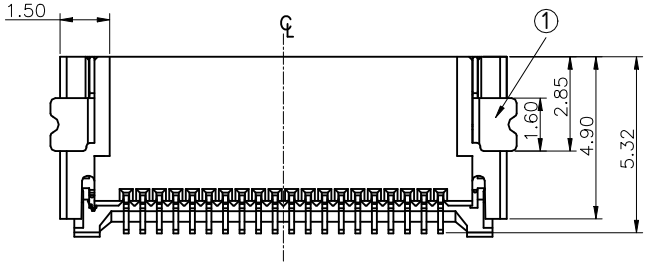

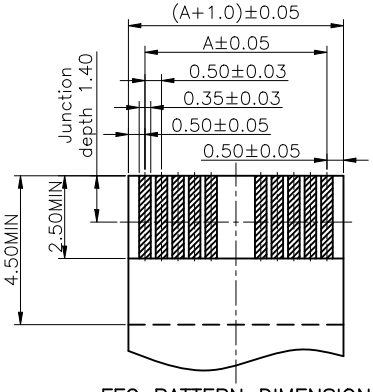

FFC PATTERN DIMENSION
Thickness=0.30±0.03mm

DIMENSION LIST:

NO. POSITIONS \ SIZE	A	B	C	D	NO. POSITIONS \ SIZE	A	B	C	D
4	1.50	2.55	5.50	6.10	26	12.50	13.55	16.50	17.10
5	2.00	3.05	6.00	6.60	28	13.50	14.55	17.50	18.10
6	2.50	3.55	6.50	7.10	30	14.50	15.55	18.50	19.10
8	3.50	4.55	7.50	8.10	32	15.50	16.55	19.50	20.10
9	4.00	5.05	8.00	8.60	34	16.50	17.55	20.50	21.10
10	4.50	5.55	8.50	9.10	36	17.50	18.55	21.50	22.10
12	5.50	6.55	9.50	10.10	38	18.50	19.55	22.50	23.10
14	6.50	7.55	10.50	11.10	40	19.50	20.55	23.50	24.10
15	7.00	8.05	11.00	11.60	42	20.50	21.55	24.50	25.10
16	7.50	8.55	11.50	12.10	45	22.00	23.05	26.00	26.60
18	8.50	9.55	12.50	13.10	50	24.50	25.55	28.50	29.10
20	9.50	10.55	13.50	14.10	54	26.50	27.55	30.50	31.10
21	10.00	11.05	14.00	14.60	55	27.00	28.05	31.00	31.60
22	10.50	11.55	14.50	15.10	58	28.50	29.55	32.50	33.10
24	11.50	12.55	15.50	16.10	60	29.50	30.55	33.50	34.10

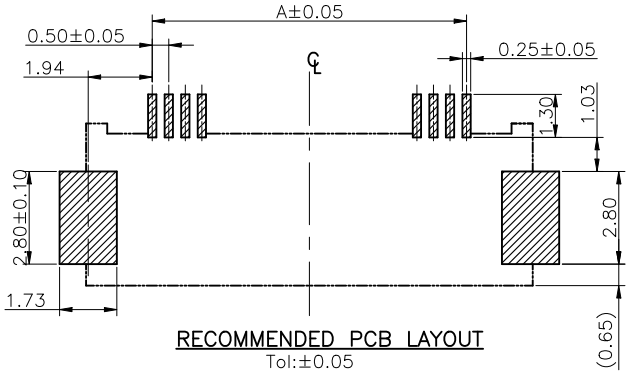

RECOMMENDED PCB LAYOUT
Tol:±0.05

AAOR
文件发行
2022/2/23

UNLESS OTHERWISE SPECIFIED TOLERANCES			
X.	±0.30	X. °	± 5°
X.X	±0.25	X.X °	± 4°
X.XX	±0.20	X.XX °	± 3°
X.XXX	±0.15	X.XXX °	± 2°
LINEAR DIMS		ANGLES DIMS	
DWG NO.:	A-S0185		
MATERIAL	SEE NOTES		
FINISHED	SEE NOTES		

ANGLE OF PROJECTION

DOC TYP	Customer Drw	
DRAWN	DATE	May 2022-02-23
DESIGN	DATE	May 2022-02-23
CHECKED	DATE	SH.Chen 2022-02-23
APPROVED	DATE	Rain.Han 2022-02-23

Amphenol AORORA
Amphenol Aorora Technology (Huizhou) Co.,Ltd

TITLE:
0.5MM FFC/FPC DUAL CONTACT SIDE CONNECTOR (H=2.00)

SIZE	PART NUMBER:	REV.
A4	F32D-1A7*1-210**	F
SCALE 5:1	UNIT : mm	SHEET 1 OF 2

This document is the property of and embodies CONFIDENTIAL and PROPRIETARY information of AAOR. No part of the information shown on this document may be used in any way or disclosed to others without the written consent of AAOR. © 2019 AAOR

Downloaded from Arrow.com.

1. PACKING INTO REEL:

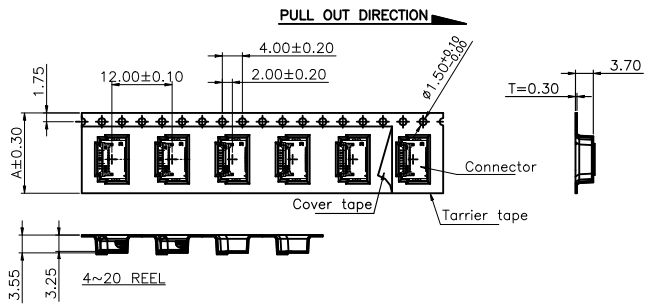

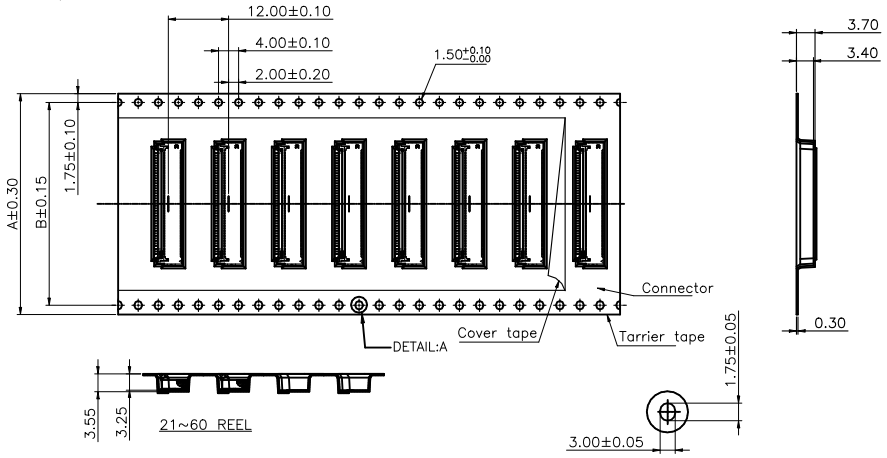

DETAIL:A;SCALE:2:1

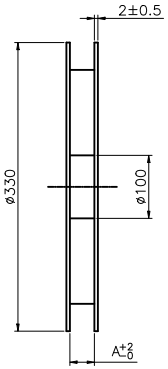

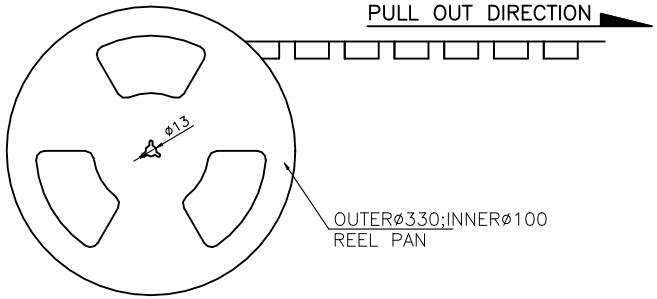

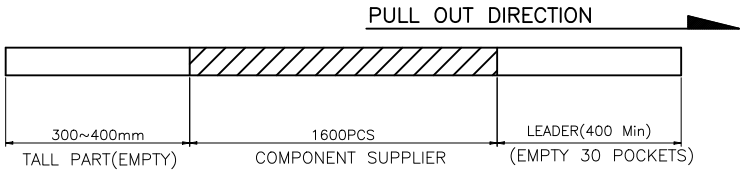

NOTES:

1. MATERIAL:
   1.1 CARRY TAPE:HIPS,T=0.30±0.05mm,CLEAR
   1.2 REEL:HIPS,
   1.3 SHIM:PE,CLEAR.
2. SECONDARY PACKING:"N"REELS/CARTON ("TOTAL"=N*2000/CARTON).
3. SECONDARY PACKING:SEE PACKING LIST
4. PEELING RESISTANCE: 0.1~0.7N(10~70gf); PEELING ANGLE: 165°~180°; PEELING SPEED: 300mm/minutes.

5. QTY. LIST:

NO. OF POS.	A	B	PCS/REEL	N REEL/CARTON (TOL:PCS)
4~8PIN	16.0		1600	15R(24000PCS)
9~20 PIN	24.0		1600	11R(17600PCS)
21~34 PIN	32.0	28.4	1600	8R(12800PCS)
35~54 PIN	44.0	40.4	1600	6R(9600PCS)
55~60 PIN	56.0	52.4	1600	5R(8000PCS)

2:PACKING INTO OUTER BOX

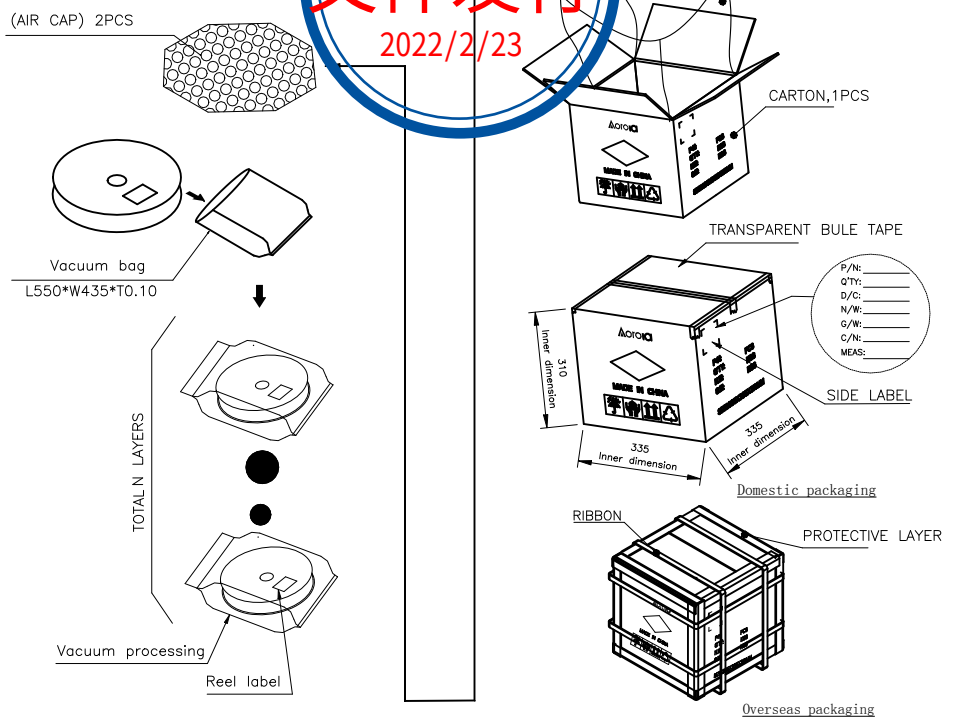

Domestic packaging

Overseas packaging

AAOR 文件发行 2022/2/23

UNLESS OTHERWISE SPECIFIED TOLERANCES		ANGLE OF PROJECTION	
X. ±0.30	X. ° ± 5°		
X.X ±0.25	X.X ° ± 4°		
X.XX ±0.20	X.XX ° ± 3°		
X.XXX ±0.15	X.XXX ° ± 2°		
LINEAR DIMS	ANGLES DIMS		
DWG NO.: A-S0185			
MATERIAL	SEE NOTES		
FINISHED	SEE NOTES		

DOC TYP	Customer Drw	
DRAWN DATE	May 2022-02-23	
DESIGN DATE	May 2022-02-23	
CHECKED DATE	SH.Chen 2022-02-23	
APPROVED DATE	Rain.Han 2022-02-23	

Amphenol AORORA
Amphenol Aorora Technology (Huizhou) Co.,Ltd

TITLE:
0.5MM FFC/FPC DUAL CONTACT SIDE CONNECTOR (H=2.00)

SIZE	PART NUMBER:	REV.
A4	F32D-1A7*1-210**	F
SCALE 1:1	UNIT : mm	SHEET 2 OF 2

This document is the property of and embodies CONFIDENTIAL and PROPRIETARY information of AAOR. No part of the information shown on this document may be used in any way or disclosed to others without the written consent of AAOR. © 2019 AAOR

Downloaded from Arrow.com.