MALE PLUG ULTRA LOCK U12 90° ANGLED

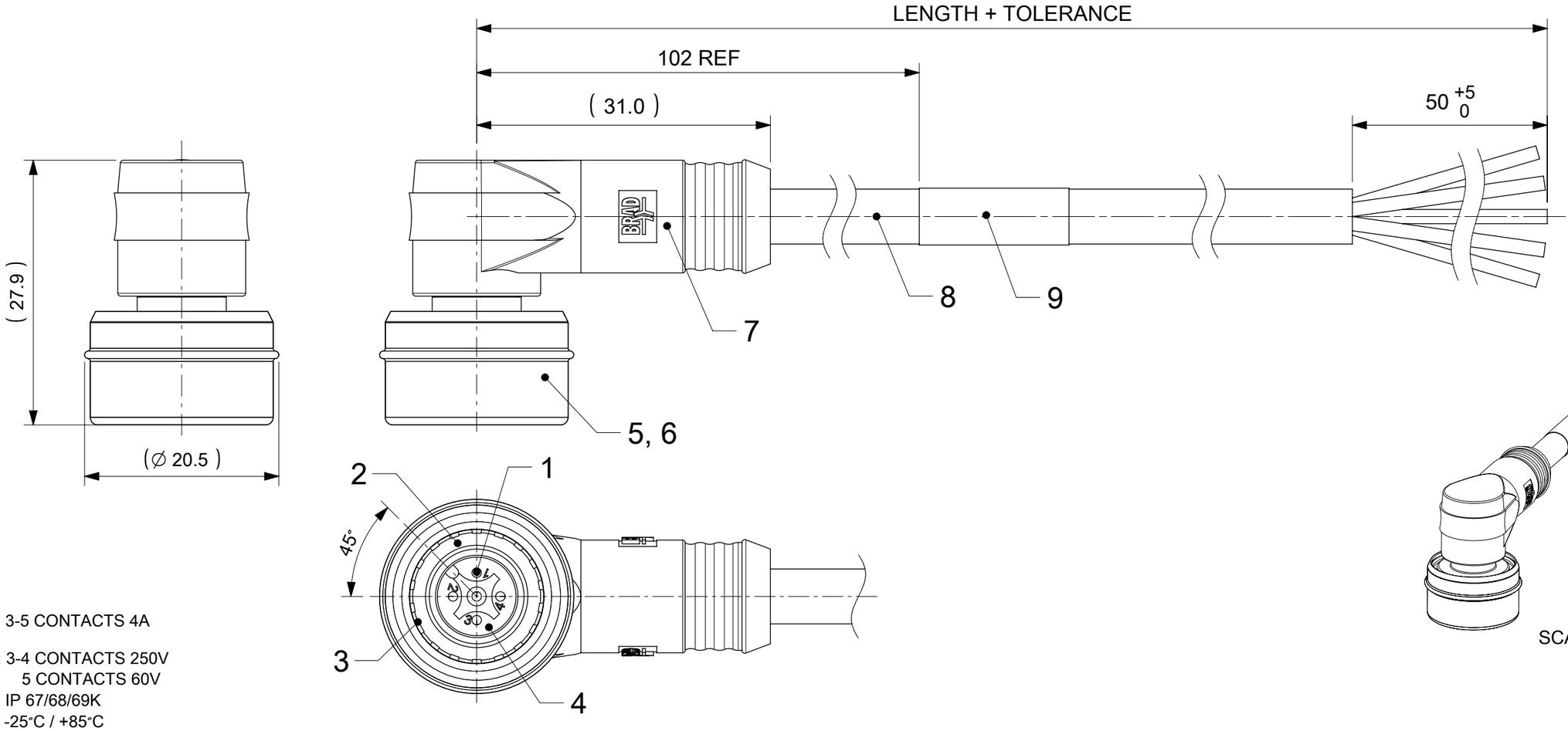

SCALE 1:1

NOTES:

CURRENT RATING: 3-5 CONTACTS 4A

VOLTAGE RATING: 3-4 CONTACTS 250V
5 CONTACTS 60V

PROTECTION CLASS: IP 67/68/69K

TEMPERATURE: -25°C / +85°C

CONTACTS POSITION FRONT VIEW:

3 CONTACTS		4 CONTACTS		5 CONTACTS	
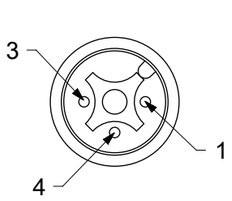		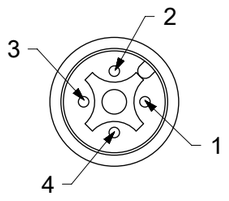		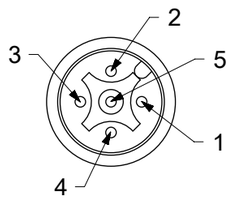	
PIN	WIRE	PIN	WIRE	PIN	WIRE
1	BROWN	1	BROWN	1	BROWN
2	---	2	WHITE	2	WHITE
3	BLUE	3	BLUE	3	BLUE
4	BLACK	4	BLACK	4	BLACK
5	---	5	---	5	GREY
CODING ACCORDING TO IEC 61076-2-101					

FOR OPTIONS SEE - NUMERICAL CODE - ON SHEET 2

ITEM	QTY.	DESCRIPTION	MATERIAL	FINISH
9	1	LABEL YELLOW	VINYL	---
8	-	CABLE	SEE SHEET 2	---
7	-	OVERMOULD BLACK	TPU	---
6	1	SLEEVE U12 INNER	BRASS	NICKEL
5	1	SLEEVE U12 OUTER	BRASS	NICKEL
4	1	INSERT MALE BLACK	PUR	---
3	1	SPRING U12	V4A	---
2	1	ORING GREEN	FPM	---
1	3 / 4 / 5	CONTACT M12 MALE	BRASS	SELECTIVE GOLD OVER NICKEL

THIS DRAWING CONTAINS INFORMATION THAT IS PROPRIETARY TO MOLEX ELECTRONIC TECHNOLOGIES, LLC AND SHOULD NOT BE USED WITHOUT WRITTEN PERMISSION

DIMENSION UNITS: mm | SCALE: 2:1

GENERAL TOLERANCES (UNLESS SPECIFIED)

ANGULAR TOL	±	1.0 °
4 PLACES	±	
3 PLACES	±	
2 PLACES	±	0.05
1 PLACE	±	0.3
0 PLACES	±	0.5

DRAFT WHERE APPLICABLE MUST REMAIN WITHIN DIMENSIONS

CURRENT REV DESC: REMOVED OBSOLETED PART NUMBERS AS PER PCN #516874

EC NO: 835282
DRWN: PRANAA 2025/09/16
CHK'D: GGA 2025/10/03
APPR: GGA 2025/10/03

INITIAL REVISION:
DRWN: JMARSZALEK 2016/06/23
APPR: RSILLER 2016/06/29

THIRD ANGLE PROJECTION | DRAWING: A3-SIZE | SERIES: 120079

molex

CSE U12 XP AC MA RA XM SE UNSH

PRODUCT CUSTOMER DRAWING

DOCUMENT NUMBER	DOC TYPE	DOC PART	REVISION
1200795111	PSD	000	A6

MATERIAL NUMBER	CUSTOMER	SHEET NUMBER
SEE PART LIST	GENERAL MARKET	1 OF 2

DOCUMENT STATUS	P1	RELEASE DATE	2025/10/03 08:15:25

Downloaded from Arrow.com.

ENGINEERING NO. - NUMERICAL CODE (Available parts see PART LIST table. Other parts available upon request).

OPTIONS

W	0	X	0	0	7	X	X	X	X	X	X	X	X

- W0=U12 Ultra Lock Single ended
- Poles: 3=3 Poles, 4=4 Poles, 5=5 Poles
- Heads style: 007=Plug Male Angled
- Cable type: See Table
- Units: M=Meter
- Length Examples: 005=0.5 units, 010=1 units, 100=10 units
- Overmold color: Blank (Standard)=Black, A=Grey / G=Black / Y=Yellow

  Ultra Lock Assembly: Blank (Standard)=Brass, Ni Plated, 8=Stainless steel, EPDM oring

  H= 2 pcs. of I/D Carrier PVC Transparent (Cables Ixx & P82 always with 2 pcs. of I/D Carrier)

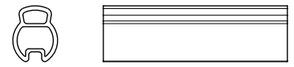

CABLE INFORMATION (for more information see Cable Data Sheet).

CABLE TYPE	NO. OF WIRES	CROSS SECTION	CABLE JACKET	UL	CSA	STATIC: TEMP. / BENDING RADIUS	DYNAMIC: TEMP. / BENDING RADIUS	DRAG CHAIN	SHIELD
E03	3 / 4 / 5	0.34mm²	PVC BLACK	UL 2464/1729	C22.2 I/II A/B 80°/300V	-30°C to +80°C, 10xO.D.	-10°C to +80°C, 15xO.D.	-	-
H09	3 / 4 / 5	0.34mm²	PUR BLACK LS0H	UL 21198/10493	C22.2 I/II A/B 80°/300V	-40°C to +80°C, 5xO.D.	-25°C to +80°C, 10xO.D.	2 000 000 cycles, Temp max 60°C	-
P03	3 / 4 / 5	0.34mm²	PUR / PVC BLACK	-	-	-30°C to +80°C, 7xO.D.	-5°C to +80°C, 15xO.D.	-	-
K05	4	0.34mm²	TPE/YELLOW						

PART LIST

No.	Molex P/N	Engineering no.	Cable Length
1	1200200002	W03007P03M020	2m
2	1200795108	W04007E03M020	2m
3	1200795109	W04007P03M020	2m
4	1200795111	W05007E03M020	2m
5	1200795112	W05007P03M020	2m
6	1200798004	W04007E03M050	5m
7	1200798005	W04007P03M050	5m
8	1200798020	W04007P03M100	10m
9	1200798041	W03007H09M020	2m
10	1200798050	W05007H09M020	2m
11	1200798052	W04007H09M020	2m
12	1200798080	W05007E03M015	1.5m
13	1200798085	W05007E03M003	0.3m
14	1200798125	W05007E03M200	20m
15	1200795107	W03007E03M020	2m
16	1200798150	W03007E03M050	5m
17	1200798151	W03007E03M100	10m
18	1200798152	W04007E03M100	10m
19	1200798153	W05007E03M050	5m
20	1200798154	W05007E03M100	10m
21	1200798160	W05007H09M200	20m

No.	MOLEX P/N	ENGINEERING NO.	Cable Length
22	1200790192	W04007K05M020	2m
23	1200790194	W04007K05M050	5m
24	1200790196	W04007K05M100	10m

CABLE LENGTH TOLERANCES

OVER	UP TO AND INCLUDING	TOLERANCES
0	305mm	+19mm
305mm	915mm	+45mm
915mm	1830mm	+56mm
1830mm	3660mm	+89mm
3660mm	7320mm	+165mm
7320mm	14640mm	+317mm
14640mm	30500mm	+610mm
30500mm	>	+2% of finished length

THIS DRAWING CONTAINS INFORMATION THAT IS PROPRIETARY TO MOLEX ELECTRONIC TECHNOLOGIES, LLC AND SHOULD NOT BE USED WITHOUT WRITTEN PERMISSION

DIMENSION UNITS: mm | SCALE: 1:1

GENERAL TOLERANCES (UNLESS SPECIFIED)

ANGULAR TOL	± 1.0 °
4 PLACES	±
3 PLACES	±
2 PLACES	± 0.05
1 PLACE	± 0.3
0 PLACES	± 0.5

DRAFT WHERE APPLICABLE MUST REMAIN WITHIN DIMENSIONS

CURRENT REV DESC: REMOVED OBSOLETED PART NUMBERS AS PER PCN #516874

EC NO: 835282
DRWN: PRANAA 2025/09/16
CHK'D: GGA 2025/10/03
APPR: GGA 2025/10/03

INITIAL REVISION:
DRWN: JMARSZALEK 2016/06/23
APPR: RSILLER 2016/06/29

molex

CSE U12 XP AC MA RA XM SE UNSH

PRODUCT CUSTOMER DRAWING

DOCUMENT NUMBER	DOC TYPE	DOC PART	REVISION
1200795111	PSD	000	A6

THIRD ANGLE PROJECTION | DRAWING: A3-SIZE | SERIES: 120079 | MATERIAL NUMBER: SEE PART LIST | CUSTOMER: GENERAL MARKET | SHEET NUMBER: 2 OF 2

DOCUMENT STATUS	P1	RELEASE DATE	2025/10/03 08:15:25

Downloaded from Arrow.com.