Datasheet

Type 1WL LoRa + Wi-Fi® + Bluetooth® + GNSS Module Rev B

Semtech LR1110 Chipset for LoRa, Wi-Fi Scan, GNSS Scan
STMicro STM32WB55VGY6 Chipset for MCU and BLE
Airoha MT3333AV Chipset for High-Performance GNSS

- Design Name: Type 1WL
- P/N: LBEU5ZZ1WL-633

Downloaded from Arrow.com.

Table of Contents

1 Scope 6
2 Features & Benefits 6
2.1 Features 6
2.2 Benefits 6
3 Ordering Information 7
4 Block Diagram 8
5 Certification Information 9
5.1 Radio Certification 9
5.2 Bluetooth Qualification 9
6 Dimensions, Markings and Terminal Configurations 10
7 Module Pin Descriptions 11
7.1 Pin Assignments 11
7.2 Pin Descriptions 12
7.3 Configuration Pins 14
8 Absolute Maximum Ratings 14
9 Operating Conditions 14
9.1 Operating Conditions 14
9.2 Digital I/O Requirements 15
9.3 Package Thermal Conditions 15
10 Power Sequence 16
10.1 Power-On Sequence 16
10.2 Power-On Sequence 16
10.3 Power-Off Sequence 16
11 Host Interface Specification 17
11.1 USB Specifications 17
11.2 LPUART Specifications 17
11.3 I2C Specifications 17
11.4 SPI Specifications 18
11.5 SWD Specifications 18
12 DC/RF Characteristics 18
12.1 Sleep Current 19
12.2 DC/RF Characteristics for Sub-GHz 19
12.3 DC/RF Characteristics for Wi-Fi Passive Scanner 20
12.4 DC/RF Characteristics for Bluetooth Low Energy 20
12.4.1 1 Mbps PHY Condition 21

Downloaded from Arrow.com.

12.4.2 2 Mbps PHY Condition 22
12.5 DC/RF Characteristics for GNSS 24
12.5.1 LR1110 GNSS Scanner Receiver Specification 24
12.5.2 MT3333 GNSS Receiver Specification 24
13 Land Pattern 25
14 Reference Circuit 26
15 General Regulatory Certification for LBEU5ZZ1WL 27
15.1 Application Model Part Number 27
15.2 Label 27
15.3 Package Label 27
15.4 Country of Origin 28
16 Radio Regulatory Certification by Country for LBEU5ZZ1WL 29
16.1 JRL 29
16.1.1 Power Level for Japan 29
16.1.2 About Notations 29
16.2 FCC 30
16.2.1 Power Level for FCC 30
16.2.2 Information to Include in the User Manual 30
16.3 ISED 31
16.3.1 Information to Display on Host Device and User Manual 31
16.3.2 Power Level for ISED 31
16.4 Europe 32
16.4.1 Power Level for Europe 32
17 Tape and Reel Packing 33
17.1 Dimensions of Tape (Plastic Tape) 33
17.2 Dimensions of Reel 34
17.3 Taping Diagrams 35
17.4 Leader and Tail Tape 36
17.5 Packaging (Humidity Proof Packing) 37
18 Notice 38
18.1 Storage Conditions 38
18.2 Handling Conditions 38
18.3 Standard PCB Design (Land Pattern and Dimensions) 38
18.4 Notice for Chip Placer 39
18.5 Soldering Conditions 39
18.6 Cleaning 39
18.7 Operational Environment Conditions 40

Downloaded from Arrow.com.

18.8 Input Power Capacity 40
19 Preconditions to Use Our Products 41
Revision History 43

Figures

Figure 1: Block Diagram 8
Figure 2: Dimensions, Markings, and Terminal Configurations 10
Figure 3: Pin Assignments (Top View) 11
Figure 4: Package Thermal Conditions 16
Figure 5: Power-On Sequence Graph 16
Figure 7: Burst current definition 19
Figure 8: Land Pattern 25
Figure 9: Reference Circuit 26
Figure 10: Radio Regulatory Certification Label 27
Figure 11: Package Label (Humidity proof Packing) 27
Figure 12: Package Label Display Example 28
Figure 13: Dimensions of Tape (Plastic tape) 33
Figure 14: Dimensions of Reel (Unit: mm) 34
Figure 15: Taping Diagrams 35
Figure 16: Leader and Tail Tape 36
Figure 17: Peeling Force 36
Figure 18: Humidity Proof Packaging 37
Figure 19: Reflow soldering standard conditions (Example) 39

Tables

Table 1: Document Conventions 5
Table 2: Ordering Information 7
Table 3: Transmit Power Limit 9
Table 4: Markings 10
Table 5: Dimensions 10
Table 6: Terminal Configurations 12
Table 7: Pin Descriptions 12
Table 8: Boot modes configuration 14
Table 9: Absolute and Maximum Ratings 14
Table 10: Operating Conditions 15
Table 11: Digital I/O Characteristics 15
Table 12: Parameters for Power-On Sequence Graph 16

Downloaded from Arrow.com.

Table 14: USB electrical characteristics 17
Table 15: I2C Implementation 17
Table 16: I2C analog filter characteristic 18
Table 17: DC/RF Characteristics and Files 18
Table 18: Sub-GHz Bands Specifications 19
Table 19: Wi-Fi Passive Scanner Specifications 20
Table 20: BLE 1 Mbps PHY Condition 21
Table 21: BLE 2 Mbps PHY Condition 22
Table 22: LR1110 GNSS Scanner Receiver Specifications 24
Table 24: Japan Maximum Radio Frequency Power - All Mode 29
Table 25: FCC Maximum Radio Frequency Power - All Mode 30
Table 26: ISED Maximum Radio Frequency Power - All Mode 31
Table 27: Europe Maximum Radio Frequency Power - All Mode 32
Table 28: Taping Specifications 35

Downloaded from Arrow.com.

About This Document

Murata's Type 1WL is a small and high-performance module based on Semtech LR1110 + STMicro STM32WB55VGY6 + Airoha MT3333AV chipset, supporting LoRa + IEEE 802.11/b/g/n Wi-Fi Passive Scanner + Bluetooth 5.3 LE + GNSS. This datasheet describes Type 1WL module in detail.

Please be aware that an important notice concerning availability, standard warranty and use in critical applications of Murata products and disclaimers thereto appears at the end of this specification sheet.

Audience & Purpose

Intended audience includes any customer looking to integrate this module into their product, specifically RF, hardware, software, and systems engineers.

Document Conventions

Table 1 describes the document conventions.

Table 1: Document Conventions

Conventions	Description
	Warning Note Indicates very important note. Users are strongly recommended to review.
	Info Note Intended for informational purposes. Users should review.
	Menu Reference Indicates menu navigation instructions. **Example**: Insert→Tables→Quick Tables→Save Selection to Gallery
	External Hyperlink This symbol indicates a hyperlink to an external document or website. **Example**: Embedded Artists AB Click on the text to open the external link.
	Internal Hyperlink This symbol indicates a hyperlink within the document. **Example**: Scope Click on the text to open the link.
`Console input/output or code snippet`	**Console I/O or Code Snippet** This text ***Style*** denotes console input/output or a code snippet.
`# Console I/O comment` `// Code snippet comment`	**Console I/O or Code Snippet Comment** This text ***Style*** denotes a console input/output or code snippet comment. • Console I/O comment (preceded by "#") is for informational purposes only and does not denote actual console input/output. • Code Snippet comment (preceded by "//") may exist in the original code.

Downloaded from Arrow.com.

1 Scope

This specification applies to Geolocation module for LoRa + Wi-Fi + BLE + GNSS.

2 Features & Benefits

2.1 Features

- STM32WB MCU wireless microcontroller
  - Cortet-M4, RAM: 256KB, Flash: 1MB
  - Bluetooth Low Energy transceiver
- SEMTECH LR1110 RF IC
  - LoRa Transceiver
  - Wi-Fi Passive Scanner
  - Multi-Constellation GNSS Scanner (GPS & BeiDou)
- Airoha MT3333 GNSS chipset
  - High-performance, multi-Constellation GNSS solution
- Low power consumption
- TCXO for maximum frequency accuracy
- Structure: Metal case + PCB (Lead Free Module)
- Weight: 1200 mg
- MSL: 3
- LGA Surface-mount type
- RoHS compliant

Product name	LBEU5ZZ1WL-633
Technology	LoRa, BLE, Wi-Fi Scanner, GNSS
Peripheral I/F	UART, USB, SPI, I2C, ADC, GPIOs
Dimensions	17.50 x 17.00 x 2.15 mm (max)
Operating Temperature	- 30 °C to 85 °C
Regulatory certification	FCC, ISED, CE, JRL

2.2 Benefits

- Open MCU design for user's Application code
- Small/highly integrated Geolocation module available in the market
- Allows simple RF design with minimum additional components required
- Simplifies PCB design as fewer layers are required on the final PCB

Downloaded from Arrow.com.

- Single solution for both Indoor & Outdoor Geolocation use cases
- Standalone multi-constellation GNSS solution for High-performance & accuracy
- The module's RF certification can be reused for end-product certification
- Quick time to market solution
- Build/Develop applications with the extensive STMicro tools

3 Ordering Information

Table 2 shows the ordering information for Type 1WL module.

Table 2: Ordering Information

Ordering Part Number	Description
LBEU5ZZ1WL-633	Module order
LBEU5ZZ1WL-633SMP	Sample module order (If module samples are not available through distribution, contact Murata referencing this part number)
LBEU5ZZ1WL-633EVK	Type 1WL EVK

Downloaded from Arrow.com.

4 Block Diagram

The Type 1WL block diagram is presented in **Figure 1**.

Figure 1: Block Diagram

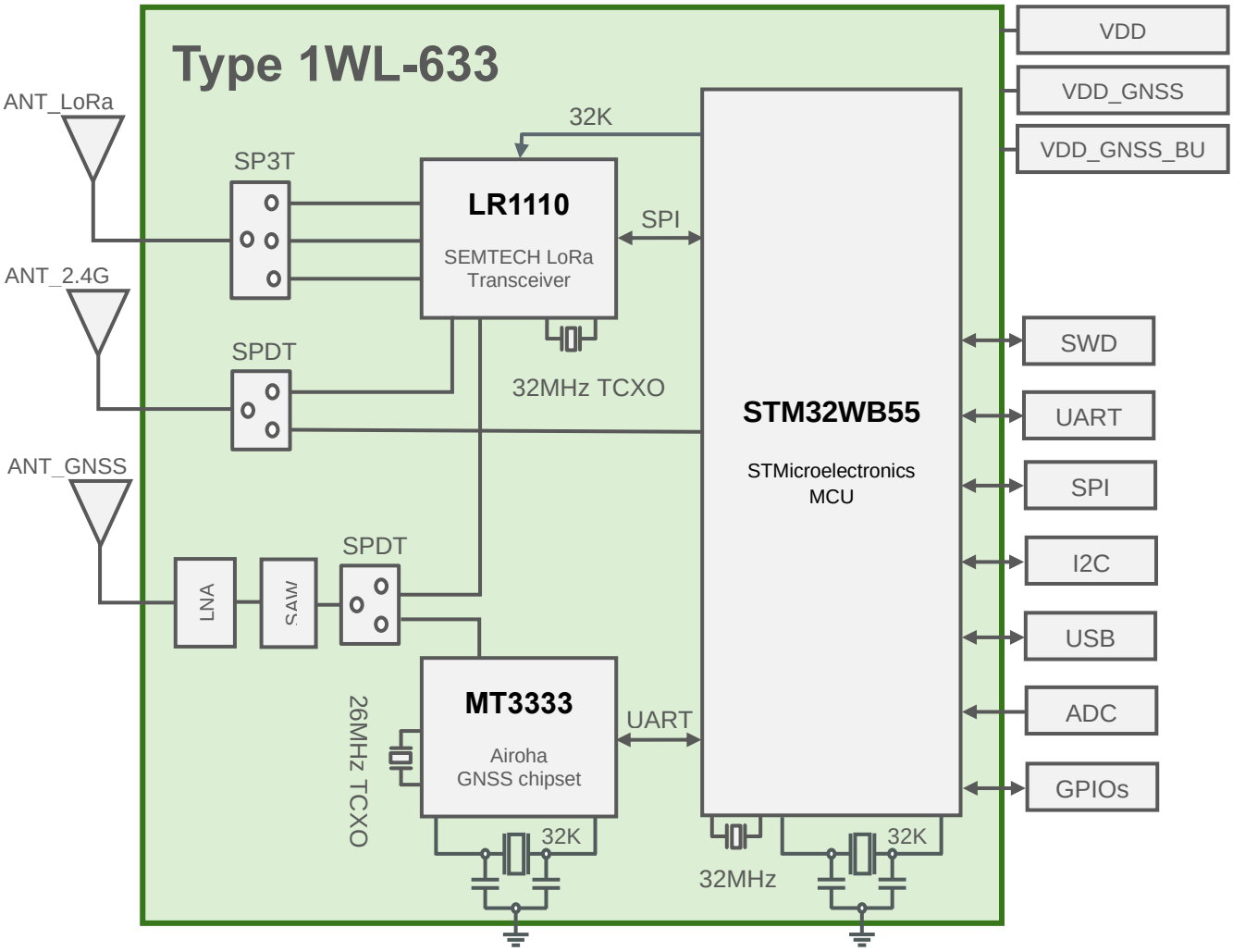

Downloaded from Arrow.com.

5 Certification Information

This section has information about radio and Bluetooth certification.

5.1 Radio Certification

The radio certification Application test FW version is 1.3-0; BLE stack version is 1.13.0; LR1110 firmware version is 0x0307. **Table 3** shows the transmit power required for each region.

Table 3: Transmit Power Limit

Country	ID	Tx Power Limit
USA (FCC)	VPYLB1WL	LoRa: 22dBm setting; BLE: max power (setting 31)
Canada (ISED)	772C-LB1WL	LoRa: 22dBm setting; BLE: max power (setting 31)
Europe	EN 300328 V2.2.2, EN 300220-2 V3.2.1, EN 303413 V1.2.1 test report is prepared.	LoRa: 14dBm setting; BLE: max power (setting 31)
Japan	Certificate of Construction Type based on Japanese Radio Law. R 218-220026	LoRa: 13dBm setting; BLE: max power (setting 31)

5.2 Bluetooth Qualification

- QDID: 202884
- Set Bluetooth Tx Power to Class 1.5.
- For PICS for supported Bluetooth functions refer to Bluetooth SIG site.

Downloaded from Arrow.com.

6 Dimensions, Markings and Terminal Configurations

This section has information on dimensions, marking, and terminal configurations for Type 1WL.

Figure 2: Dimensions, Markings, and Terminal Configurations

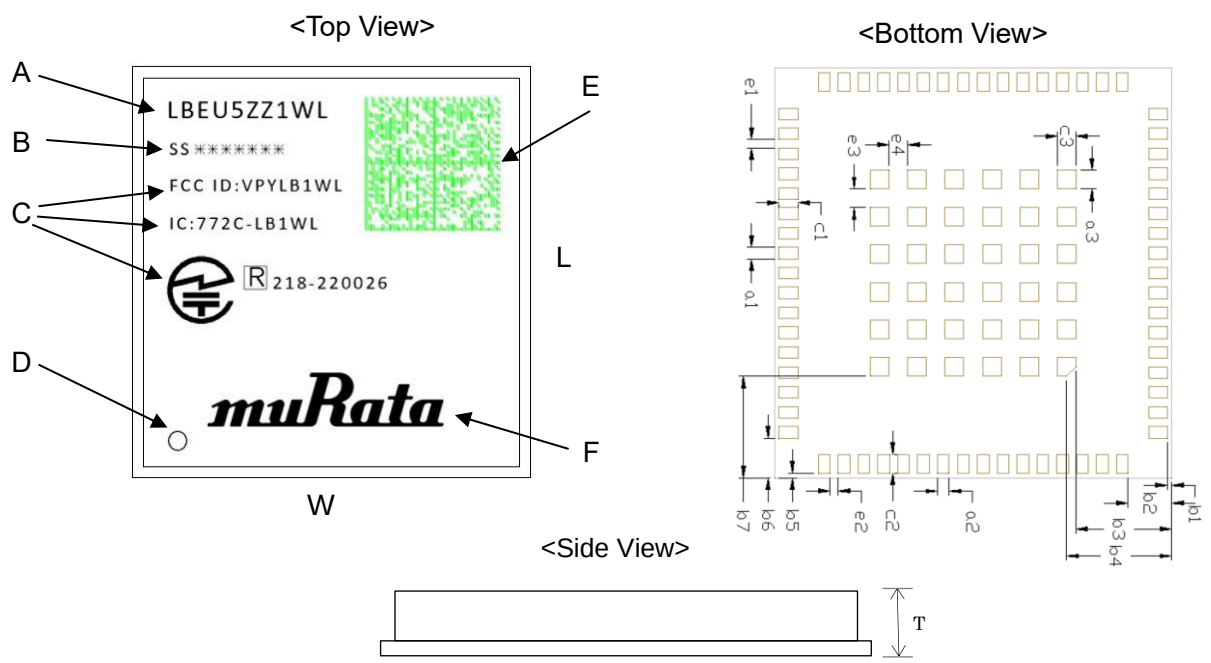

Table 4: Markings

Marking	Meaning
A	Module Type
B	Production Process Number
C	Certification ID
D	Pin 1 Marking
E	2D code
F	Murata Logo

Table 5: Dimensions

Mark	Dimensions (mm)	Mark	Dimensions (mm)	Mark	Dimensions (mm)	Mark	Dimensions (mm)
L	17.5 ± 0.1	W	17.0 ± 0.1	T	2.15 max	a1	0.5 ± 0.1
a2	0.5 ± 0.1	a3	0.8 ± 0.1	b1	0.2 ± 0.1	b2	1.875 ± 0.1
b3	4.3 ± 0.1	b4	4.5 ± 0.1	b5	0.2 ± 0.1	b6	1.7 ± 0.1
b7	4.35 ± 0.1	c1	0.8 ± 0.1	c2	0.8 ± 0.1	c3	0.8 ± 0.1
e1	0.35 ± 0.1	e2	0.35 ± 0.1	e3	0.8 ± 0.1	e4	0.8 ± 0.1

Downloaded from Arrow.com.

7 Module Pin Descriptions

This section has the Pin descriptions of Type 1WL and pin assignments layout descriptions.

7.1 Pin Assignments

The pin assignment layout (Top View) is shown in **Figure 3**.

Figure 3: Pin Assignments (Top View)

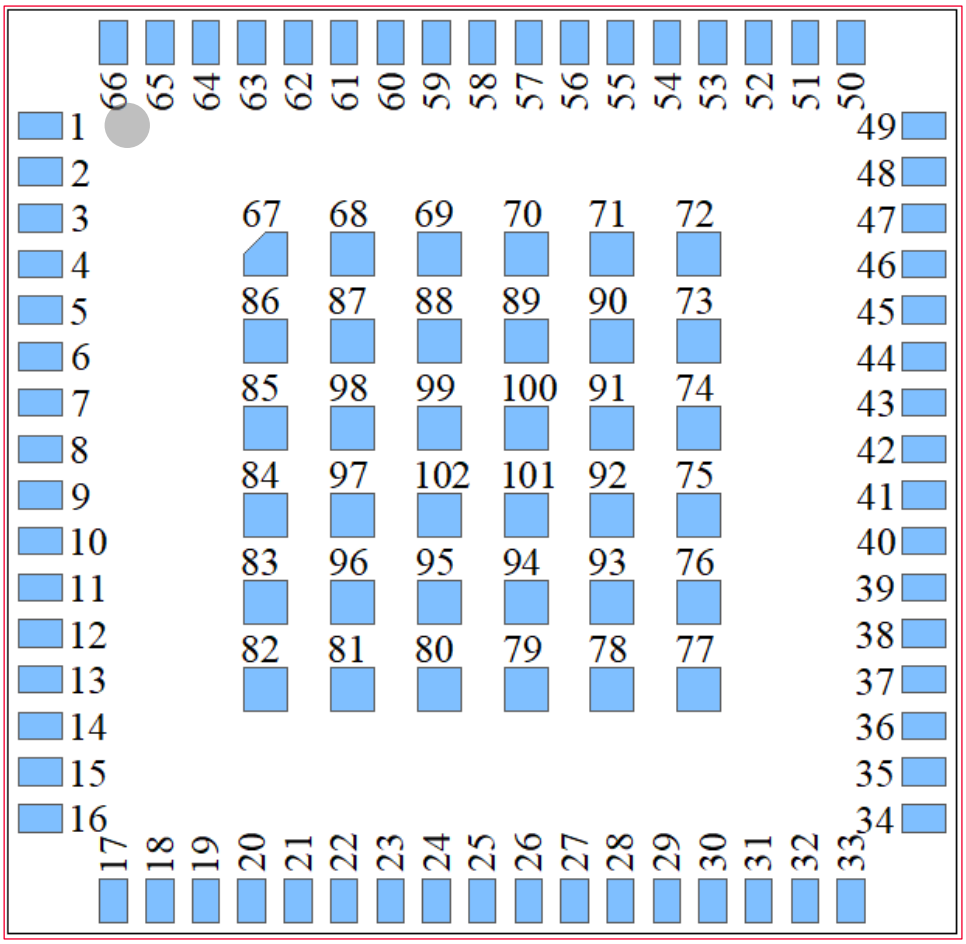

Downloaded from Arrow.com.

Table 6 illustrates the terminal configurations.

Table 6: Terminal Configurations

No.	Terminal Name	No.	Terminal Name	No.	Terminal Name
1	GND	29	GPIO4	57	LPUART_RTS
2	NRST_MCU	30	VDD_GNSS	58	PWM_CTRL
3	I2C_INT1	31	GND	59	GPIO8
4	I2C_SCL	32	VDD_GNSS_BU	60	GPIO9
5	I2C_SDA	33	GND	61	LPUART_TX
6	I2C_POWER	34	GND	62	LPUART_RX
7	GPIO1	35	EN_VDD_GNSS	63	USR_ADC
8	BOOT0	36	EN_VDD_GNSS_BU	64	GPIO10
9	GND	37	GND	65	I2C_INT2
10	ANT_2G4	38	USART_TX_GNSS	66	GND
11	GND	39	USART_RX_GNSS	67-102	GND
12	GPIO2	40	NRST_GNSS		
13	SWDIO	41	GNSS_PPS		
14	SWCLK	42	GND		
15	SWO	43	GND		
16	GND	44	ANT_GNSS		
17	GND	45	GND		
18	GND	46	VBAT_SENSE		
19	VDD	47	GPIO5		
20	VDD	48	LPUART_CTS		
21	GND	49	GND		
22	GPIO3	50	GND		
23	USB_DP	51	NRST_LORA		
24	USB_DM	52	GND		
25	SPI_CS	53	ANT_LORA		
26	SPI_MOSI	54	GND		
27	SPI_MISO	55	GPIO6		
28	SPI_SCK	56	GPIO7		

7.2 Pin Descriptions

Table 7 describes Type 1WL Pins.

Table 7: Pin Descriptions

No.	Pin name	Type	Connection to IC Pin Name[1]	Description
1	GND	GND	-	Ground
2	NRST_MCU	I	STM32: NRST	STM32 reset signal, active low
3	I2C_INT1	I/O	STM32: PC2	Interrupt for I2C sensor
4	I2C_SCL	I/O	STM32: PB8	I2C clock
5	I2C_SDA	I/O	STM32: PB7	I2C data
6	I2C_POWER	I/O	STM32: PB9	Power for I2C sensor
7	GPIO1	I/O	STM32: PD14	General purpose I/O
8	BOOT0	I	STM32: PH3-BOOT0	STM32 BOOT0 pin. At start up, BOOT0 pin and BOOT1 option bit are used to select three boot option (section 7.3).

Downloaded from Arrow.com.

No.	Pin name	Type	Connection to IC Pin Name[1]	Description
9	GND	GND	-	Ground
10	ANT_2G4	RF	-	2.4GHz antenna (BLE/ Wi-Fi)
11	GND	GND	-	Ground
12	GPIO2	I/O	STM32: PD13	General purpose I/O
13	SWDIO	I/O	STM32: PA13	SWD interface data pin
14	SWCLK	I/O	STM32: PA14	SWD interface clock pin
15	SWO	I/O	STM32: PB3	SWD interface debug pin
16	GND	GND	-	Ground
17	GND	GND	-	Ground
18	GND	GND	-	Ground
19	VDD	Power	-	Power supply for STM32 and LR1110
20	VDD	Power	-	Power supply for STM32 and LR1110
21	GND	GND	-	Ground
22	GPIO3	I/O	STM32: PD7	General purpose I/O
23	USB_DP	I/O	STM32: PA12	USB interface data positive
24	USB_DM	I/O	STM32: PA11	USB interface data minus
25	SPI_CS	I/O	STM32: PD2	SPI interface chip selection
26	SPI_MOSI	I/O	STM32: PD4	SPI interface master output slave input
27	SPI_MISO	I/O	STM32: PD3	SPI interface master input slave output
28	SPI_SCK	I/O	STM32: PD1	SPI interface clock
29	GPIO4	I/O	STM32: PD0	General purpose I/O
30	VDD_GNSS	Power	-	Main Power supply for GNSS IC
31	GND	GND	-	Ground
32	VDD_GNSS_BU	Power	-	Back-up Power supply for GNSS IC
33	GND	GND	-	Ground
34	GND	GND	-	Ground
35	EN_ VDD_GNSS	I/O	STM32: PC10	Enable pin GNSS power supply
36	EN_ VDD_GNSS_BU	I/O	STM32: PA15	Enable pin GNSS back-up power supply
37	GND	GND	-	Ground
38	USART_TX_GNSS	I/O	MT3333: TX0 STM32: PA10	USART to GNSS IC. Reserved for internal usage.
39	USART_RX_GNSS	I/O	MT3333: RX0 STM32: PA9	USART to GNSS IC. Reserved for internal usage.
40	NRST_GNSS	I	MT3333: HRST_B STM32: PE4	MT3333 system reset. Reserved for internal usage.
41	GNSS_PPS	I/O	MT3333: PPS(GPIO7) STM32: PB15	PPS clock from MT3333. Reserved for internal usage.
42	GND	GND	-	Ground
43	GND	GND	-	Ground
44	ANT_GNSS	RF	-	GNSS antenna
45	GND	GND	-	Ground
46	VBAT_SENSE	AI/O	STM32: PA1	Measure battery voltage
47	GPIO5	I/O	STM32: PC9	General purpose I/O
48	LPUART_CTS	I/O	STM32: PB13	LPUART of STM32
49	GND	GND	-	Ground
50	GND	GND	-	Ground
51	NRST_LORA	I	LR1110: NRESET STM32: PB5	LR1110 reset, active low. Reserved for internal usage.
52	GND	GND	-	Ground
53	ANT_LORA	RF	-	LoRa antenna
54	GND	GND	-	Ground
55	GPIO6	I/O	STM32: PD6	General purpose I/O

Downloaded from Arrow.com.

No.	Pin name	Type	Connection to IC Pin Name[1]	Description
56	GPIO7	I/O	STM32: PD10	General purpose I/O
57	LPUART_RTS	I/O	STM32: PB12	LPUART of STM32
58	PWM_CTRL	I/O	STM32: PB6	Load control
59	GPIO8	I/O	STM32: PC4	General purpose I/O
60	GPIO9	I/O	STM32: PC5	General purpose I/O
61	LPUART_TX	I/O	STM32: PB11	LPUART of STM32
62	LPUART_RX	I/O	STM32: PB10	LPUART of STM32
63	USR_ADC	AI/O	STM32: PA0	Analog IO
64	GPIO10	I/O	STM32: PC11	General purpose I/O
65	I2C_INT2	I/O	STM32: PC3	Interrupt for I2C sensor
66	GND	GND	-	Ground
67-102	GND	GND	-	Ground

7.3 Configuration Pins

Table 8 shows the boot modes configuration for Type 1WL.

Table 8: Boot modes configuration

BOOT0 pin	BOOT1 option bit	BOOT modes
0	x	Boot from user flash
1	0	Boot from system memory
1	1	Boot from embedded SRAM

8 Absolute Maximum Ratings

The absolute maximum ratings are shown in **Table 9.**

Table 9: Absolute and Maximum Ratings

Parameter		Minimum	Maximum	Unit
Storage Temperature		-40	+85	°C
Supply Voltage	VDD	-0.3	3.6	V
	VDD_GNSS	-0.3	4.3	V
	VDD_GNSS_BU	-0.3	4.3	V

Stresses in excess of the absolute ratings may cause permanent damage. Functional operation is not implied under these conditions. Exposure to absolute ratings for extended periods of time may adversely affect reliability. No damage assuming only one parameter is set at limit at a time with all other parameters are set within operating condition.

9 Operating Conditions

This section describes the operating conditions.

9.1 Operating Conditions

Downloaded from Arrow.com.

The operating conditions are shown in **Table 10**.

Table 10: Operating Conditions

Parameter		Minimum	Typical	Maximum	Unit
Operating Temperature		-30		+85	°C
Operating Voltage	VDD	3.0		3.3	V
	VDD_GNSS	2.8	3.3	4.3	V
	VDD_GNSS_BU	2.0	3.3	4.3	V

Operation beyond the recommended operating conditions is neither recommended nor guaranteed.

9.2 Digital I/O Requirements

Table 11 shows the digital I/O characteristics of Type 1WL.

Table 11: Digital I/O Characteristics

Symbol	Parameter	Condition	Minimum	Typical	Maximum	Unit
V_{IH}	Input high voltage		0.7*VDD			V
V_{IL}	Input low voltage				0.3*VDD	V
V_{HYS}	Input hysteresis			200		mV
V_{OH}	Output high voltage	TTL port	2.4			V
V_{OL}	Output low voltage				0.4	V
R_{PU}	Weak pull-up equivalent resistor (1)	$V_{IN} = V_{SS}$	25	40	55	kΩ
R_{PD}	Weak pull-down equivalent resistor (1)	$V_{IN} = V_{DDIOx}$	25	40	55	kΩ
C_{IO}	I/O pin capacitance	-	-	5	-	pF

1. Pull-up and pull-down resistors are designed with a true resistance in series with a switchable PMOS/NMOS. This PMOS/NMOS contribution to the series resistance is minimal (~10% order).

9.3 Package Thermal Conditions

The package thermal conditions are as below:

- **RΨjt :** TBD℃/W
- **RΨjt** = (Tj - Tt)/P

Tj: Junction temperature (°C), Tt: Top temperature (°C), P: Total Power Consumption (W)

Downloaded from Arrow.com.

Figure 4: Package Thermal Conditions

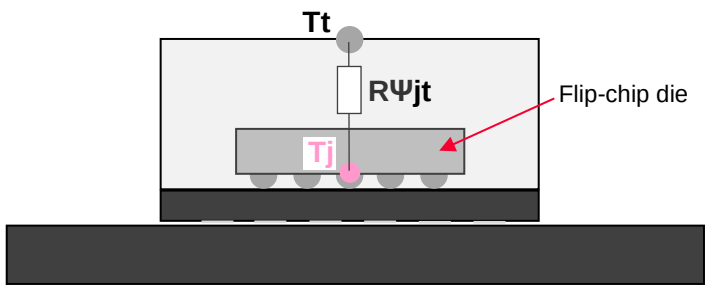

10 Power Sequence

10.1 Power-On Sequence

10.2 Power-On Sequence

This section describes the power-on sequences along with their parameters.

- VDD must be good (90%) before assert NRST_MCU (= 0 to 1).

Figure 5: Power-On Sequence Graph

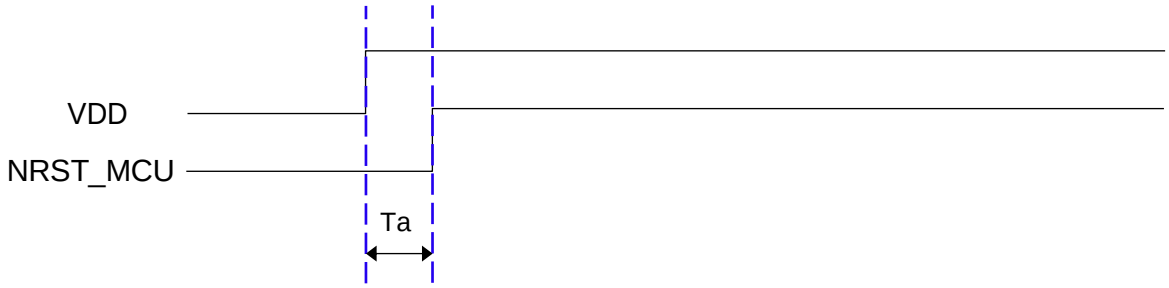

Table 12: Parameters for Power-On Sequence Graph

Symbol	Parameter	Minimum	Typical	Maximum	Unit
Ta	VDD to NRST_MCU time	TBD			ms

10.3 Power-Off Sequence

This section describes the power-off sequences along with their parameters.

TBD

Downloaded from Arrow.com.

11 Host Interface Specification

11.1 USB Specifications

The USB interface is fully compliant with the USB specification version 2.0 and is USB-IF certified (for Full-speed device operation).

For more details, please refer to STM32WB55 data sheet.

Table 13: USB electrical characteristics

Symbol	Parameter	Conditions (1)	Minimum	Typical	Maximum	Unit
V_{DDUSB}	USB transceiver operating voltage		3.0(2)	-	3.6	V
$T_{crystal_less}$	USB crystal-less operation temperature		-15	-	85	°C
R_{PUI}	Embedded USB_DP pull-up value during idle		900	1250	1600	Ω
R_{PUR}	Embedded USB_DP pull-up value during reception		1400	2300	3200	Ω
Z_{DRV} (3)	Output driver impedance (4)	Driving high and low	28	36	44	Ω

1. TA = -40 to 125 °C unless otherwise specified.
2. The STM32WB55xx USB functionality is ensured down to 2.7 V, but the full USB electrical characteristics are degraded in the 2.7 to 3.0 V voltage range.
3. Guaranteed by design.
4. No external termination series resistors are required on USB_DP (D+) and USB_DM (D-); the matching impedance is already included in the embedded driver.

11.2 LPUART Specifications

The LPUARTs support half duplex single wire communication and modem operations (CTS/RTS), allowing multiprocessor communication.

The LPUART have a clock domain independent from the CPU clock and can wakeup the system from Stop mode using baudrates up to 220 Kbaud.

Only a 32.768 kHz clock (LSE) is needed to allow LPUART communication up to 9600 baud. Therefore, even in Stop mode, the LPUARTs can wait for an incoming frame while having an extremely low energy consumption. Higher speed clock can be used to reach higher baudrates.

For more details, please refer to STM32WB55 data sheet.

11.3 I2C Specifications

The I2C bus interface handles communications between the microcontroller and the serial I2C bus. It controls all I2C bus-specific sequencing, protocol, arbitration and timing.

For more details, please refer to STM32WB55 data sheet.

Table 14: I2C Implementation

I2C features (1)	I2C
Standard-mode (up to 100 kbit/s)	X
Fast-mode (up to 400 kbit/s)	X
Fast-mode Plus with 20mA output drive I/Os (up to 1 Mbit/s)	X
Programmable analog and digital noise filters	X
SMBus/PMBus hardware support	X

Downloaded from Arrow.com.

I2C features (1)	I2C
Independent clock	X
Wakeup from Stop 0 / Stop 1 mode on address match	X
Wakeup from Stop 2 mode on address match	-

1. X: supported, -: not supported.

Table 15: I2C analog filter characteristic

Symbol	Parameter	Minimum	Maximum	Unit
t_{AF}	Maximum pulse width of spikes that are suppressed by the analog filter	50(1)	260(2)	ns

1. Spikes with widths below $t_{AF(min)}$ are filtered.
2. Spikes with widths above $t_{AF(max)}$ are not filtered.

11.4 SPI Specifications

The SPI interface allow communication up to 32 Mbit/s in master and up to 24 Mbit/s in slave modes, in half-duplex, full-duplex and simplex modes. The 3-bit prescaler gives 8 master mode frequencies and the frame size is configurable from 4 bits to 16 bits. The SPI interfaces support NSS pulse mode, TI mode and Hardware CRC calculation.

For more details, please refer to STM32WB55 data sheet.

11.5 SWD Specifications

The Arm® SWJ-DP interface is embedded, it is a combined JTAG and serial wire debug port that enables either a serial wire debug or a JTAG probe to be connected to the target.

Debug is performed using only two pins instead of the five required by the JTAG (JTAG pins can then be reused as GPIOs with alternate function): the JTAG TMS and TCK pins are shared with SWDIO and SWCLK, respectively, and a specific sequence on the TMS pin is used to switch between JTAG-DP and SW-DP.

For more details, please refer to STM32WB55 data sheet.

12 DC/RF Characteristics

ALL DC/RF characteristics are defined by following files as shown in **Table 16**. **Figure 7** shows the burst current definition for Type 1WL module.

Table 16: DC/RF Characteristics and Files

Characteristics	Filenames
LoRa	aos-mfg-v1.3-0.elf
BLE	Wireless Firmware version (BLE STACK) 1.13.0, aos-mfg-v1.3-0.elf
Wi-Fi Passive Scan	LR1110 firmware version 0x0307, aos-mfg-v1.3-0.elf
LR1110 GNSS Scan	LR1110 firmware version 0x0307, aos-mfg-v1.3-0.elf
MT3333 GNSS	MT3333_GENERAL_Module_STD_F0.bin, MTK_AllInOne_DA_MT3333_MP.BIN

Downloaded from Arrow.com.

Figure 6: Burst current definition

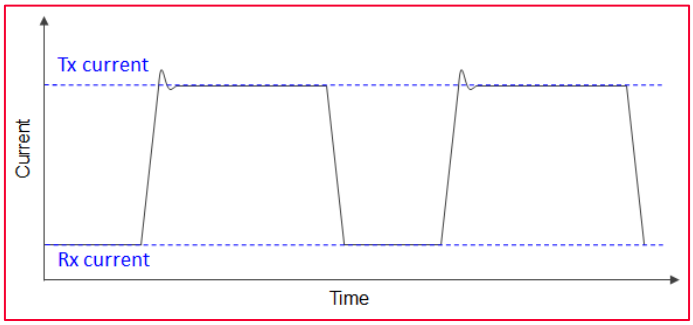

12.1 Sleep Current

Conditions: TBD.

12.2 DC/RF Characteristics for Sub-GHz

Conditions: 25 °C, VDD = 3.3V, Application FW: 1.3-0.

Table 17: Sub-GHz Bands Specifications

Items	Condition	Contents			
Current Consumption		**Minimum**	**Typical**	**Maximum**	**Unit**
Supply current in receiver FSK mode	RxBoost OFF		15.4		mA
	RxBoost ON		17.5		mA
Supply current in receiver LoRa mode, RxBoost OFF	BW=125KHz, SF = 7		TBD		mA
	BW=125KHz, SF = 12		6.8		mA
	BW=250KHz, SF = 7		11.8		mA
	BW=250KHz, SF = 12		7.1		mA
	BW=500KHz, SF = 7		16.1		mA
	BW=500KHz, SF = 12		TBD		mA
Supply current in receiver LoRa mode, RxBoost ON	BW=125KHz, SF = 7		TBD		mA
	BW=125KHz, SF = 12		9.0		mA
	BW=250KHz, SF = 7		14.1		mA
	BW=250KHz, SF = 12		9.3		mA
	BW=500KHz, SF = 7		18.3		mA
	BW=500KHz, SF = 12		TBD		mA
Supply current in LoRa transmitter mode	LP PA 14dBm setting		28		mA
	HP PA 22dBm setting		118		mA
Tx Characteristics		**Minimum**	**Typical**	**Maximum**	**Unit**
TX Output Power	LP PA 14dBm setting	10.5	13.5		dBm
	HP PA 22dBm setting	18	21		dBm
RF Output Power Stability vs Voltage Supply (3.0~3.3V)	LP PA Operating		0.1		dB
	HP PA Operating		0.6		dB

Downloaded from Arrow.com.

Items	Condition	Contents			
RF Output Power Stability vs Temperature (-40~+85°C)	LP PA Operating		1.3		dB
	HP PA Operating		1.3		dB
TX Power Range	Programmable in steps of -1dB from maximum TX power		31		steps
Rx Characteristics		**Minimum**	**Typical**	**Maximum**	**Unit**
Sensitivity 2-FSK, RxBoost OFF	BRF = 4.8 kb/s, FDA = 5 kHz, BWF = 20 kHz		-116		dBm
Sensitivity 2-FSK, RxBoost ON	BRF = 4.8 kb/s, FDA = 5 kHz, BWF = 20 kHz		-117		dBm
Sensitivity LoRa, RxBoost OFF	BWL = 125 kHz, SF = 7		-125		
	BWL = 125 kHz, SF = 12		-139		
	BWL = 250 kHz, SF = 7		-122		
	BWL = 250 kHz, SF = 12		-136		
	BWL = 500 kHz, SF = 7		-118		
	BWL = 500 kHz, SF = 12		TBD		
Sensitivity LoRa, RxBoost ON	BWL = 125 kHz, SF = 7		-127		
	BWL = 125 kHz, SF = 12		-141		
	BWL = 250 kHz, SF = 7		-124		
	BWL = 250 kHz, SF = 12		-138		
	BWL = 500 kHz, SF = 7		-120		
	BWL = 500 kHz, SF = 12		TBD		

12.3 DC/RF Characteristics for Wi-Fi Passive Scanner

Conditions: 25 °C, VDD = 3.3V, Application FW: 1.3-0.

Table 18: Wi-Fi Passive Scanner Specifications

Items	Condition	Contents			
Wi-Fi Passive Scan Characteristics		**Minimum**	**Typical**	**Maximum**	**Unit**
RX input frequency	Wi-Fi channels	2412	-	2484	MHz
Supply Current in Wi-Fi scan mode	Preamble detect phase		TBD		mA
	Capture phase		TBD		mA
	Processing phase		TBD		mA
Wi-Fi sensitivity for Wi-Fi 802.11 b, DSSS	DBPSK, DR = 1Mb/s		-93		dBm
Wi-Fi sensitivity for Wi-Fi 802.11 g, OFDM, 20MHz channel spacing	BPSK, CR = 1/2, DR = 6 Mb/s		-87		dBm
Wi-Fi sensitivity for Wi-Fi 802.11 n, OFDM, 20MHz channel spacing, short guard interval	BPSK, CR = 1/2, DR = 7.2 Mb/s		-86		dBm

12.4 DC/RF Characteristics for Bluetooth Low Energy

Downloaded from Arrow.com.

Items	Contents
Bluetooth specification (power class)	Version 5.3 (LE)
Channel frequency (spacing)	2402 to 2480 MHz (2 MHz)
Number of RF Channel	40

12.4.1 1 Mbps PHY Condition

Conditions: 25 °C, VDD = 3.3V, Application FW: 1.3-0.

Table 19: BLE 1 Mbps PHY Condition

Items	Contents			
Current Consumption	**Minimum**	**Typical**	**Maximum**	**Unit**
• Tx mode, Max output power		13.3		mA
• Rx mode		10.8		mA
Tx Characteristics	**Minimum**	**Typical**	**Maximum**	**Unit**
Center Frequency	2402		2480	MHz
Channel Spacing		2		MHz
Number of RF channel		40		
Max Output power		5		dBm
In-band emission				
• f_{TX}+/-2 MHz			-20	dBm
• f_{TX}+/-[3+n] MHz; n = 0,1,2…			-30	dBm
Modulation Characteristics				
• $\Delta f1_{avg}$	225		275	kHz
• $\Delta f2_{max}$ (at 99.9%)	185			kHz
• $\Delta f2_{avg}$ / $\Delta f1_{avg}$	0.8			
Stable Modulation Characteristics				
• $\Delta f1_{avg}$	247.5		252.5	kHz
• $\Delta f2_{max}$ (at 99.9%)	185			kHz
• $\Delta f2_{avg}$ / $\Delta f1_{avg}$	0.8			
Carrier frequency offset and drift				
• Frequency offset (f_n); n = 0,1,2,3…k	-150		150	kHz
• Frequency drift ($\lvert f_0-f_n \rvert$); n = 2,3,4…k			50	kHz
• Drift rate				
• $\lvert f_1-f_0 \rvert$			20	kHz
• $\lvert f_n-f_{n-5} \rvert$; n = 6,7, 8,…k			20	kHz
Spurious Emissions				
• 30 - 47 MHz (BW = 100 kHz)			-36	dBm
• 47 - 74 MHz (BW = 100 kHz)			-54	dBm
• 74 - 87.5 MHz (BW = 100 kHz)			-36	dBm
• 87.5 - 118 MHz (BW = 100 kHz)			-54	dBm
• 118 - 174 MHz (BW = 100 kHz)			-36	dBm

Downloaded from Arrow.com.

Items	Contents			
• 174 - 230 MHz (BW = 100 kHz)			-54	dBm
• 230 - 470 MHz (BW = 100 kHz)			-36	dBm
• 470 - 862 MHz (BW = 100 kHz)			-54	dBm
• 862 - 1000 MHz (BW = 100 kHz)			-36	dBm
• 1000 - 12750 MHz (BW = 1 MHz)			-30	dBm
Rx Characteristics	**Minimum**	**Typical**	**Maximum**	**Unit**
Receiver sensitivity (PER < 30.8%)		-92	-70	dBm
Maximum input signal level (PER < 30.8%)	0			dBm
PER Report Integrity (-30 dBm input)	50		65.4	%

12.4.2 2 Mbps PHY Condition

Conditions: 25 °C, VDD = 3.3V, Application FW: 1.3-0.

Table 20: BLE 2 Mbps PHY Condition

Items	Contents			
Current Consumption	**Minimum**	**Typical**	**Maximum**	**Unit**
• Tx mode, Max output power		9.2		mA
• Rx mode		11.4		mA
Tx Characteristics	**Minimum**	**Typical**	**Maximum**	**Unit**
Center Frequency	2402		2480	MHz
Channel Spacing		2		MHz
Number of RF channel		40		
Max Output power		5		dBm
In-band emission				
• f_{TX}+/-4 MHz			-20	dBm
• f_{TX}+/-5 MHz			-20	dBm
• f_{TX}+/-[6+n] MHz; n = 0,1,2…			-30	dBm
Modulation Characteristics				
• $\Delta f1_{avg}$	450		550	kHz
• $\Delta f2_{max}$ (at 99.9%)	370			kHz
• $\Delta f2_{avg}$ / $\Delta f1_{avg}$	0.8			-
Stable Modulation Characteristics				
• $\Delta f1_{avg}$	495		505	kHz
• $\Delta f2_{max}$ (at 99.9%)	370			kHz
• $\Delta f2_{avg}$ / $\Delta f1_{avg}$	0.8			
Carrier frequency offset and drift				
• Frequency offset (f_n); n = 0,1,2,3…k	-150		150	kHz
• Frequency drift ($\lvert f_0-f_n \rvert$); n = 2,3,4…k			50	kHz
• Drift rate				
◦ $\lvert f_1-f_0 \rvert$			20	kHz

Downloaded from Arrow.com.

Items	Contents			
• $\lvert f_n - f_{n-5} \rvert$; n = 6,7, 8,…k			20	kHz
Spurious Emissions				
• 30 - 47 MHz (BW = 100 kHz)			-36	dBm
• 47 - 74 MHz (BW = 100 kHz)			-54	dBm
• 74 - 87.5 MHz (BW = 100 kHz)			-36	dBm
• 87.5 - 118 MHz (BW = 100 kHz)			-54	dBm
• 118 - 174 MHz (BW = 100 kHz)			-36	dBm
• 174 - 230 MHz (BW = 100 kHz)			-54	dBm
• 230 - 470 MHz (BW = 100 kHz)			-36	dBm
• 470 - 862 MHz (BW = 100 kHz)			-54	dBm
• 862 - 1000 MHz (BW = 100 kHz)			-36	dBm
• 1000 - 12750 MHz (BW = 1 MHz)			-30	dBm
Rx Characteristics	**Minimum**	**Typical**	**Maximum**	**Unit**
Receiver sensitivity (PER < 30.8%)		-89	-70	dBm
Maximum input signal level (PER < 30.8%)	0			dBm
PER Report Integrity (-30 dBm input)	50		65.4	%

Downloaded from Arrow.com.

12.5 DC/RF Characteristics for GNSS

12.5.1 LR1110 GNSS Scanner Receiver Specification

Conditions: 25 °C, VDD = 3.3V, Application FW: 1.3-0.

Table 21: LR1110 GNSS Scanner Receiver Specifications

Items	Condition	Contents			
Current Consumption		**Minimum**	**Typical**	**Maximum**	**Unit**
Supply current in GNSS scan mode	Capture phase		TBD		mA
	Processing phase		TBD		mA
RX input frequency	GPS		1575.42		MHz
	BeiDou		1561.1		MHz
GNSS sensitivity	GPS, indoor classification, and strong signal SV capture		-133		dBm
	BeiDou, strong signal SV capture		-130		dBm

12.5.2 MT3333 GNSS Receiver Specification

Conditions: 25 °C, VDD_GNSS = 3.3V, VDD_GNSS_BU = 3.3V. All sensitivity tests use GPS only constellation, Spirent signal generator and are calibrated to take into account the attenuation of cabling.

Table 23: MT3333 GNSS Receiver Specifications

Items	Condition	Contents			
Current Consumption		**Minimum**	**Typical**	**Maximum**	**Unit**
Supply current	Capture phase		TBD		mA
	Processing phase		TBD		mA
RX input frequency	GPS		1575.42		MHz
	BeiDou		1561.1		MHz
GNSS sensitivity	Tracking		TBD		dBm
	Acquisition hot		TBD		dBm
	Acquisition cold		TBD		dBm
TTFF (Time to first fix)	Hot start, -130dBm		TBD		sec
	Hot start, -140dBm		TBD		sec
	Hot start, -150dBm		TBD		sec
	Warm start, -130dBm		TBD		sec
	Warm start, -140dBm		TBD		sec
	Cold start, -130dBm		TBD		sec
	Cold start, -140dBm		TBD		sec
	Full cold start, -130dBm		TBD		sec
	Full cold start, -140dBm		TBD		sec
Accuracy -140dBm	3D RMS		TBD		m

Downloaded from Arrow.com.

Items	Condition	Contents			
	2D RMS		TBD		m

13 Land Pattern

The land pattern (top view, Unit: mm) is shown in **Figure 8.**

Figure 7: Land Pattern

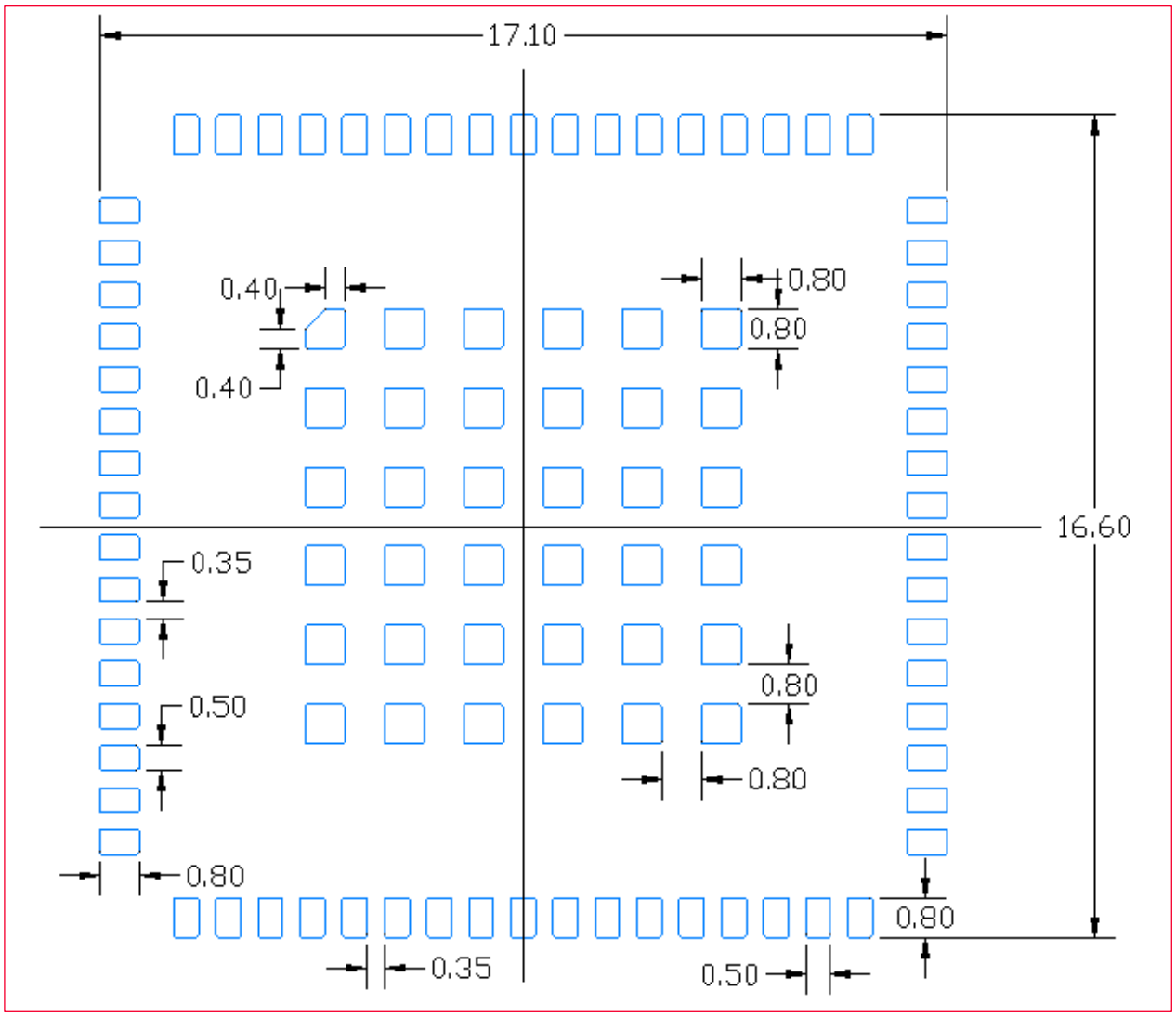

Downloaded from Arrow.com.

14 Reference Circuit

Figure 8: Reference Circuit

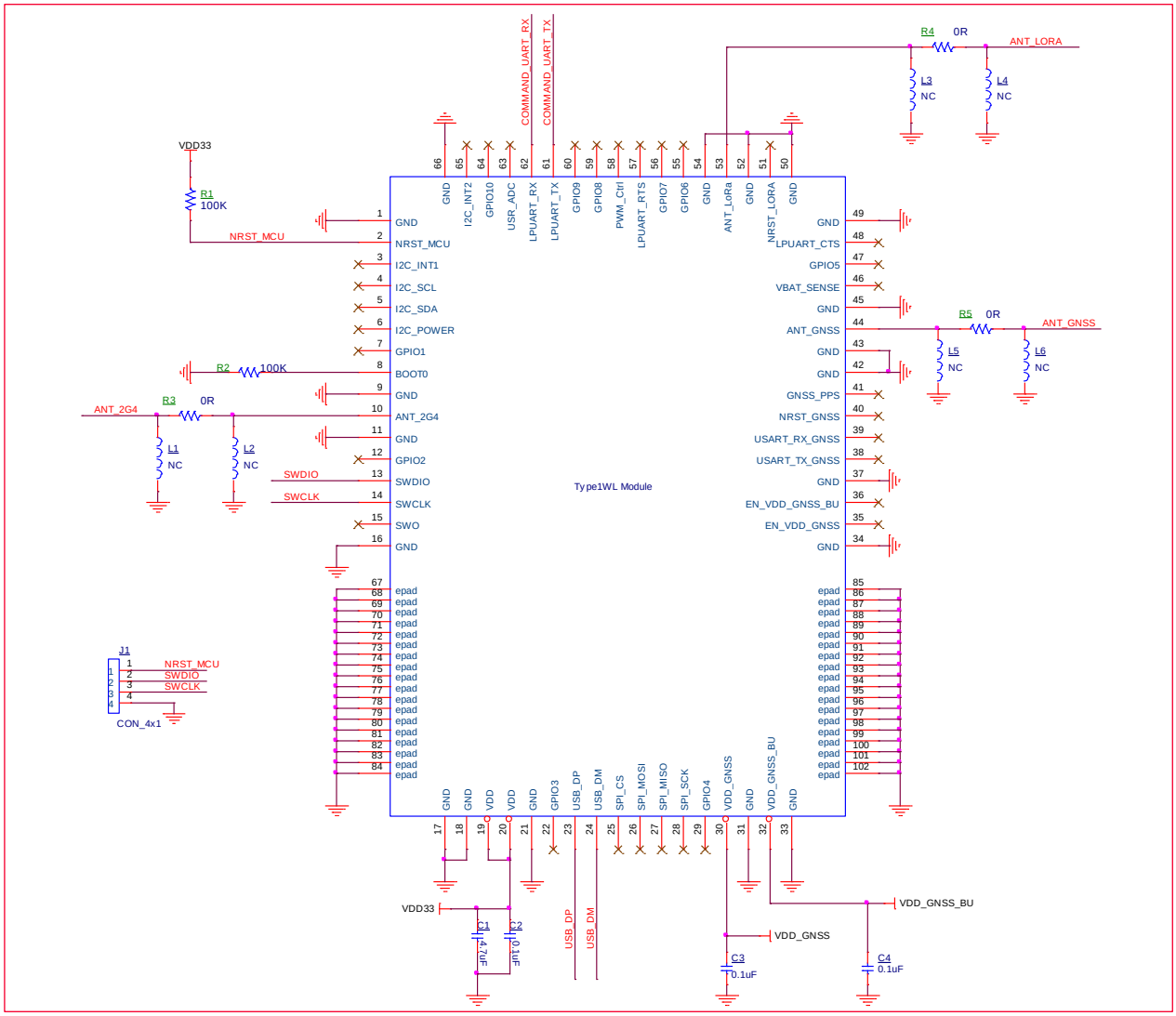

Downloaded from Arrow.com.

15 General Regulatory Certification for LBEU5ZZ1WL

This section contains the following topics:

- Application model part number
- Label
- Package Label
- Country of Origin

15.1 Application Model Part Number

Basically, we apply for “LBEU5ZZ1WL” in each country.

15.2 Label

Figure 10 shows the certification label of Type 1WL module.

Figure 9: Radio Regulatory Certification Label

Since there is no space to describe the notational requirements of each country, we are applying for the notational requirements to be posted in the manual or package.

15.3 Package Label

Figure 11 shows the package label information (Humidity Proof Packing).

Figure 10: Package Label (Humidity proof Packing)

Downloaded from Arrow.com.

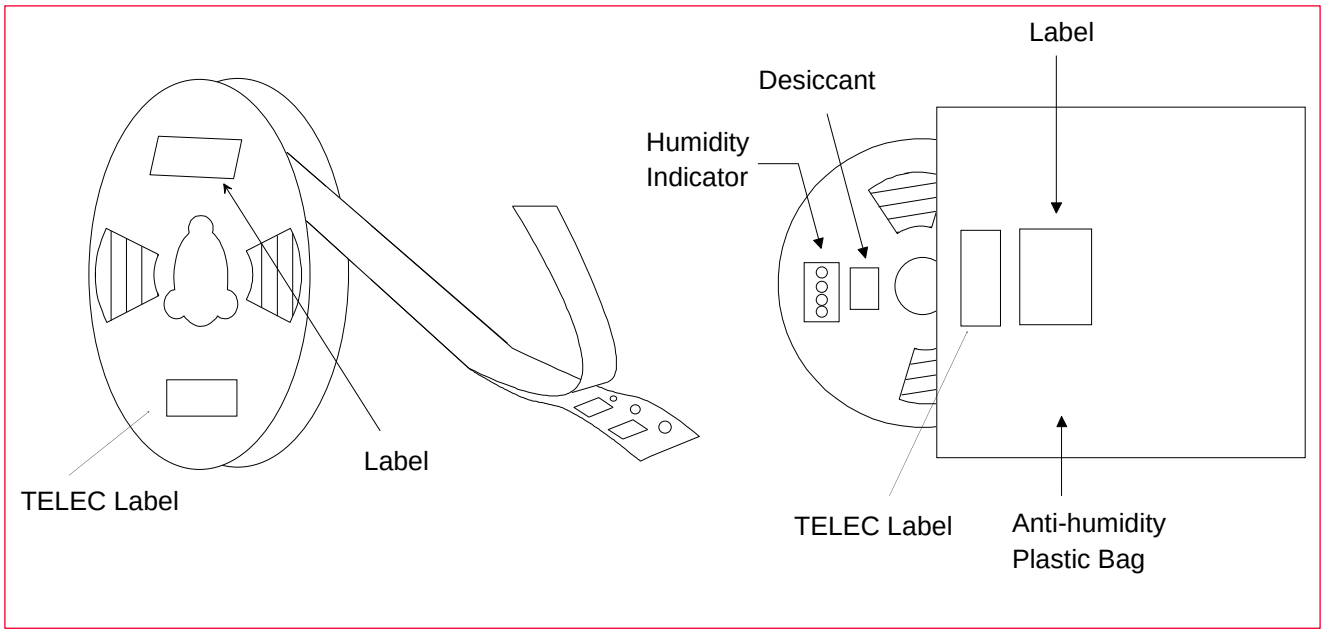

The package label may be attached on one side only.

Package label display example is shown in **Figure 11** エラー! 参照元が見つかりません。.

Figure 11: Package Label Display Example

15.4 Country of Origin

China

SHENZHEN MURATA TECHNOLOGY CO., LTD.

Some countries have applied for two countries, China and Japan, in preparation for future factory changes, but the production site in the delivery specifications is the above-mentioned factory in China.

Downloaded from Arrow.com.

16 Radio Regulatory Certification by Country for LBEU5ZZ1WL

This section includes the following regulatory certifications:

- JRL
- FCC
- ISED
- CE

16.1 JRL

- Manufacturer: Murata Manufacturing Co., Ltd.
- Model or Product Name: LBEU5ZZ1WL
- This module has received "**Certificate of Construction Type**" under the Japanese Radio Law.

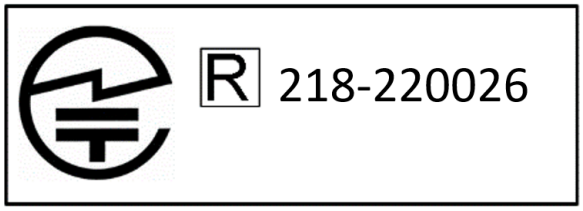

16.1.1 Power Level for Japan

Table 24 shows the maximum radio frequency power to transmit within the operating frequency band.

Table 22: Japan Maximum Radio Frequency Power - All Mode

Band	Maximum Tune Up Tolerance [dBm]
Sub-GHz	12.3 ± 1.5
BLE	5.0 ± 2.0

16.1.2 About Notations

It is recommended that the indication below is described on the product incorporating this module in Japanese. If there is any problem with the indication on the product, we recommend indicating in the user manual or on the package of the product incorporating this module, or electronic display on the product. In the case of the electronic display, it is necessary to describe "using the electronic display" + "how to reach to below indication" in the user manual of the product.

- Recommended Indication

Japanese Version 本製品は、電波法に基づく工事設計認証(認証番号: 218-220026)を受けた特定無線設備を内蔵しています。
English Version This product incorporates specified radio equipment that has received CERTIFICATION for TYPE CERTIFICATION (certification number: 218-220026) based on the Japan Radio Act.

Downloaded from Arrow.com.

16.2 FCC

FCC ID: VPYLB1WL

This module is not directly sold to general end users. Therefore, there is no user manual of module. For the details about this module, please refer to the specification sheet of the module.

This module should be installed in the host device according to the interface specification (installation procedure).

16.2.1 Power Level for FCC

Table 25 エラー! 参照元が見つかりません。エラー! 参照元が見つかりません。shows the maximum radio frequency power to transmit within the operating frequency band.

Table 23: FCC Maximum Radio Frequency Power - All Mode

Band	Maximum Tune Up Tolerance [dBm]
Sub-GHz	21.0 ± 2.0
BLE	5.0 ± 2.0

16.2.2 Information to Include in the User Manual

The following statements must be described on the user manual of the host device of this module.

- Contains Transmitter Module FCC ID: VPYLB1WL or Contains FCC ID: VPYLB1WL

This device complies with part 15 of the FCC Rules. Operation is subject to the following two conditions:

- This device may not cause harmful interference
- This device must accept any interference received, including interference that may cause undesired operation.

If it is difficult to describe this statement on the host product due to the size, please describe in the User's manual.

Downloaded from Arrow.com.

16.3 ISED

HVIN：LBEU5ZZ1WL

PMN：Geolocation Module

IC Number: 772C-LB1WL

This module is not sold to general end users directly. Therefore, there is no user manual of module. For the details about this module, please refer to the specification sheet of the module.

This module should be installed in the host device according to the interface specification (installation procedure).

16.3.1 Information to Display on Host Device and User Manual

16.3.1.1 Information on Host Device

The following information must be indicated on the host device of this module.

- Contains IC: 772C-LB1WL

16.3.1.2 Information in User Manual

The following statements must be described on the user manual of the host device of this module.

English Version This device complies with Industry Canada's applicable licence-exempt RSSs. Operation is subject to the following two conditions: • This device may not cause interference • This device must accept any interference, including interference that may cause undesired operation of the device.
French Version Le présent appareil est conforme aux CNR d'Industrie Canada applicables aux appareils radio exempts de licence. L'exploitation est autorisée aux deux conditions suivantes : • l'appareil ne doit pas produire de brouillage; • l'utilisateur de l'appareil doit accepter tout brouillage radioélectrique subi, même si le brouillage est susceptible d'en compromettre le fonctionnement.

If it is difficult to describe this statement on the host product due to the size, please describe in the User's manual.

16.3.2 Power Level for ISED

Table 25 エラー! 参照元が見つかりません。エラー! 参照元が見つかりません。 shows the maximum radio frequency power to transmit within the operating frequency band.

Table 24: ISED Maximum Radio Frequency Power - All Mode

Band	Maximum Tune Up Tolerance [dBm]
Sub-GHz	21.0 ± 2.0

Downloaded from Arrow.com.

BLE	5.0 ± 2.0

16.4 Europe

Product name: Geolocation Module

Model: LBEU5ZZ1WL

Manufacturer: Murata Manufacturing Co.Ltd.

When shipping final products with this module to Europe, make a self-declaration that the final product complies with European regulations and apply the CE mark.

The following standard reports have been published:

- EN 300 328 V2.2.2
- EN 300 220-2 V3.2.1
- EN 303 413 V1.2.1
- EN IEC 62311:2020

These reports can be leveraged as part of the TCF of the final product. We believe that the conducted test can be used directly as the TCF of the final product. The radiated test as TCF for the final product should be performed by you again with the final product.

16.4.1 Power Level for Europe

Table 25 エラー! 参照元が見つかりません。エラー! 参照元が見つかりません。 shows the maximum radio frequency power to transmit within the operating frequency band.

Table 25: Europe Maximum Radio Frequency Power - All Mode

Band	Maximum Tune Up Tolerance [dBm]
Sub-GHz	13.5 ± 2.0
BLE	5.0 ± 2.0

Downloaded from Arrow.com.

17 Tape and Reel Packing

This section provides the general specifications for tape and reel packing.

17.1 Dimensions of Tape (Plastic Tape)

The dimension of the tape is as follows:

- The corner and ridge radiuses (R) of inside cavity are 0.3 mm maximum.
- Cumulative tolerance of 10 pitches of the sprocket hole is +/-0.15 mm
- Measuring of cavity positioning is based on cavity center in accordance with JIS/IES standard.

Figure 12 is a graphical representation of the tape dimension (plastic tape).

Figure 12: Dimensions of Tape (Plastic tape)

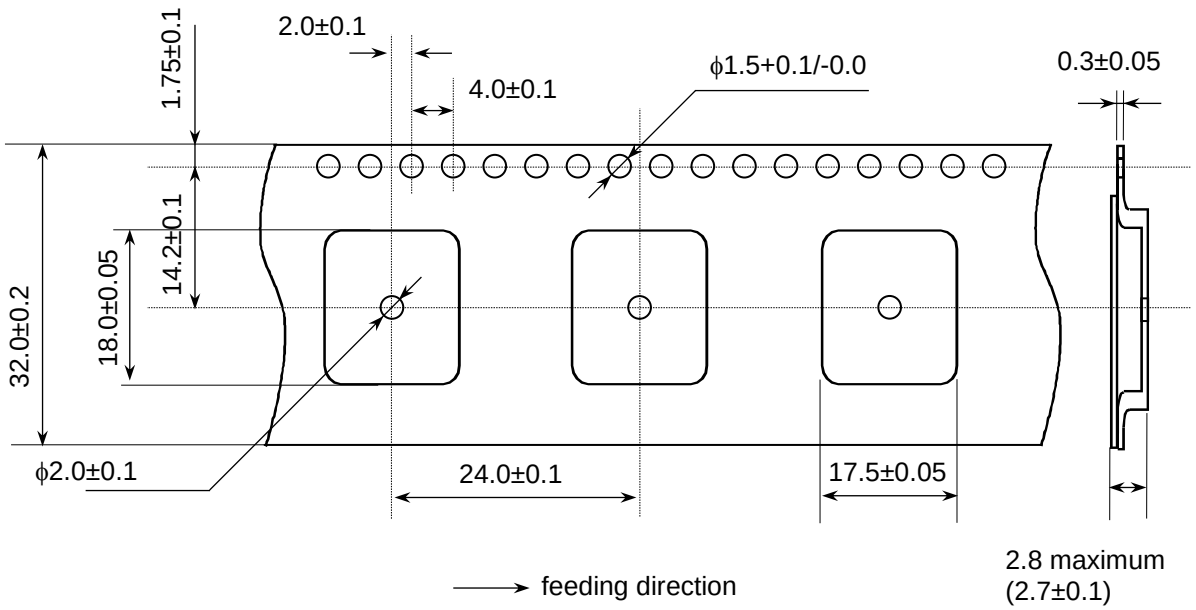

Downloaded from Arrow.com.

17.2 Dimensions of Reel

Figure 13 shows the reel dimensions.

Figure 13: Dimensions of Reel (Unit: mm)

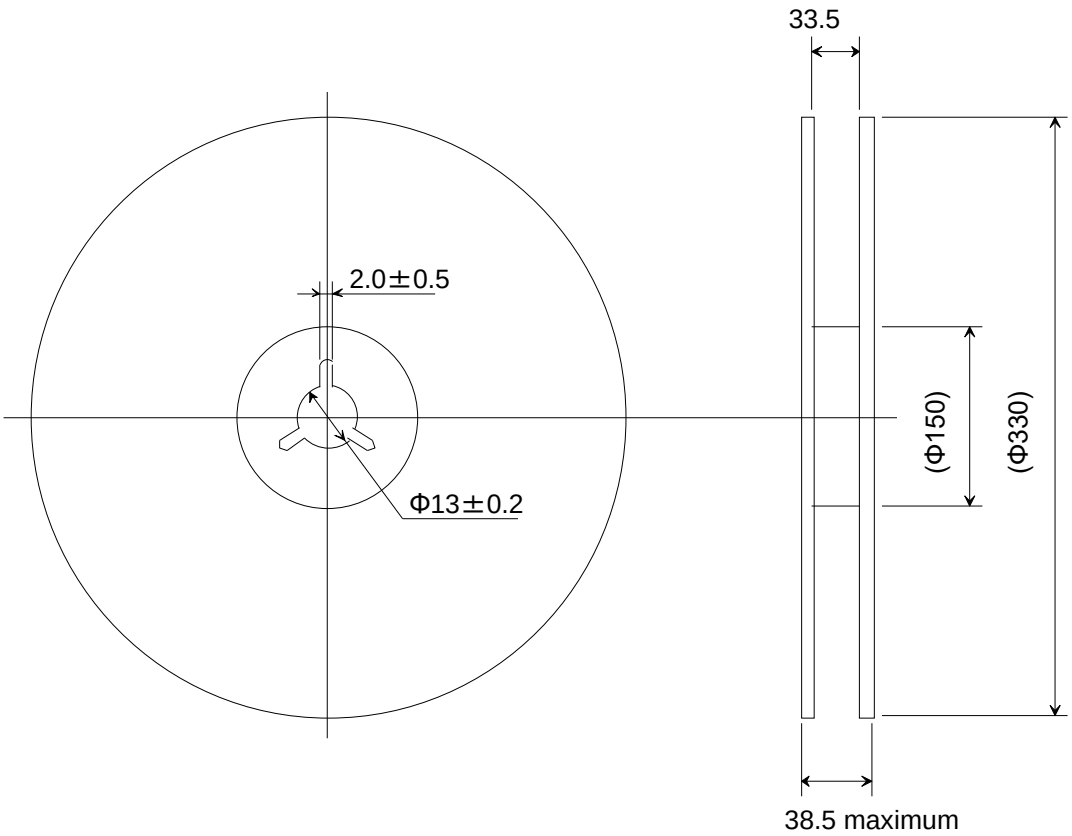

Downloaded from Arrow.com.

17.3 Taping Diagrams

Figure 14 shows the tapings diagrams.

Figure 14: Taping Diagrams

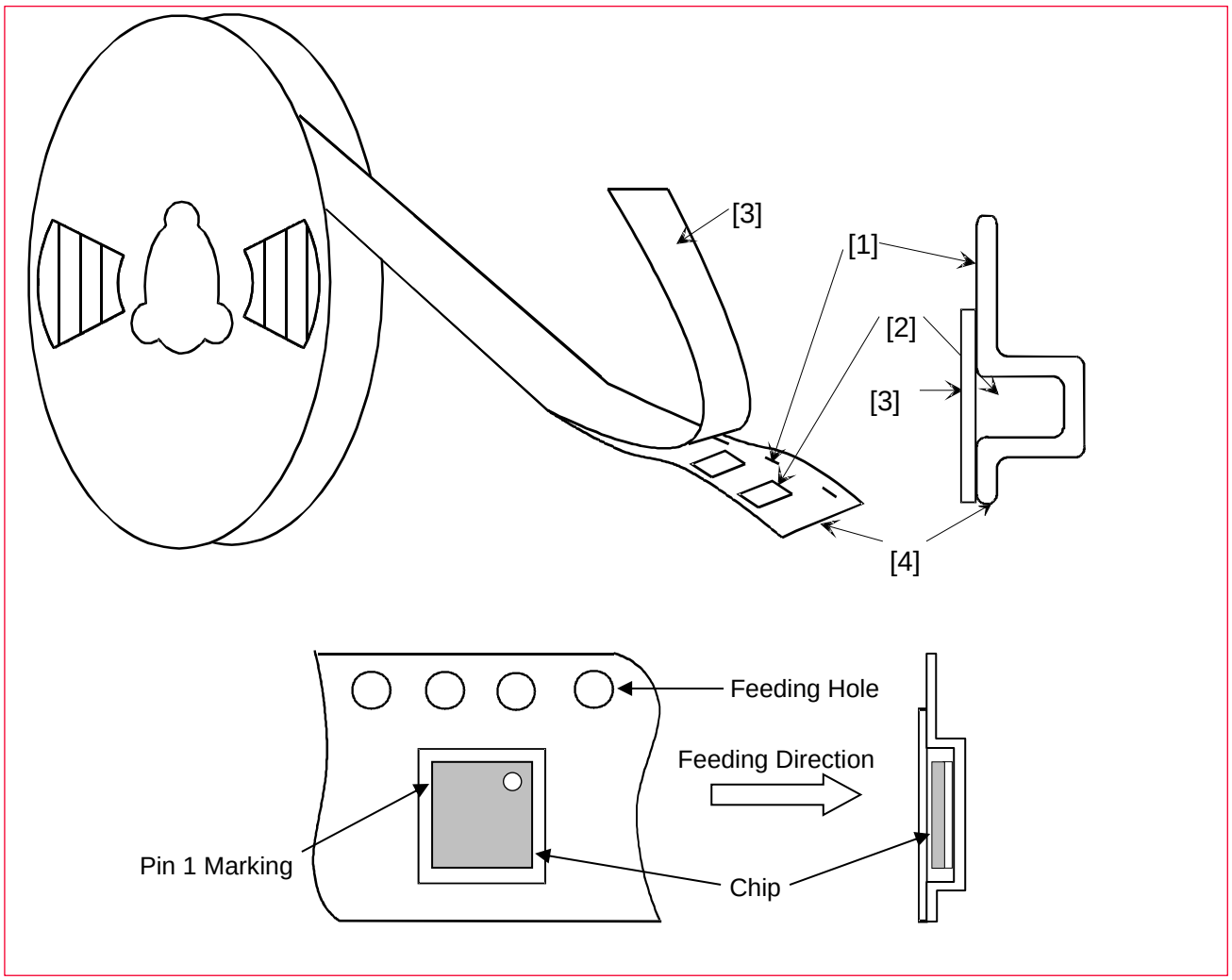

Table 26: Taping Specifications

Mark	Description
1	Feeding hole. As specified in Dimensions of Tape (Plastic tape).
2	Hole for Chip. As specified in Dimensions of Tape (Plastic tape).
3	Cover tape. 62 µm in thickness.
4	Base tape. As specified in Dimensions of Tape (Plastic tape).

Downloaded from Arrow.com.

17.4 Leader and Tail Tape

The leader and tail tape are shown in **Figure 15**.

Figure 15: Leader and Tail Tape

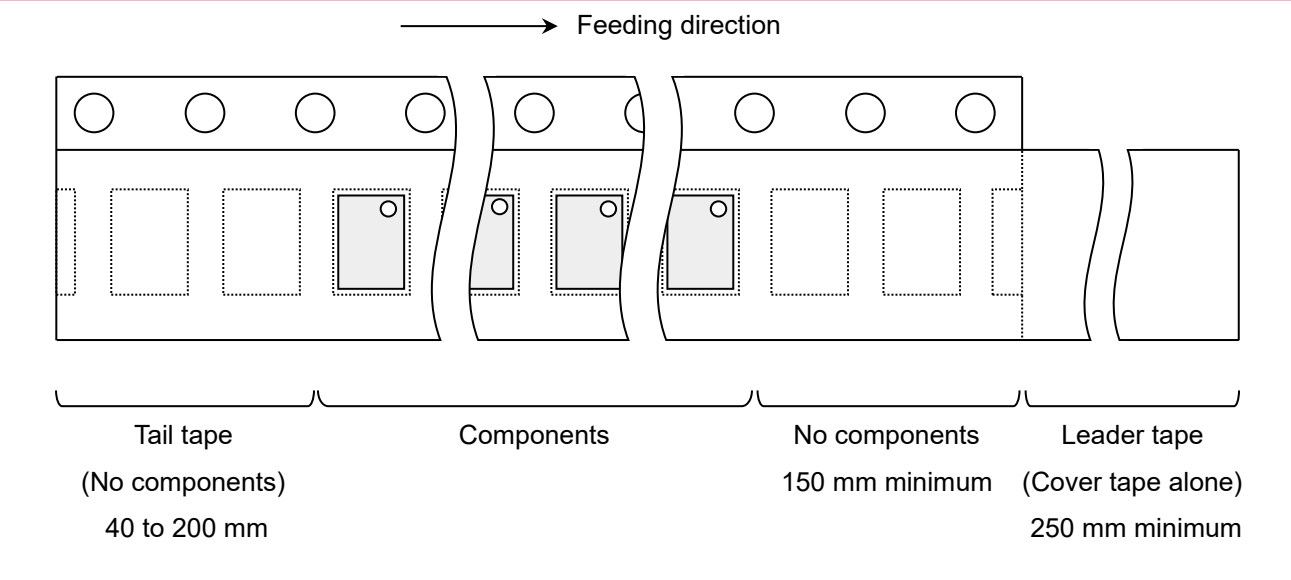

- The tape for chips is wound clockwise, the feeding holes to the right side as the tape is pulled toward the user.
- The cover tape and base tape are not adhered at no components area for 250 mm minimum
- Tear off strength against pulling of cover tape: 5 N minimum
- Packaging unit: 800 pcs. / Reel
- Tape material:
  - Base tape: Plastic
  - Reel: Plastic
  - Cover tape, cavity tape and reel are made the anti-static processing.
- Peeling off force: 1.3 N maximum in the direction of peeling as shown in **Figure 16**.

Figure 16: Peeling Force

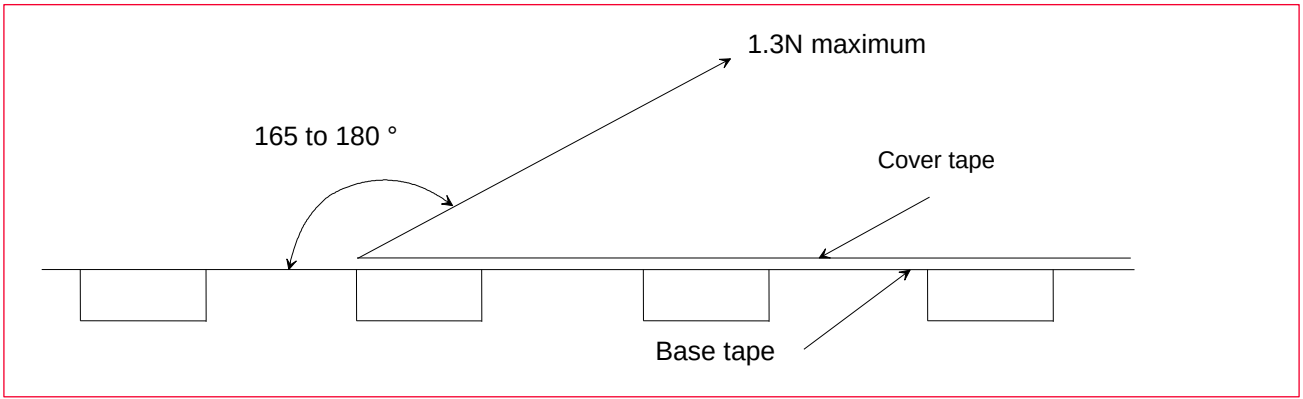

Downloaded from Arrow.com.

17.5 Packaging (Humidity Proof Packing)

Figure 17 shows the humidity proof packaging.

Figure 17: Humidity Proof Packaging

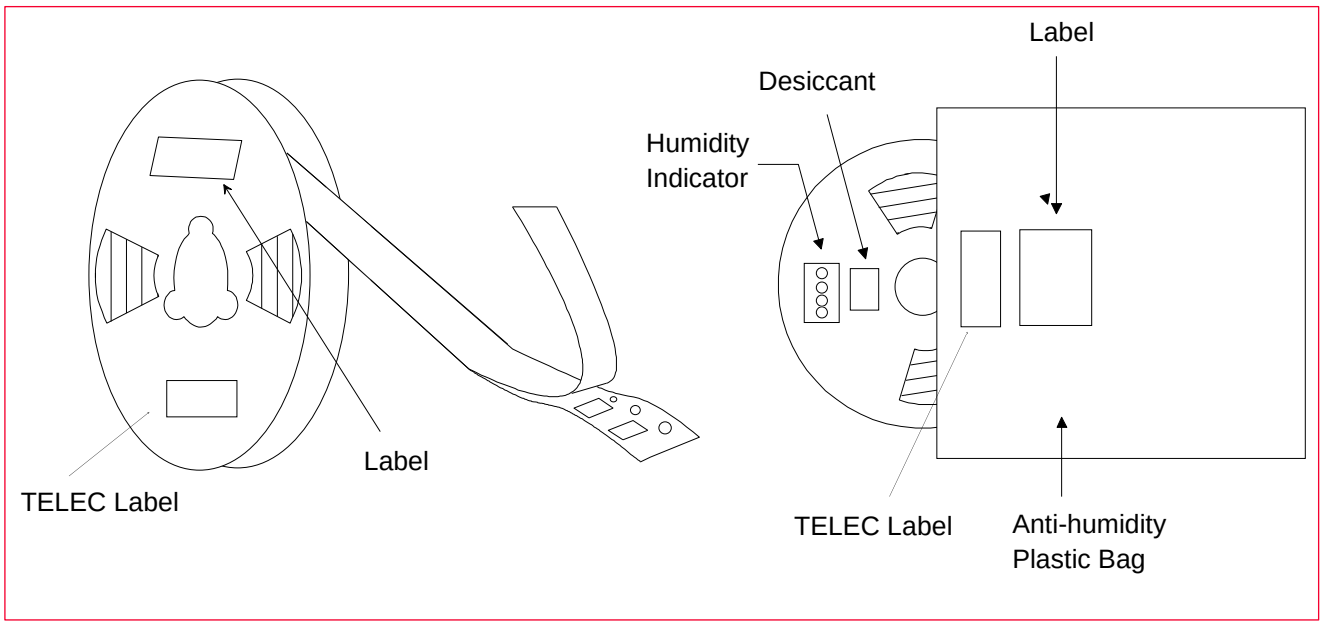

Tape and reel must be sealed with the anti-humidity plastic bag. The bag contains the desiccant and the humidity indicator.

Downloaded from Arrow.com.

18 Notice

18.1 Storage Conditions

- Please use this product within 6 months after receipt.
  - The product shall be stored without opening the packing under the ambient temperature from 5 to 35 °C and humidity from 20 ~ 70 %RH (Packing materials may be deformed at the temperature over 40 °C).
  - The product left more than 6 months after reception; it needs to be confirmed the solderability before used.
  - The product *must* be stored in noncorrosive gas (Cl_2, NH_3, SO_2, NO_X, etc.).
  - Any excess mechanical shock including, but not limited to, sticking the packing materials by sharp object and dropping the product, *must* not be applied in order not to damage the packing materials.
- This product is applicable to MSL3 (Based on JEDEC Standard J-STD-020)
  - After the packing opened, the product *must* be stored at ≤30 °C / <60 %RH and the product *should* be used within 168 hours after opening.
  - When the color of the indicator in the packing changed, the product shall be baked before soldering.
- Baking condition: 125 +5/-0 °C, 24 hours, 1 time
- The products must be baked on the heat-resistant tray because the material (Base Tape, Reel Tape and Cover Tape) is not heat-resistant.

18.2 Handling Conditions

- Be careful in handling or transporting products because excessive stress or mechanical shock may break products.
- Handle with care if products may have cracks or damages on their terminals. If there is any such damage, the characteristics of products may change. *Do not touch* products with bare hands that may result in poor solder ability and destroy by static electrical charge.

18.3 Standard PCB Design (Land Pattern and Dimensions)

- All the ground terminals should be connected to the ground patterns. Furthermore, the ground pattern should be provided between IN and OUT terminals. Please refer to the specifications for the standard land dimensions.
- The recommended land pattern and dimensions is as Murata's standard. The characteristics of products may vary depending on the pattern drawing method, grounding method, land dimensions, land forming method of the NC terminals and the PCB material and thickness. Therefore, be sure to verify the characteristics in the actual set. When using non-standard lands, contact Murata beforehand.

Downloaded from Arrow.com.

18.4 Notice for Chip Placer

When placing products on the PCB, products may be stressed and broken by uneven forces from a worn-out chucking locating claw or a suction nozzle. To prevent products from damages, be sure to follow the specifications for the maintenance of the chip placer being used. For the positioning of products on the PCB, be aware that mechanical chucking may damage products.

18.5 Soldering Conditions

The recommendation conditions of soldering are as in the following figure.

Soldering must be carried out by the above-mentioned conditions to prevent products from damage. Set up the highest temperature of reflow within 260 °C. Contact Murata before use if concerning other soldering conditions.

Figure 18: Reflow soldering standard conditions (Example)

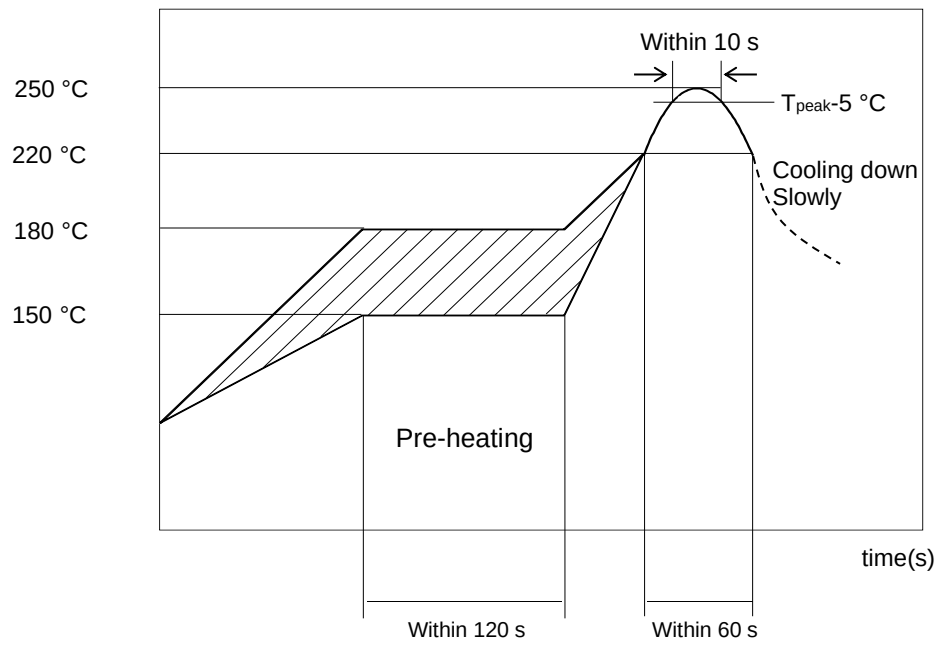

Please use the reflow within 2 times.

Use rosin type flux or weakly active flux with a chlorine content of 0.2 wt % or less.

18.6 Cleaning

Since this Product is Moisture Sensitive, any cleaning is not recommended. If any cleaning process is done the customer is responsible for any issues or failures caused by the cleaning process.

Downloaded from Arrow.com.

18.7 Operational Environment Conditions

Products are designed to work for electronic products under normal environmental conditions (ambient temperature, humidity, and pressure). Therefore, products have no problems to be used under the similar conditions to the above-mentioned. However, if products are used under the following circumstances, it may damage products and leakage of electricity and abnormal temperature may occur.

- In an atmosphere containing corrosive gas (Cl_2, NH_3, SO_X, NO_X etc.).
- In an atmosphere containing combustible and volatile gases.
- Dusty place.
- Direct sunlight place.
- Water splashing place.
- Humid place where water condenses.
- Freezing place.

If there are possibilities for products to be used under the preceding clause, consult with Murata before actual use.

Do not apply static electricity or excessive voltage while assembling and measuring, as it might be a cause of degradation or destruction to apply static electricity to products.

18.8 Input Power Capacity

Products shall be used in the input power capacity as specified in this specification.

Inform Murata beforehand, in case that the components are used beyond such input power capacity range.

Downloaded from Arrow.com.

19 Preconditions to Use Our Products

PLEASE READ THIS NOTICE BEFORE USING OUR PRODUCTS.

Please make sure that your product has been evaluated and confirmed from the aspect of the fitness for the specifications of our product when our product is mounted to your product.

All the items and parameters in this product specification/datasheet/catalog have been prescribed on the premise that our product is used for the purpose, under the condition and in the environment specified in this specification. You are requested not to use our product deviating from the condition and the environment specified in this specification.

Please note that the only warranty that we provide regarding the products is its conformance to the specifications provided herein. Accordingly, we shall not be responsible for any defects in products or equipment incorporating such products, which are caused under the conditions other than those specified in this specification.

WE HEREBY DISCLAIM ALL OTHER WARRANTIES REGARDING THE PRODUCTS, EXPRESS OR IMPLIED, INCLUDING WITHOUT LIMITATION ANY WARRANTY OF FITNESS FOR A PARTICULAR PURPOSE, THAT THEY ARE DEFECT-FREE, OR AGAINST INFRINGEMENT OF INTELLECTUAL PROPERTY RIGHTS.

You agree that you will use any and all software or program code (including but not limited to hcd, firmware, nvram, and blob) we may provide or to be embedded into our product (“Software”) provided that you use the Software bundled with our product. YOU AGREE THAT THE SOFTWARE SHALL BE PROVIDED TO YOU “AS IS” BASIS, MURATA MAKES NO REPRESENTATIONS OR WARRANTIES THAT THE SOFTWARE IS ERROR-FREE OR WILL OPERATE WITHOUT INTERRUPTION. AND MORE, MURATA MAKES NO REPRESENTATIONS OR WARRANTIES OF ANY KIND WHETHER EXPRESS OR IMPLIED WITH RESPECT TO THE SOFTWARE. MURATA EXPRESSLY DISCLAIM ANY AND ALL WARRANTIES OR CONDITIONS OF MERCHANTABILITY, FITNESS FOR A PARTICULAR PURPOSE NOR THE WARRANTY OF TITLE OR NON-INFRINGEMENT OF INTELLECTUAL PROPERTY RIGHTS.

You shall indemnify and hold harmless us, our affiliates, and our licensor from and against any and all claims, costs, expenses and liabilities (including attorney’s fees), which arise in connection with the using the Software.

The product shall not be used in any application listed below which requires especially high reliability for the prevention of such defect as may directly cause damage to the third party's life, body or property. You acknowledge and agree that, if you use our products in such applications, we will not be responsible for any failure to meet such requirements. Furthermore, YOU AGREE TO INDEMNIFY AND DEFEND US AND OUR AFFILIATES AGAINST ALL CLAIMS, DAMAGES, COSTS, AND EXPENSES THAT MAY BE INCURRED, INCLUDING WITHOUT LIMITATION, ATTORNEY FEES AND COSTS, DUE TO THE USE OF OUR PRODUCTS AND THE SOFTWARE IN SUCH APPLICATIONS.

- Aircraft equipment.
- Aerospace equipment.
- Undersea equipment.
- Power plant control equipment.
- Medical equipment.
- Traffic signal equipment.

Downloaded from Arrow.com.

- Burning / explosion control equipment.
- Disaster prevention / crime prevention equipment.
- Transportation equipment (vehicles, trains, ships, elevator, etc.).
- Application of similar complexity and/ or reliability requirements to the applications listed in the above.

We expressly prohibit you from analyzing, breaking, reverse-engineering, remodeling altering, and reproducing our product. Our product cannot be used for the product which is prohibited from being manufactured, used, and sold by the regulations and laws in the world.

We do not warrant or represent that any license, either express or implied, is granted under any our patent right, copyright, mask work right, or our other intellectual property right relating to any combination, machine, or process in which our products or services are used. Information provided by us regarding third-party products or services does not constitute a license from us to use such products or services or a warranty or endorsement thereof. Use of such information may require a license from a third party under the patents or other intellectual property of the third party, or a license from us under our patents or other intellectual property.

Please do not use our products, our technical information and other data provided by us for the purpose of developing of mass-destruction weapons and the purpose of military use.

Moreover, you must comply with "foreign exchange and foreign trade law", the "U.S. export administration regulations", etc.

Please note that we may discontinue the manufacture of our products, due to reasons such as end of supply of materials and/or components from our suppliers.

By signing on specification sheet or approval sheet, you acknowledge that you are the legal representative for your company and that you understand and accept the validity of the contents herein. When you are not able to return the signed version of specification sheet or approval sheet within 30 days from receiving date of specification sheet or approval sheet, it shall be deemed to be your consent on the content of specification sheet or approval sheet. Customer acknowledges that engineering samples may deviate from specifications and may contain defects due to their development status. We reject any liability or product warranty for engineering samples. In particular we disclaim liability for damages caused by

- The use of the engineering sample other than for evaluation purposes, particularly the installation or integration in the product to be sold by you,
- Deviation or lapse in function of engineering sample,
- Improper use of engineering samples.

We disclaim any liability for consequential and incidental damages.

If you can’t agree with the above contents, please contact sales.

Downloaded from Arrow.com.

Revision History

Revision Code	Date	Changed Item	Comment
		First version	
A	2022.09.20	Added the weight information. Updated the laser mark information on top side.	
B	2023.07.18	Updated with new format. Updated the more data of performance Updated the certification information	Update

Downloaded from Arrow.com.

Copyright © Murata Manufacturing Co., Ltd. All rights reserved. The information and content in this document are provided “as-is” with no warranties of any kind and are for informational purpose only. Data and information have been carefully checked and are believed to be accurate; however, no liability or responsibility for any errors, omissions, or inaccuracies is assumed.

Wi-Fi® is a registered trademark of Wi-Fi Alliance. The Bluetooth® word mark and logos are registered trademarks owned by Bluetooth SIG, Inc. Other brand and product names are trademarks or registered trademarks of their respective owners.

Specifications are subject to change without notice.

Downloaded from Arrow.com.